Mini PC
PB63 Series

User Manual

HIGH-DEFINITION MULTIMEDIA INTERFACE

E21979
First Edition
September 2023

COPYRIGHT INFORMATION

No part of this manual, including the products and software described in it, may be reproduced, transmitted, transcribed, stored in a retrieval system, or translated into any language in any form or by any means, except documentation kept by the purchaser for backup purposes, without the express written permission of ASUSTeK COMPUTER INC. ("ASUS").

ASUS PROVIDES THIS MANUAL "AS IS" WITHOUT WARRANTY OF ANY KIND, EITHER EXPRESS OR IMPLIED, INCLUDING BUT NOT LIMITED TO THE IMPLIED WARRANTIES OR CONDITIONS OF MERCHANTABILITY OR FITNESS FOR A PARTICULAR PURPOSE. IN NO EVENT SHALL ASUS, ITS DIRECTORS, OFFICERS, EMPLOYEES OR AGENTS BE LIABLE FOR ANY INDIRECT, SPECIAL, INCIDENTAL, OR CONSEQUENTIAL DAMAGES (INCLUDING DAMAGES FOR LOSS OF PROFITS, LOSS OF BUSINESS, LOSS OF USE OR DATA, INTERRUPTION OF BUSINESS AND THE LIKE), EVEN IF ASUS HAS BEEN ADVISED OF THE POSSIBILITY OF SUCH DAMAGES ARISING FROM ANY DEFECT OR ERROR IN THIS MANUAL OR PRODUCT.

Products and corporate names appearing in this manual may or may not be registered trademarks or copyrights of their respective companies, and are used only for identification or explanation and to the owners' benefit, without intent to infringe.

SPECIFICATIONS AND INFORMATION CONTAINED IN THIS MANUAL ARE FURNISHED FOR INFORMATIONAL USE ONLY, AND ARE SUBJECT TO CHANGE AT ANY TIME WITHOUT NOTICE, AND SHOULD NOT BE CONSTRUED AS A COMMITMENT BY ASUS. ASUS ASSUMES NO RESPONSIBILITY OR LIABILITY FOR ANY ERRORS OR INACCURACIES THAT MAY APPEAR IN THIS MANUAL, INCLUDING THE PRODUCTS AND SOFTWARE DESCRIBED IN IT.

Copyright © 2023 ASUSTeK COMPUTER INC. All Rights Reserved.

LIMITATION OF LIABILITY

Circumstances may arise where because of a default on ASUS' part or other liability, you are entitled to recover damages from ASUS. In each such instance, regardless of the basis on which you are entitled to claim damages from ASUS, ASUS is liable for no more than damages for bodily injury (including death) and damage to real property and tangible personal property; or any other actual and direct damages resulted from omission or failure of performing legal duties under this Warranty Statement, up to the listed contract price of each product.

ASUS will only be responsible for or indemnify you for loss, damages or claims based in contract, tort or infringement under this Warranty Statement.

This limit also applies to ASUS' suppliers and its reseller. It is the maximum for which ASUS, its suppliers, and your reseller are collectively responsible.

UNDER NO CIRCUMSTANCES IS ASUS LIABLE FOR ANY OF THE FOLLOWING: (1) THIRD-PARTY CLAIMS AGAINST YOU FOR DAMAGES; (2) LOSS OF, OR DAMAGE TO, YOUR RECORDS OR DATA; OR (3) SPECIAL, INCIDENTAL, OR INDIRECT DAMAGES OR FOR ANY ECONOMIC CONSEQUENTIAL DAMAGES (INCLUDING LOST PROFITS OR SAVINGS), EVEN IF ASUS, ITS SUPPLIERS OR YOUR RESELLER IS INFORMED OF THEIR POSSIBILITY.

SERVICE AND SUPPORT

Visit our multi-language web site at https://www.asus.com/support/

Contents

About this manual 5
Conventions used in this manual 6
Typography 6
Package contents 7

Getting to know your Mini PC

Features 10
Front view 10
Rear view 12

Using your Mini PC

Getting started 18
Mounting your Mini PC on the stand 18
Installing the front cover 19
Connect the AC power adapter to your Mini PC 20
Connect a display panel to your Mini PC 22
Connect the USB cable from keyboard or mouse 25
Turn on your Mini PC 26
Turning off your Mini PC 27
Putting your Mini PC to sleep 27
Entering BIOS Setup 27
Load default BIOS settings 28

Upgrading your Mini PC

Removing the top cover 30
Replacing the top cover 31
Installing 2.5″ HDD or SSD 32
Installing memory module(s) 35
Installing the CPU 38
Installing M.2 SSDs 42
Installing a wireless card 43

TPM

About the TPM 46

Contents

Appendix

Safety information....48
Setting up your system....49
Care during use....49
Safety Precautions....50
Regulatory notices....51
Service and Support....60

About this manual

This manual provides information about the hardware and software features of your Mini PC, organized through the following chapters:

Chapter 1: Getting to know your Mini PC

This chapter details the hardware components of your Mini PC.

Chapter 2: Using your Mini PC

This chapter provides you with information on using your Mini PC.

Chapter 3: Upgrading your Mini PC

This chapter provides you with information on how to upgrade the memory modules, wireless modules, and hard disk drive / solid state drive of your Mini PC.

Chapter 4: TPM

This chapter provides you with information on the TPM options.

Appendix

This section includes notices and safety statements your Mini PC.

Conventions used in this manual

To highlight key information in this manual, some text are presented as follows:

IMPORTANT! This message contains vital information that must be followed to complete a task.

NOTE: This message contains additional information and tips that can help complete tasks.

WARNING! This message contains important information that must be followed to keep you safe while performing certain tasks and prevent damage to your Mini PC's data and components.

Typography

Bold text	Indicates a menu or an item to select.
Italic	Indicates sections that you can refer to in this manual.

Package contents

Your Mini PC package contains the following items:

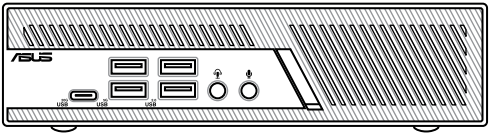

Mini PC

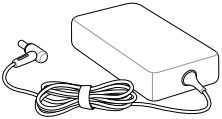

AC power adapter*

Power cord*

Technical documentation

NOTE:

- The most up-to-date and accurate product specifications are available on www.asus.com for download.
- Product and accessory images are for illustrative purposes only. The actual appearance and specifications may vary depending on the model.
- *The bundled power adapter may vary depending on the model and the country (or region) of sale.
- Some bundled accessories may vary depending on the model. For details on these accessories, refer to their respective user manuals.
- If the device or its components fail or malfunction during normal and proper use within the warranty period, bring the warranty card to the ASUS Service Center for replacement of the defective components.

1

Getting to know your Mini PC

Features

Front view

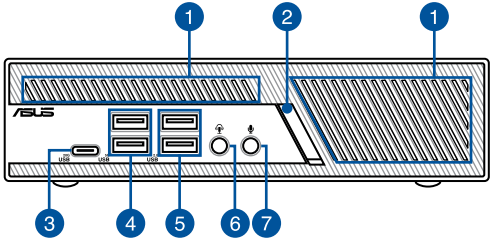

1 **Air vents (intake vent)**

The air vents allow cooler air to enter your Mini PC chassis.

> **IMPORTANT!** For optimal heat dissipation and air ventilation, ensure that the air vents are free from obstructions.

2 **Power button**

The power button allows you to turn the Mini PC on or off. You can use the power button to put your Mini PC to sleep mode or press it for four (4) seconds to force shutdown your Mini PC.

3 20G USB **USB 20Gbps port**

The USB (Universal Serial Bus) 20Gbps port provides the following:

- Transfer rate of up to 20 Gbit/s
- Backward compatible to USB 3.2
- USB power delivery with a maximum of 5V/3A output

4 5G USB

USB 5Gbps port

The USB (Universal Serial Bus) 5Gbps port provides a transfer rate up to 5 Gbit/s.

5 2.0 USB

USB 2.0 port

The USB (Universal Serial Bus) port is compatible with USB 2.0 or USB 1.1 devices, such as keyboards, pointing devices, flash disk drives, external HDDs, speakers, cameras and printers. This port also supports the Battery Charging 1.2 technology that allows you to charge your USB devices.

NOTE: Battery Charging 1.2 technology is only available on selected models.

6

Headphone/Headset jack

This port allows you to connect amplified speakers or headphones. You can also use this port to connect your headset.

7

Microphone jack

The microphone jack is designed to connect to a microphone used for video conferencing, voice narrations, or simple audio recordings.

Rear view

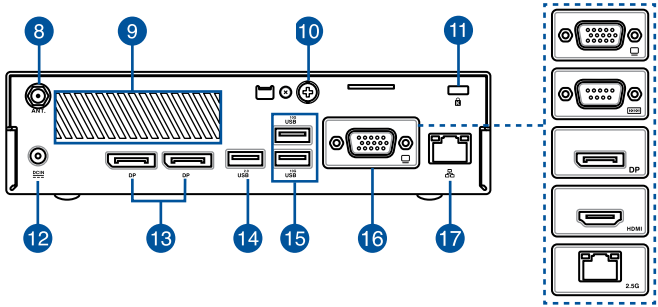

8 **Wireless antenna jack**

The jack is used to connect the supplied wireless antenna to enhance wireless signal reception.

9 **Air vents (exhaust vent)**

The air vents allow your Mini PC chassis to expel hot air.

IMPORTANT! For optimal heat dissipation and air ventilation, ensure that the air vents are free from obstructions.

WARNING! Be careful of the hot air expelled from the air vents as it may cause discomfort or injuries.

10 **Punch-out port**

Removing the metal cover allows you to install an external power button or CLRTC button.

11 **Kensington® security slot**

The Kensington® security slot allows you to secure your PC using Kensington® compatible security products.

12 DCIN **Power input**

The supplied power adapter converts AC power to DC power for use with this jack. Power supplied through this jack supplies power to the Mini PC. To prevent damage to the Mini PC, always use the supplied power adapter.

WARNING! The power adapter may become warm to hot when in use. Do not cover the adapter and keep it away from your body.

NOTE: The power adapter may vary between models and territories, please refer to the following information on the different adapters:

150W Power adapter: +20.0 V ⎓ 7.5 A; 150.0 W

120W Power adapter: +20.0 V ⎓ 6.0 A; 120.0 W

13 DP **DisplayPort**

This port allows you to connect your Mini PC to an external display.

NOTE: When using only this port as a display output source, this port will support a resolution of up to 5120 x 2160 @60Hz. The resolution may also be affected by the cabling and output device.

14 2.0 USB

USB 2.0 port

The USB (Universal Serial Bus) port is compatible with USB 2.0 or USB 1.1 devices, such as keyboards, pointing devices, flash disk drives, external HDDs, speakers, cameras, and printers.

15 10G USB

USB 10Gbps port

The USB (Universal Serial Bus) 10Gbps port provides a transfer rate up to 10 Gbit/s.

16

Configurable port

This port varies between models and consists of the following port options:

VGA port

This port allows you to connect your Mini PC to an external display.

NOTE: When using only this port as a display output source, this port will support a resolution of up to 1920 x 1200 @60Hz. The resolution may also be affected by the cabling and output device.

Serial (COM) connector

The 9-pin serial (COM) connector allows you to connect devices that have serial ports, such as mice, modems, and printers.

DP

DisplayPort

This port allows you to connect your Mini PC to an external display.

NOTE: When using only this port as a display output source, this port will support a resolution of up to 3840 x 2160 @60Hz. The resolution may also be affected by the cabling and output device.

HDMI

HDMI port

The HDMI (High Definition Multimedia Interface) port supports a Full-HD device, such as an LCD TV or monitor, to allow viewing on a larger external display.

NOTE: When using only this port as a display output source, this port will support a resolution of up to 4096 x 2160 @60Hz. The resolution may also be affected by the cabling and output device.

2.5G

LAN port

The 8-pin RJ-45 LAN port supports a standard Ethernet cable for 10/100/1000/2500 Mbps connection to a local network.

17

LAN port

The 8-pin RJ-45 LAN port supports a standard Ethernet cable for 10/100/1000 Mbps connection to a local network.

Left view

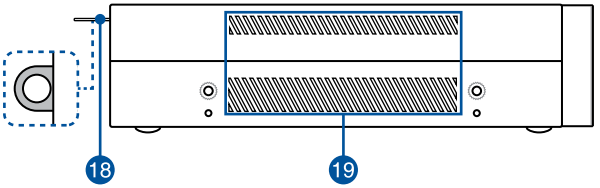

18 **Padlock ring**

This ring allows you to attach a standard padlock to prevent unauthorized disassembly of your Mini PC.

NOTE: The padlock is purchased separately.

19 **Air vents (intake vent)**

The air vents allow cooler air to enter your Mini PC chassis.

IMPORTANT! For optimal heat dissipation and air ventilation, ensure that the air vents are free from obstructions.

2

Using your Mini PC

Getting started

Mounting your Mini PC on the stand

To mount your Mini PC on the stand:

1. Locate the mounting holes at the bottom of your Mini PC.
2. Align the stand's mounting hole with the mounting hole on your Mini PC, then secure it in place with the stand screws.

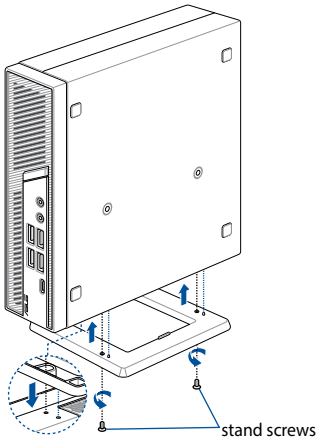

Installing the front cover

To install the front cover to your Mini PC:

1. Attach the front cover to the front of your Mini PC, ensuring the screw holes are properly aligned.

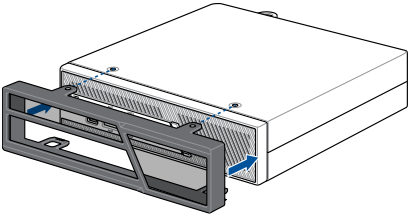

2. Secure the front cover using the two (2) bundled screws.

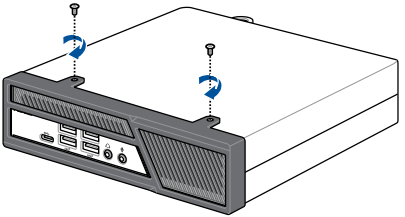

Connect the AC power adapter to your Mini PC

To connect the AC power adapter to your Mini PC:

A. Connect the power cord to the AC power adapter.

B. Connect the DC power connector into your Mini PC's power (DC) input.

C. Plug the AC power adapter into a 100V~240V power source.

NOTE: The power adapter may vary in appearance, depending on the model and the country (or region) of sale.

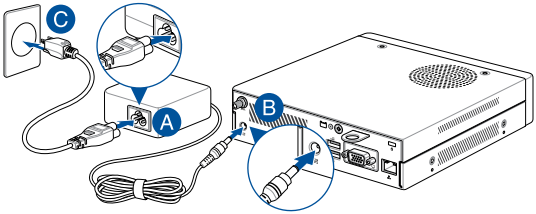

WARNING! The power adapter may become warm to hot when in use. Do not cover the adapter and keep it away from your body.

NOTE:

The power adapter may vary between models and territories, please refer to the following for more information on the different adapters:

150W Power adapter

- Input voltage: 100-240 Vac
- Input frequency: 50-60 Hz
- Rated output current: 7.5 A (150.0 W)
- Rated output voltage: 20.0 V

120W Power adapter

- Input voltage: 100-240 Vac
- Input frequency: 50-60 Hz
- Rated output current: 6.0 A (120.0 W)
- Rated output voltage: 20.0 V

Connect a display panel to your Mini PC

You can connect a display panel or projector to your Mini PC that has the following connectors:

- VGA port
- DisplayPort
- HDMI port

NOTE:

- Up to three display panels may be connected and displayed simultaneously, depending on model and selected options*.
- Using one of the ports listed below as the only display output source will provide the following maximum resolution**:
  - DisplayPort

    Supports a resolution of up to 5120 x 2160 @60Hz.
  - Configurable DisplayPort

    Supports a resolution of up to 3840 x 2160 @60Hz.
  - Configurable VGA port

    Supports a resolution of up to 1920 x 1200 @60Hz.
  - Configurable HDMI port

    Supports a resolution of up to 4096 x 2160 @60Hz.

*** The ports may vary depending on model. Refer to the Features section for the location of the ports.**

**** The maximum resolution may be affected by the cabling and output device.**

To connect a display panel to your Mini PC:

Connect one end of a VGA, DisplayPort, or HDMI cable to an external display, and the other end of the cable to your Mini PC's VGA port, DisplayPort, or an HDMI port.

Connect display via VGA port

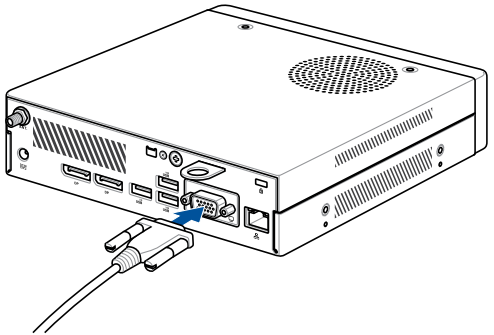

Connect display via DisplayPort

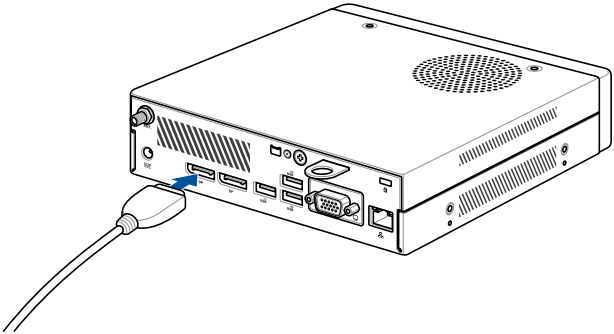

Connect display via HDMI port

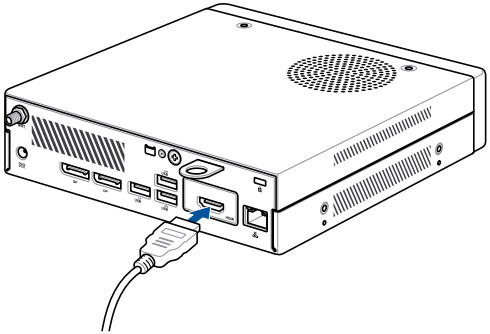

Connect the USB cable from keyboard or mouse

You can connect generally any USB keyboard and mouse to your Mini PC. You can also connect a USB dongle for a wireless keyboard and mouse set.

To connect a keyboard and mouse to your Mini PC:

Connect the USB cable from your keyboard and mouse to any of the USB ports of your Mini PC.

NOTE: The keyboard varies depending on the country (or region) of sale.

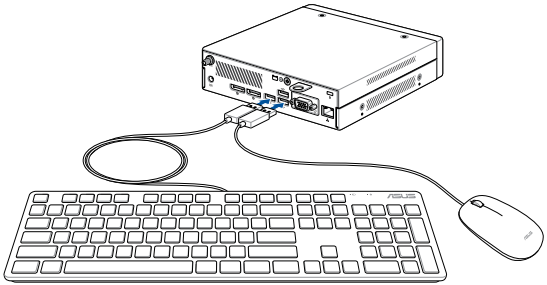

Turn on your Mini PC

Press the power button to turn on your Mini PC.

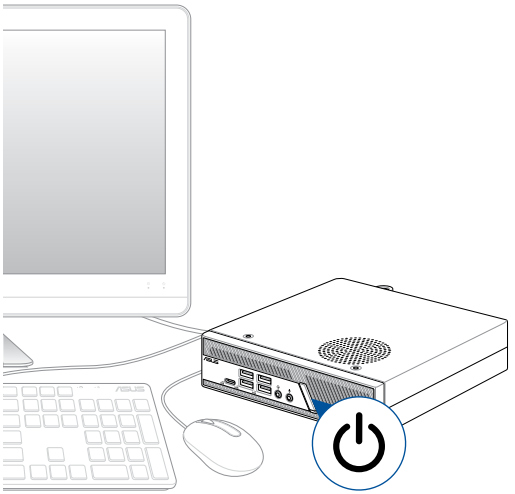

Turning off your Mini PC

If your Mini PC is unresponsive, press and hold the power button for at least four (4) seconds until your Mini PC turns off.

Putting your Mini PC to sleep

To set your Mini PC to enter Sleep mode by pressing the Power button once, search for **Control Panel** in the Windows Search Box, then navigate to **Hardware and Sound** > **Power Options** > **Choose what the power button does**, and set **When I press the power button** to **Sleep**.

Entering BIOS Setup

BIOS (Basic Input and Output System) stores system hardware settings that are needed for system startup on the Mini PC.

Under normal circumstances, the default BIOS settings apply to most conditions to ensure optimal performance. Do not change the default BIOS settings except in the following circumstances:

- An error message appears on the screen during the system bootup and requests you to run BIOS Setup.
- You have installed a new system component that requires further BIOS settings or update.

WARNING! Inappropriate BIOS settings may result in instability or boot failure. We strongly recommend that you change the BIOS settings only with the help of a trained service personnel.

Load default BIOS settings

To load the default values for each of the parameters in your BIOS:

1. Enter the BIOS by pressing <F2> or <DEL> from the POST screen.

   NOTE: POST (Power-On Self Test) is a series of software controlled diagnostic tests that run when you turn on your Mini PC.

2. Navigate to the **Exit** menu.
3. Select the **Load Optimized Defaults** option or press <F5>.
4. Select **OK** to load the default BIOS values.

3

Upgrading your Mini PC

IMPORTANT!

- It is recommended that you install or upgrade the memory modules, wireless card, and solid state drive (SSD), under professional supervision. Visit an ASUS service center for further assistance.
- Ensure that your hands are dry before proceeding with the rest of the installation process. Before installing any of the features in this guide, use a grounded wrist strap or touch a safely grounded object or metal object to avoid damaging them due to static electricity.

NOTE: The illustrations in this section are for reference only. The slots may vary depending on model.

Removing the top cover

1. Turn off your Mini PC then disconnect all cables and peripherals.
2. Remove the screw from the rear (A), then push the top cover towards the front to remove the top cover (B).

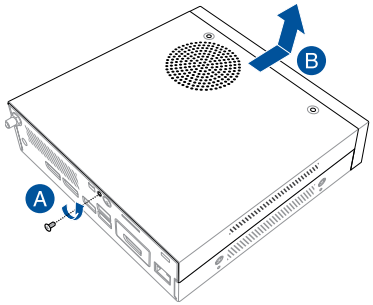

Replacing the top cover

Replace the top cover and push it towards the rear (A), then secure it with the screw removed previously (B).

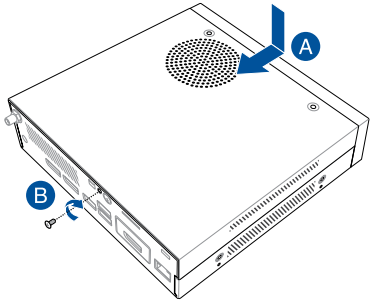

Installing 2.5” HDD or SSD

1. Remove the screw securing the storage bay (A), push the storage bay towards the front of the chassis (B) then lift it to remove it from the chassis (C).

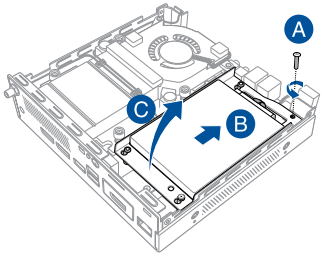

NOTE: Only follow steps 2 - 4 if your Mini PC comes pre-installed with a HDD or SSD.

2. (Optional) Lift the clip on the SATA connector (A), then remove the SATA cable (B).

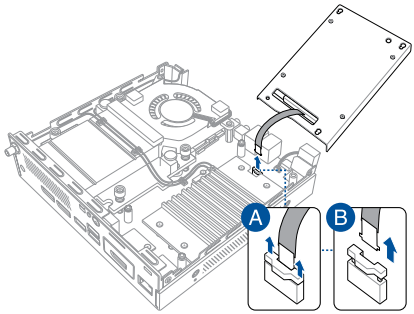

3. (Optional) Remove the four (4) screws securing the pre-installed HDD or SSD, then remove the HDD or SSD from the storage bay.

4. (Optional) Remove the SATA cable from the HDD or SSD.

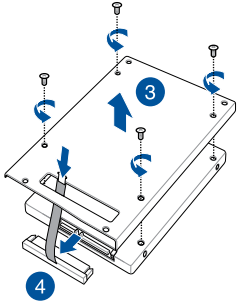

5. Insert your HDD or SSD into the storage bay, then secure it with four (4) screws.

6. Connect the SATA cable to the HDD or SSD.

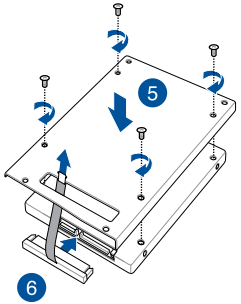

7. Lift the clip on the SATA connector (A), connect the SATA cable to the SATA connector, then push the clip down to secure the cable (B).

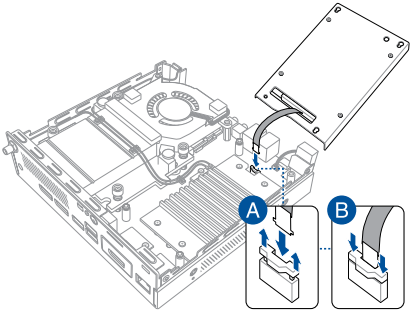

8. Align the storage bay to the storage bay stands in the chassis, then place the storage bay into the chassis and push it towards the rear of the chassis.

9. Secure the storage bay to the chassis using the screw removed previously

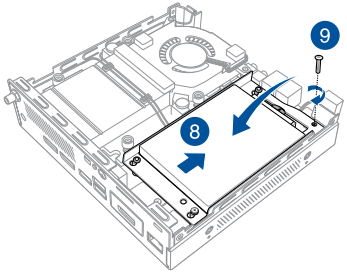

Installing memory module(s)

IMPORTANT!

- Refer to https://www.asus.com for the list of compatible DIMMs. You can only install DDR5 SO-DIMMs to the Mini PC's DIMM slot.
- Only ASUS-authorized technicians should remove and install motherboard and mechanical parts inside your Mini PC. Please refer to the terms and conditions in the warranty card.
- Visit an authorized ASUS service center or retailer for information on module upgrades for your Mini PC.

1. Follow steps 1 - 2 under the *Installing 2.5" HDD or SSD* section to remove the storage bay.
2. Lift the edge of the fan that is close to the front of the chassis (A), and slide the two (2) anti-vibration grommets on the fan out from the grommet slots (B).

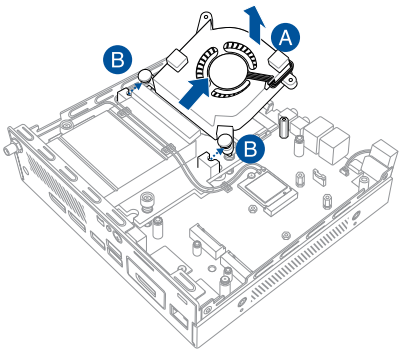

3. Flip the fan over towards the rear of the chassis, but do not remove the fan completely.

4. Prepare the memory module by applying the bundled EMI shielding tape to both sides, ensuring complete coverage of all RAM chips as shown.

NOTE: To improve bond strength, ensure that you apply firm pressure along the tape on both sides of the memory module, in particular to the corners and edges to prevent lifting or peeling.

5. Align and insert the memory module into the slot.

6. Press down until it is securely seated in place.

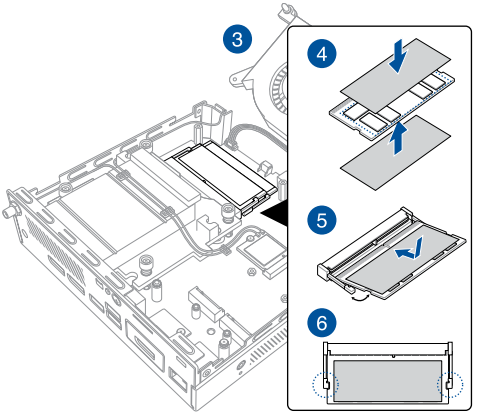

7. Repeat the same steps to install the other memory module.

8. Flip the fan over towards the front of the chassis. Align and then slide the two anti-vibration grommets on the fan into the grommet slots (A). Press the fan down firmly until the two protruding tabs lock securely onto the two standoffs on the motherboard (B).

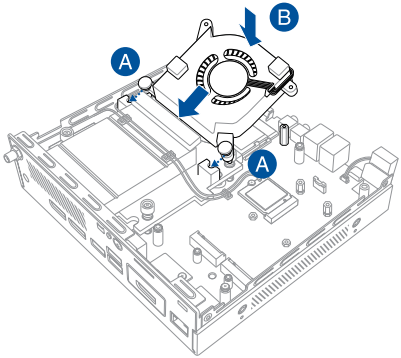

Installing the CPU

IMPORTANT!

- Refer to https://www.asus.com for the list of compatible CPUs.
- Only ASUS-authorized technicians should remove and install motherboard and mechanical parts inside your Mini PC. Please refer to the terms and conditions in the warranty card.
- Visit an authorized ASUS service center or retailer for information on module upgrades for your Mini PC.

1. Follow steps 1 - 3 under the *Installing memory module(s)* section to prepare removing the fan module.

2. (Optional) Disconnect the antennas from the wireless card, if a wireless card is installed (A), and remove the antenna cables from the cable holder clips (B).

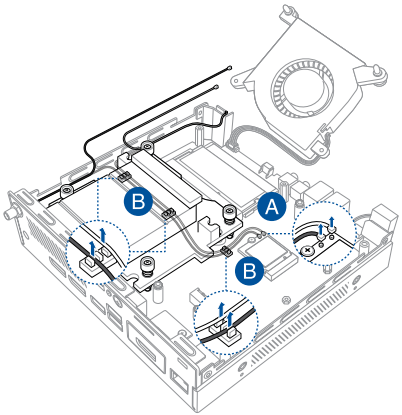

3. Loosen the four (4) screws securing the CPU backplate, and then remove it as shown.

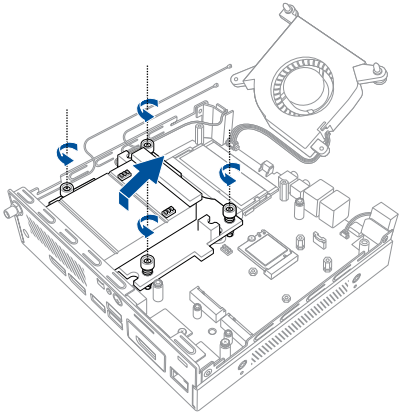

4. Press the load lever on the CPU socket down with your thumb (A), and move it to the right until it is released from the retention tab. Lift the load lever until the load plate is completely lifted (B).

5. Position the CPU above the socket, ensuring that the gold triangle mark is on the bottom-left corner of the socket, then fit the CPU notches to the socket's alignment keys (C). Close the load plate, ensuring that the front edge of the load plate slides under the retention lock then push down the load lever (D).

6. Apply Thermal Interface Material (TIM) to the CPU before you install the CPU backplate (E).

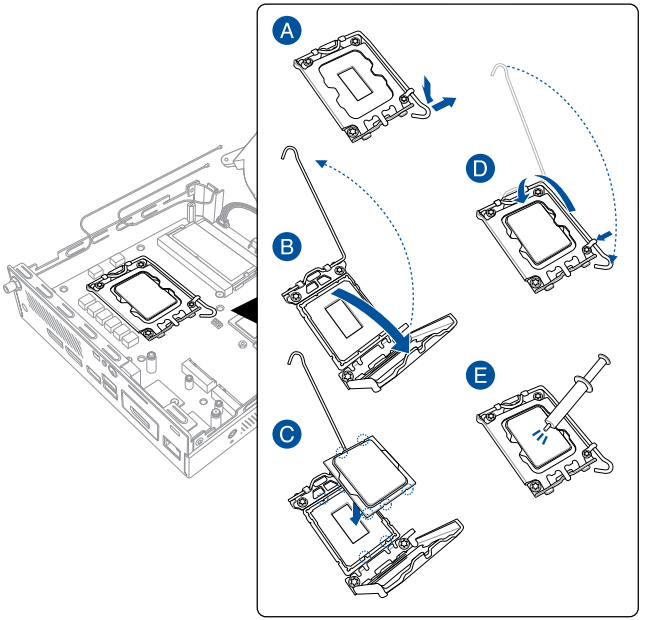

WARNING! The TIM is toxic and inedible. DO NOT eat it. If it gets into your eyes or touches your skin, wash it off immediately, and seek professional medical help.

IMPORTANT! To prevent contaminating the TIM, DO NOT spread it with your finger.

7. Align and place the CPU backplate over the screw holes. Secure the CPU backplate using the four (4) screws one by one in a diagonal sequence as shown.

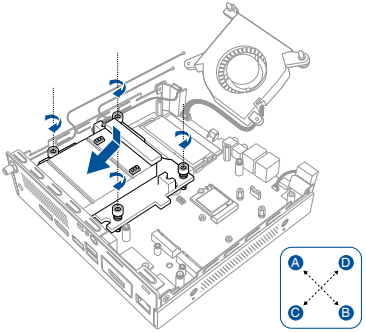

8. (Optional) Reconnect the antennas to your wireless card (A), and organize your antenna cables with the cable holder clips (B).

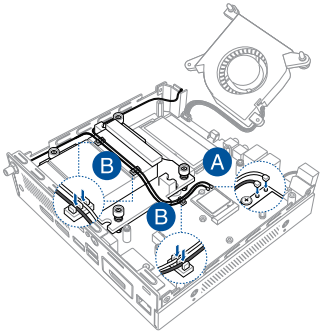

Installing M.2 SSDs

1. (Optional) Remove the storage bay if a storage bay is installed. Follow steps 1 - 2 under the *Installing 2.5" HDD or SSD* section to remove the storage bay.
2. Remove the four (4) screws securing the heatsink, and then remove the heatsink.
3. Align and insert an M.2 SSD into one of the two slots inside the Mini PC.
4. Secure the M.2 SSD with the bundled screw.
5. Repeat steps 3 and 4 to install a second M.2 SSD.
6. Before replacing the heatsink, ensure to remove the plastic film strip(s) from the thermal pad(s) adhered to the back of the heatsink that corresponds to the installed M.2 SSD(s).
7. Reinstall the heatsink using the four (4) screws removed previously.

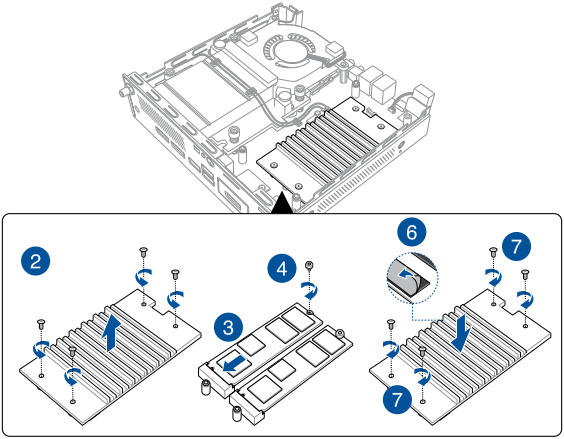

Installing a wireless card

NOTE: Your Mini PC includes a M.2 slot for 2230 wireless and Bluetooth modules. Refer to https://www.asus.com for the list of compatible wireless and Bluetooth modules.

1. Follow steps 1 - 2 under the *Installing 2.5" HDD or SSD* section to remove the storage bay.
2. Align and insert a wireless card into its slot inside the Mini PC.
3. Gently push down the wireless card on top of the screw hole and fasten it using a bundled screw.
4. (Optional) Connect the antennas to your wireless card.
5. (Optional) Organize the antenna cables using the cable holders in the Mini PC.

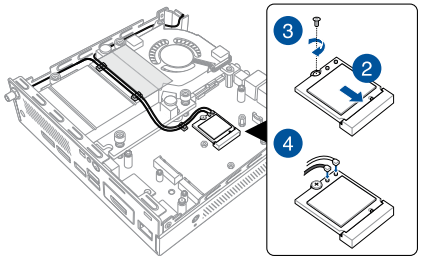

4

TPM

About the TPM

The system comes with two (2) TPM options: firmware TPM (fTPM) or the discrete TPM (dTPM). The dTPM is an onboard chip and the availability of the onboard dTPM chip may vary between models.

NOTE:

- The fTPM is supported by default, but may not be enabled, for more information on enabling the TPM, please refer to www.asus.com/support.
- The dTPM is optional and is available on selected models

You may use the following methods to check whether your system comes with dTPM:

- Using the Windows Security App

  a. Navigate to **Start** > **Settings** > **Update & Security** > **Windows Security** > **Device Security**.

  b. Check if there is a **Security Processor** section on this screen, if there is no **Security Processor** section on this screen, there may not be a dTPM on this model, or the dTPM may be disabled.

- Using the Microsoft Management Console

  a. Navigate to **Start** > **Run** or press **[Windows Key]** + **R**.

  b. Type `tpm.msc`, then choose **OK**.

  c. If you see a message confirming TPM is ready to use, then there is a dTPM available and enabled. If you see a message saying "Compatible TPM cannot be found", there may not be a dTPM on this model, or the dTPM may be disabled.

For more information on TPM, please refer to FAQ at www.asus.com/support/.

Appendix

Safety information

Your Mini PC is designed and tested to meet the latest standards of safety for information technology equipment. However, to ensure your safety, it is important that you read the following safety instructions.

- Do not ingest battery, Chemical Burn Hazard.
- This product contains a coin / button cell battery. If the coin /button cell battery is swallowed, it can cause severe internal burns in just 2 hours and can lead to death.
- Keep new and used batteries away from children.
- If the battery compartment does not close securely, stop using the product and keep it away from children.
- If you think batteries might have been swallowed or placed inside any part of the body, seek immediate medical attention.

Lithium-Ion Battery Warning

CAUTION! Danger of explosion if battery is incorrectly replaced. Replace only with the same or equivalent type recommended by the manufacturer. Dispose of used batteries according to the manufacturer's instructions.

NO DISASSEMBLY

The warranty does not apply to the products that have been disassembled by users

Setting up your system

- Read and follow all instructions in the documentation before you operate your system.
- Do not use this product near water or a heated source.
- Set up the system on a stable surface.
- Openings on the chassis are for ventilation. Do not block or cover these openings. Make sure you leave plenty of space around the system for ventilation. Never insert objects of any kind into the ventilation openings.
- Use this product in environments with ambient temperatures between 0˚C and 35˚C.
- If you use an extension cord, make sure that the total ampere rating of the devices plugged into the extension cord does not exceed its ampere rating.
- This product should be connected by means of a power cord to a socket-outlet with earthing connection.
- This equipment should be installed and operated with a minimum distance of 20 cm between the radiator and your body.

Care during use

- Do not walk on the power cord or allow anything to rest on it.
- Do not spill water or any other liquids on your system.
- When the system is turned off, a small amount of electrical current still flows. Always unplug the power cord from the power outlets before cleaning the system.
- If you encounter the following technical problems with the product, unplug the power cord and contact a qualified service technician or your retailer.
  - The power cord or plug is damaged.
  - Liquid has been spilled into the system.
  - The system does not function properly even if you follow the operating instructions.
  - The system was dropped or the cabinet is damaged.
  - The system performance changes.

- Avoid contact with hot components inside the Mini PC. During operation, some components become hot enough to burn the skin. Before you open the computer cover, turn off the computer, disconnect the power, and wait approximately 30 minutes for the components to cool.
- Disposal of a battery into fire or a hot oven, or mechanically crushing or cutting of a battery, that can result in an explosion;
- Leaving a battery in an extremely high temperature surrounding environment that can result in an explosion or the leakage of flammable liquid or gas;
- A battery subjected to extremely low air pressure that may result in an explosion or the leakage of flammable liquid or gas.

Safety Precautions

Accessories that came with this product have been designed and verified for the use in connection with this product. Never use accessories for other products to prevent the risk of electric shock or fire.

安全上のご注意

付属品は当該専用品です。他の機器には使用しないでください。機器の破損もしくは、火災や感電の原因となることがあります。

Regulatory notices

COATING NOTICE

IMPORTANT! To provide electrical insulation and maintain electrical safety, a coating is applied to insulate the device except on the areas where the I/O ports are located.

Federal Communications Commission Statement

This device complies with Part 15 of the FCC Rules. Operation is subject to the following two conditions:

- This device may not cause harmful interference, and
- This device must accept any interference received including interference that may cause undesired operation.

This equipment has been tested and found to comply with the limits for a Class B digital device, pursuant to Part 15 of the FCC Rules. These limits are designed to provide reasonable protection against harmful interference in a residential installation.

This equipment generates, uses and can radiate radio frequency energy and, if not installed and used in accordance with manufacturer's instructions, may cause harmful interference to radio communications. However, there is no guarantee that interference will not occur in a particular installation. If this equipment does cause harmful interference to radio or television reception, which can be determined by turning the equipment off and on, the user is encouraged to try to correct the interference by one or more of the following measures:

- Reorient or relocate the receiving antenna.
- Increase the separation between the equipment and receiver.
- Connect the equipment to an outlet on a circuit different from that to which the receiver is connected.
- Consult the dealer or an experienced radio/TV technician for help.

IMPORTANT! Outdoor operations in the 5.15~5.25 GHz band is prohibited. This device has no Ad-hoc capability for 5250~5350 and 5470~5725 MHz.

FCC RF Caution Statement

CAUTION! Any changes or modifications not expressly approved by the party responsible for compliance could void your authority to operate the equipment.

FCC RF Exposure Information

This device meets the government's requirements for exposure to radio waves. This device is designed and manufactured not to exceed the emission limits for exposure to radio frequency (RF) energy set by the Federal Communications Commission of the U.S. Government. The exposure standard employs a unit of measurement known as the Specific Absorption Rate, or SAR. The SAR limit set by the FCC is 1.6 W/kg. Tests for SAR are conducted using standard operating positions accepted by the FCC with the EUT transmitting at the specified power level in different channels. The FCC has granted an Equipment Authorization for this device with all reported SAR levels evaluated as in compliance with the FCC RF exposure guidelines. SAR information on this device is on file with the FCC and can be found under the Display Grant section of www.fcc.gov/oet/ea/fccid.

RF Exposure Warning

This equipment must be installed and operated in accordance with provided instructions and the antenna(s) used for this transmitter must be installed to provide a separation distance of at least 20 cm from all persons and must not be co-located or operating in conjunction with any other antenna or transmitter. End-users and installers must be provide with antenna installation instructions and transmitter operating conditions for satisfying RF exposure compliance.

FCC Wi-Fi 6E Caution Statement

FCC regulations restrict the operation of this device to indoor use only. The operation of this device is prohibited on oil platforms, cars, trains, boats, and aircraft, except that operation of this device is permitted in large aircraft while flying above 10,000 feet.

ISED Wi-Fi 6E Caution Statement (RLAN devices)

Devices shall not be used for control of or communications with unmanned aircraft systems.

Les dispositifs ne doivent pas être utilisés pour commander des systèmes d'aéronef sans pilote ni pour communiquer avec de tels systèmes.

ISED Radiation Exposure Statement for Canada

This equipment complies with ISED radiation exposure limits set forth for an uncontrolled environment. To maintain compliance with ISED RF exposure compliance requirements, please avoid direct contact to the transmitting antenna during transmitting. End users must follow the specific operating instructions for satisfying RF exposure compliance.

Operation is subject to the following two conditions:

- This device may not cause interference and
- This device must accept any interference, including interference that may cause undesired operation of the device.

HDMI Trademark Notice

The terms HDMI, HDMI High-Definition Multimedia Interface, and the HDMI Logo are trademarks or registered trademarks of HDMI Licensing Administrator, Inc.

Compliance Statement of Innovation, Science and Economic Development Canada (ISED)

This device complies with Innovation, Science and Economic Development Canada licence exempt RSS standard(s). Operation is subject to the following two conditions: (1) this device may not cause interference, and (2) this device must accept any interference, including interference that may cause undesired operation of the device.

CAN ICES-003(B)/NMB-003(B)

Déclaration de conformité de Innovation, Sciences et Développement économique Canada (ISED)

Le présent appareil est conforme aux CNR d'Innovation, Sciences et Développement économique Canada applicables aux appareils radio exempts de licence. L'exploitation est autorisée aux deux conditions suivantes : (1) l'appareil ne doit pas produire de brouillage, et (2) l'utilisateur de l'appareil doit accepter tout brouillage radioélectrique subi, même si le brouillage est susceptible d'en compromettre le fonctionnement.

CAN ICES-003(B)/NMB-003(B)

Wireless Operation Channel for Different Domains

N. America	2.412-2.462 GHz	Ch01 through CH11
Japan	2.412-2.484 GHz	Ch01 through Ch14
Europe ETSI	2.412-2.472 GHz	Ch01 through Ch13

Declaration of compliance for product environmental regulation

ASUS follows the green design concept to design and manufacture our products, and makes sure that each stage of the product life cycle of ASUS product is in line with global environmental regulations. In addition, ASUS disclose the relevant information based on regulation requirements.

Please refer to https://csr.asus.com/Compliance.htm for information disclosure based on regulation requirements ASUS is complied with:

EU REACH and Article 33

Complying with the REACH (Registration, Evaluation, Authorization, and Restriction of Chemicals) regulatory framework, we publish the chemical substances in our products at ASUS REACH website at https://csr.asus.com/english/REACH.htm

EU RoHS

This product complies with the EU RoHS Directive. For more details, see https://csr.asus.com/english/article.aspx?id=35

Japan JIS-C-0950 Material Declarations

Information on Japan RoHS (JIS-C-0950) chemical disclosures is available on https://csr.asus.com/english/article.aspx?id=19

India RoHS

This product complies with the "India E-Waste (Management) Rules, 2016" and prohibits use of lead, mercury, hexavalent chromium, polybrominated biphenyls (PBBs) and polybrominated diphenyl ethers (PBDEs) in concentrations exceeding 0.1% by weight in homogenous materials and 0.01% by weight in homogenous materials for cadmium, except for the exemptions listed in Schedule II of the Rule.

Vietnam RoHS

ASUS products sold in Vietnam, on or after September 23, 2011,meet the requirements of the Vietnam Circular 30/2011/TT-BCT.

Các sản phẩm ASUS bán tại Việt Nam, vào ngày 23 tháng 9 năm2011 trở về sau, đều phải đáp ứng các yêu cầu của Thông tư 30/2011/TT-BCT của Việt Nam.

Türkiye RoHS
AEEE Yönetmeliğine Uygundur

ASUS Recycling/Takeback Services
ASUS recycling and takeback programs come from our commitment to the highest standards for protecting our environment. We believe in providing solutions for you to be able to responsibly recycle our products, batteries, other components as well as the packaging materials. Please go to https://csr.asus.com/english/Takeback.htm for detailed recycling information in different regions.

Ecodesign Directive
European Union announced a framework for the setting of ecodesign requirements for energy-related products (2009/125/EC). Specific Implementing Measures are aimed at improving environmental performance of specific products or across multiple product types. ASUS provides product information on the CSR website. The further information could be found at https://csr.asus.com/english/article.aspx?id=1555.

DO NOT throw the device in municipal waste. This product has been designed to enable proper reuse of parts and recycling. This symbol of the crossed out wheeled bin indicates that the product (electrical, electronic equipment, and mercury-containing button cell battery) should not be placed in municipal waste. Check local technical support services for product recycling.

EPEAT (Electronic Product Environmental Assessment Tool) registered products
The public disclosure of key environmental information for ASUS EPEAT registered products is available on CSR website https://csr.asus.com/english/article.aspx?id=41. More information about EPEAT program and purchaser guidance can be found on the EPEAT website www.epeat.net.

ENERGY STAR® Qualified Product

ENERGY STAR® is a joint program of the U.S. Environmental Protection Agency and the U.S. Department of Energy helping us all save money and protect the environment through energy efficient products and practices.

All ASUS products with the ENERGY STAR® logo comply with the ENERGY STAR® standard, and the power management feature is enabled by default. The monitor is automatically set to sleep within 10 minutes of user inactivity; the computer is automatically set to sleep within 30 minutes of user inactivity. To wake your computer, click the mouse, press any key on the keyboard, or press the power button.

Please visit http://www.energystar.gov/powermanagement for detail information on power management and its benefits to the environment. In addition, please visit http://www.energystar.gov for detail information on the ENERGY STAR® joint program.

NOTE: ENERGY STAR® is NOT supported on FreeDOS and Linux-based products.

Simplified EU Declaration of Conformity

ASUSTek Computer Inc. hereby declares that this device is in compliance with the essential requirements and other relevant provisions of Directive 2014/53/EU. Full text of EU declaration of conformity is available at https://www.asus.com/support/.

The WiFi operating in the band 5150-5350 MHz shall be restricted to indoor use for countries listed in the table below:

a. Low Power Indoor (LPI) Wi-Fi 6E devices:
The device is restricted to indoor use only when operating in the 5945 to 6425 MHz frequency range in Belgium (BE), Bulgaria (BG), Cyprus (CY), Czech Republic (CZ), Estonia (EE), France (FR), Iceland (IS), Ireland (IE), Lithuania (LT), Germany (DE), Netherlands (NL), Spain (ES), Denmark (DK), Italy (IT), Sweden (SE), Switzerland (CH) & Slovenia (SI).

b. Very Low Power (VLP) Wi-Fi 6E devices (portable devices):
The device is not permitted to be used on Unmanned Aircraft Systems (UAS) when operating in the 5945 to 6425 MHz frequency range in Belgium (BE), Bulgaria (BG), Cyprus (CY), Czech Republic (CZ), Estonia (EE), France (FR), Iceland (IS), Ireland (IE), Lithuania (LT), Germany (DE), Netherlands (NL), Spain (ES), Denmark (DK), Italy (IT), Sweden (SE), Switzerland (CH) & Slovenia (SI).

AT	BE	BG	CZ	DK	EE	FR
DE	IS	IE	IT	EL	ES	CY
LV	LI	LT	LU	HU	MT	NL
NO	PL	PT	RO	SI	SK	TR
FI	SE	CH	HR	UK(NI)		

CE

Simplified UKCA Declaration of Conformity

ASUSTek Computer Inc. hereby declares that this device is in compliance with the essential requirements and other relevant provisions of The Radio Equipment Regulations 2017 (S.I. 2017/1206). Full text of UKCA declaration of conformity is available at https://www.asus.com/support/.

The WiFi operating in the band 5150-5350 MHz shall be restricted to indoor use for the country listed below:

UK

a. Low Power Indoor (LPI) Wi-Fi 6E devices:
The device is restricted to indoor use only when operating in the 5925 to 6425 MHz frequency range in UK.

b. Very Low Power (VLP) Wi-Fi 6E devices (portable devices):
The device is not permitted to be used on Unmanned Aircraft Systems (UAS) when operating in the 5925 to 6425 MHz frequency range in UK.

Wi-Fi Network Notice

IMPORTANT! Wi-Fi 6E network card is available on selected models. The connectivity of Wi-Fi 6E band may vary according to the regulation and certification of each country/region.

Service and Support

Visit our multi-language website at https://www.asus.com/support/.