ASRock

# B760M-HDV/M.2

User Manual

## Contact Information

If you need to contact ASRock or want to know more about ASRock, you're welcome to visit ASRock's website at http://www.asrock.com; or you may contact your dealer for further information. For technical questions, please submit a support request form at https://event.asrock.com/tsd.asp

**ASRock Incorporation**

e-mail: info@asrock.com.tw

**ASRock EUROPE B.V.**

e-mail: sales@asrock.nl

**ASRock America, Inc.**

e-mail: sales@asrockamerica.com

Scan the QR code to view more manuals and documents.

# Contents

**Chapter 1 Introduction** **1**

1.1 Package Contents 1

1.2 Specifications 2

1.3 Motherboard Layout 6

1.4 I/O Panel 8

1.5 Block Diagram 9

**Chapter 2 Installation** **10**

2.1 Installing the CPU 11

2.2 Installing the CPU Fan and Heatsink 13

2.3 Installing Memory Modules (DIMM) 14

2.4 Connecting the Front Panel Header 16

2.5 Installing the I/O Panel Shield 17

2.6 Installing the Motherboard 18

2.7 Installing SATA Drives 19

2.8 Installing a Graphics Card 21

2.9 Connecting Peripheral Devices 23

2.10 Connecting the Power Connectors 24

2.11 Power On 25

2.12 Jumpers Setup 26

2.13 Onboard Headers and Connectors 27

2.14 M.2 WiFi/BT PCIe WiFi Module Installation Guide 37

2.15 M.2 SSD Module Installation Guide (M2_1) 39

2.16 M.2 SSD Module Installation Guide (M2_2) 41

# Chapter 1 Introduction

Thank you for purchasing ASRock B760M-HDV/M.2 motherboard, a reliable motherboard produced under ASRock's consistently stringent quality control. It delivers excellent performance with robust design conforming to ASRock's commitment to quality and endurance.

*Because the motherboard specifications and the BIOS software might be updated, the content of this documentation will be subject to change without notice. In case any modifications of this documentation occur, the updated version will be available on ASRock's website without further notice. If you require technical support related to this motherboard, please visit our website for specific information about the model you are using. You may find the latest VGA cards and CPU support list on ASRock's website as well. ASRock website http://www.asrock.com.*

## 1.1 Package Contents

- ASRock B760M-HDV/M.2 Motherboard (Micro ATX Form Factor)
- ASRock B760M-HDV/M.2 User Manual
- 1 x I/O Shield
- 2 x Serial ATA (SATA) Data Cables (Optional)
- 3 x Screws for M.2 Sockets (Optional)

## 1.2 Specifications

| | |
|---|---|
| **Platform** | • Micro ATX Form Factor |
| **CPU** | • Supports 14th, 13th & 12th Gen Intel® Core™ Processors (LGA1700)<br>• Supports Intel® Hybrid Technology<br>• Supports Intel® Turbo Boost Max 3.0 Technology<br>• Supports Intel® Thermal Velocity Boost (TVB)<br>• Supports Intel® Adaptive Boost Technology (ABT) |
| **Chipset** | • Intel® B760 |
| **Memory** | • Dual Channel DDR5 Memory Technology<br>• 2 x DDR5 DIMM Slots<br>• Supports DDR5 non-ECC, un-buffered memory up to 7200+(OC)*<br>1DPC 1R Up to 7200+ MHz (OC), 5600 MHz Natively.<br>1DPC 2R Up to 6800+ MHz (OC), 5200 MHz Natively.<br>• Max. capacity of system memory: 96GB<br>• Supports Intel® Extreme Memory Profile (XMP) 3.0<br>* Please refer to Memory Support List on ASRock's website for more information. (http://www.asrock.com/) |
| **Expansion Slot** | CPU:<br>• 1 x PCIe 4.0 x16 Slot (PCIE1), supports x16 mode*<br>Chipset:<br>• 2 x PCIe 3.0 x1 Slots (PCIE2 and PCIE3)*<br>• 1 x M.2 Socket (Key E), supports type 2230 WiFi/BT PCIe WiFi module<br><br>* Supports NVMe SSD as boot disks |
| **Graphics** | • Intel® UHD Graphics Built-in Visuals and the VGA outputs can be supported only with processors which are GPU integrated.<br>• Intel® Xe Graphics Architecture (Gen 12)<br>• 1 x HDMI 2.1 TMDS Compatible, supports HDCP 2.3 and max. resolution up to 4K 60Hz |

English

| | |
|---|---|
| | • 1 x DisplayPort 1.4 with DSC (compressed), supports HDCP 2.3 and max. resolution up to 8K 60Hz / 5K 120Hz<br>• 1 x D-Sub, supports max. resolution up to Full HD (1920x1080) 60Hz |
| **Audio** | • 7.1 CH HD Audio (Realtek ALC897 Audio Codec) |
| **LAN** | • 2.5 Gigabit LAN 10/100/1000/2500 Mb/s<br>• Dragon RTL8125BG<br>• Supports Dragon 2.5G LAN Software<br>- Smart Auto Adjust Bandwidth Control<br>- Visual User Friendly UI<br>- Visual Network Usage Statistics<br>- Optimized Default Setting for Game, Browser, and Streaming Modes<br>- User Customized Priority Control |
| **USB** | • 1 x USB 3.2 Gen1 Type-C (Rear)<br>• 5 x USB 3.2 Gen1 Type-A (3 Rear, 2 Front)<br>• 6 x USB 2.0 (2 Rear, 4 Front)<br>* All USB ports support ESD Protection |
| **Rear Panel I/O** | • 2 x Antenna Mounting Points<br>• 1 x D-Sub Port<br>• 1 x HDMI Port<br>• 1 x DisplayPort 1.4<br>• 1 x USB 3.2 Gen1 Type-C Port<br>• 3 x USB 3.2 Gen1 Type-A Ports<br>• 2 x USB 2.0 Ports<br>• 1 x RJ-45 LAN Port<br>• HD Audio Jacks: Line in / Front Speaker / Microphone |
| **Storage** | Chipset:<br>• 1 x Hyper M.2 Socket (M2_1, Key M), supports type 2260/2280 PCIe Gen4x4 (64 Gb/s) mode*<br>• 1 x Ultra M.2 Socket (M2_2, Key M), supports type 2280 PCIe Gen3x4 (32 Gb/s) modes*<br>• 4 x SATA3 6.0 Gb/s Connectors |

| | |
|---|---|
| | * Supports Intel® Volume Management Device (VMD)<br>* Supports NVMe SSD as boot disks |
| **RAID** | • Supports RAID 0, RAID 1, RAID 5 and RAID 10 for SATA storage devices |
| **Connector** | • 1 x SPI TPM Header<br>• 1 x Chassis Intrusion and Speaker Header<br>• 1 x RGB LED Header*<br>• 3 x Addressable LED Headers**<br>• 1 x CPU Fan Connector (4-pin)***<br>• 1 x CPU/Water Pump Fan Connector (4-pin) (Smart Fan Speed Control)****<br>• 2 x Chassis/Water Pump Fan Connectors (4-pin) (Smart Fan Speed Control)*****<br>• 1 x 24 pin ATX Power Connector<br>• 1 x 8 pin 12V Power Connector<br>• 1 x Front Panel Audio Connector<br>• 2 x USB 2.0 Headers (Support 4 USB 2.0 ports)<br>• 1 x USB 3.2 Gen1 Header (Supports 2 USB 3.2 Gen1 ports)<br>* Supports in total up to 12V/3A, 36W LED Strip<br>** Support in total up to 5V/3A, 15W LED Strip<br>*** CPU_FAN1 supports the fan power up to 1A (12W).<br>**** CPU_FAN2/WP supports the fan power up to 2A (24W).<br>***** CHA_FAN1~2/WP support the fan power up to 2A (24W).<br>***** CPU_FAN2/WP and CHA_FAN1~2/WP can auto detect if 3-pin or 4-pin fan is in use. |
| **BIOS Feature** | • AMI UEFI Legal BIOS with GUI support |
| **OS** | • Microsoft® Windows® 10 64-bit / 11 64-bit |
| **Certifications** | • FCC, CE<br>• ErP/EuP ready (ErP/EuP ready power supply is required) |

** For detailed product information, please visit our website: http://www.asrock.com*

English

*Please realize that there is a certain risk involved with overclocking, including adjusting the setting in the BIOS, applying Untied Overclocking Technology, or using third-party overclocking tools. Overclocking may affect your system's stability, or even cause damage to the components and devices of your system. It should be done at your own risk and expense. We are not responsible for possible damage caused by overclocking.*

# 1.3 Motherboard Layout

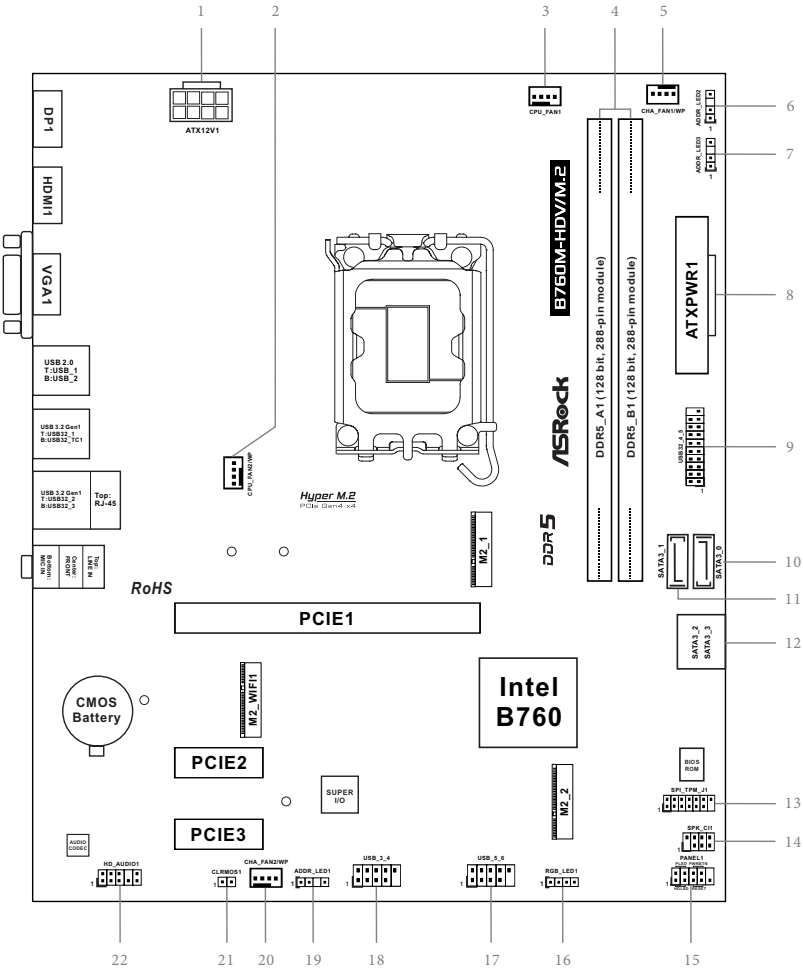

| No. | Description |
|---|---|
| 1 | ATX 12V Power Connector (ATX12V1) |
| 2 | CPU/Water Pump Fan Connector (CPU_FAN2/WP) |
| 3 | CPU Fan Connector (CPU_FAN1) |
| 4 | 2 x 288-pin DDR5 DIMM Slots (DDR5_A1, DDR5_B1) |
| 5 | Chassis/Water Pump Fan Connector (CHA_FAN1/WP) |
| 6 | Addressable LED Header (ADDR_LED2) |
| 7 | Addressable LED Header (ADDR_LED3) |
| 8 | ATX Power Connector (ATXPWR1) |
| 9 | USB 3.2 Gen1 Header (USB32_4_5) |
| 10 | SATA3 Connector (SATA3_0) |
| 11 | SATA3 Connector (SATA3_1) |
| 12 | SATA3 Connectors (SATA3_2)(Upper), (SATA3_3)(Lower) |
| 13 | SPI TPM Header (SPI_TPM_J1) |
| 14 | Chassis Intrusion and Speaker Header (SPK_CI1) |
| 15 | System Panel Header (PANEL1) |
| 16 | RGB LED Header (RGB_LED1) |
| 17 | USB 2.0 Header (USB_5_6) |
| 18 | USB 2.0 Header (USB_3_4) |
| 19 | Addressable LED Header (ADDR_LED1) |
| 20 | Chassis/Water Pump Fan Connector (CHA_FAN2/WP) |
| 21 | Clear CMOS Jumper (CLRMOS1) |
| 22 | Front Panel Audio Header (HD_AUDIO1) |

## 1.4 I/O Panel

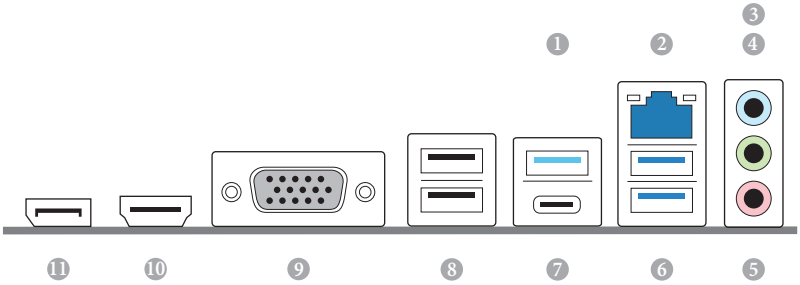


| No. | Description | No. | Description |
|---|---|---|---|
| 1 | USB 3.2 Gen1 Type-A Port (USB32_1) | 6 | USB 3.2 Gen1 Type-A Ports (USB32_23) |
| 2 | 2.5G LAN RJ-45 Port (Dragon RTL8125BG)* | 7 | USB 3.2 Gen1 Type-C Port (USB32_TC1) |
| | | 8 | USB 2.0 Ports (USB_12) |
| 3 | Line In (Light Blue)** | 9 | D-Sub Port |
| 4 | Front Speaker (Lime)** | 10 | HDMI Port |
| 5 | Microphone (Pink)** | 11 | DisplayPort 1.4 |

** There are two LEDs on each LAN port. Please refer to the table below for the LAN port LED indications.*

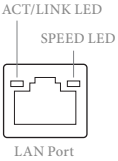


| Activity / Link LED | | Speed LED | |
|---|---|---|---|
| **Status** | **Description** | **Status** | **Description** |
| Off | No Link | Off | 10Mbps connection |
| Blinking | Data Activity | Orange | 100Mbps connection |
| On | Link | Green | 2.5Gbps connection |

*** Function of the Audio Ports in 7.1-channel Configuration:*

| Port | Function |
|---|---|
| Light Blue (Rear panel) | Rear Speaker Out |
| Lime (Rear panel) | Front Speaker Out |
| Pink (Rear panel) | Central /Subwoofer Speaker Out |
| Lime (Front panel) | Side Speaker Out |

English

## 1.5 Block Diagram

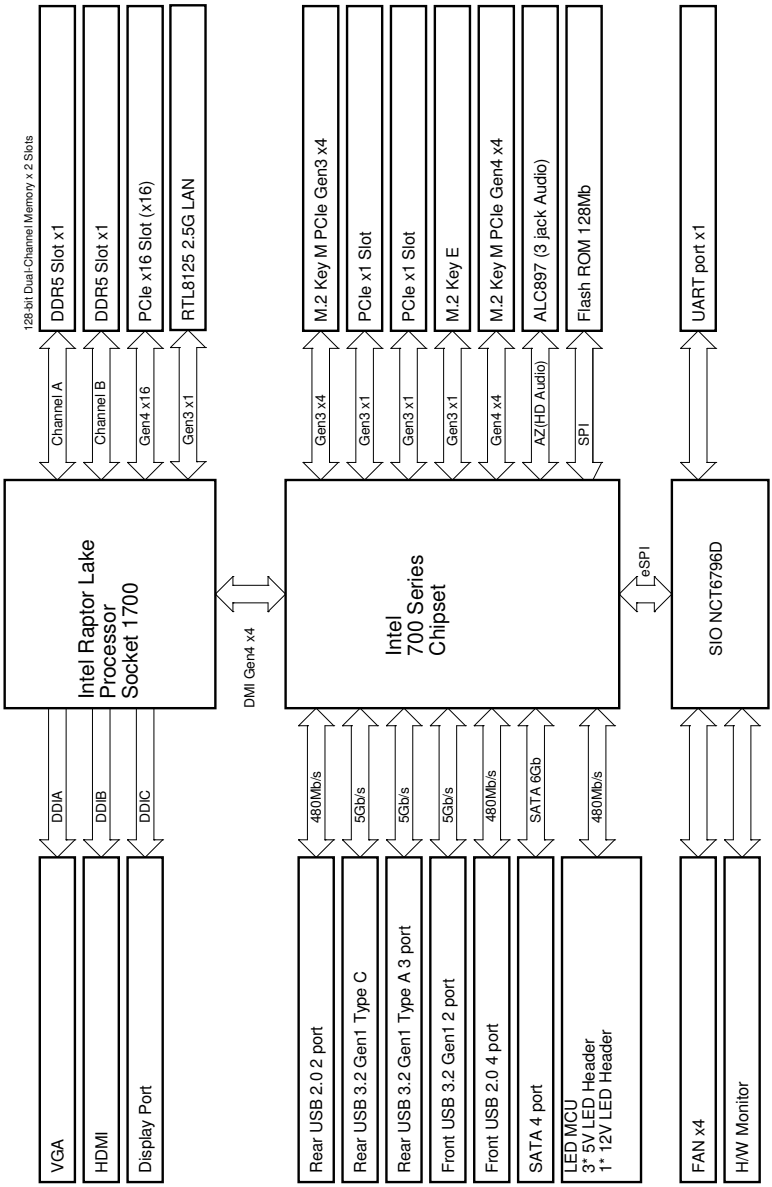


English

# Chapter 2 Installation

This is a Micro ATX form factor motherboard. Before you install the motherboard, study the configuration of your chassis to ensure that the motherboard fits into it.

## Pre-installation Precautions

Take note of the following precautions before you install motherboard components or change any motherboard settings.

- Make sure to unplug the power cord before installing or removing the motherboard components. Failure to do so may cause physical injuries and damages to motherboard components.
- In order to avoid damage from static electricity to the motherboard's components, NEVER place your motherboard directly on a carpet. Also remember to use a grounded wrist strap or touch a safety grounded object before you handle the components.
- Hold components by the edges and do not touch the ICs.
- Whenever you uninstall any components, place them on a grounded anti-static pad or in the bag that comes with the components.
- When placing screws to secure the motherboard to the chassis, please do not over-tighten the screws! Doing so may damage the motherboard.

## 2.1 Installing the CPU

1. *Before you insert the 1700-Pin CPU into the socket, please check if the **PnP cap** is on the socket, if the CPU surface is unclean, or if there are any **bent pins** in the socket. Do not force to insert the CPU into the socket if above situation is found. Otherwise, the CPU will be seriously damaged.*
2. *Unplug all power cables before installing the CPU.*

1

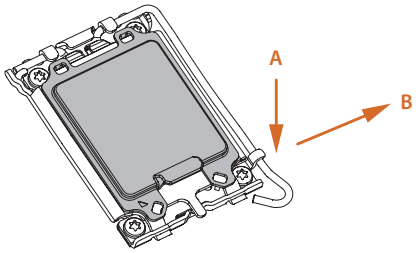


2

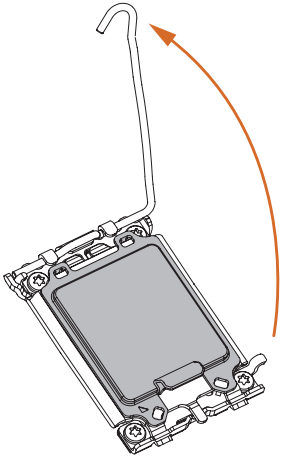

3

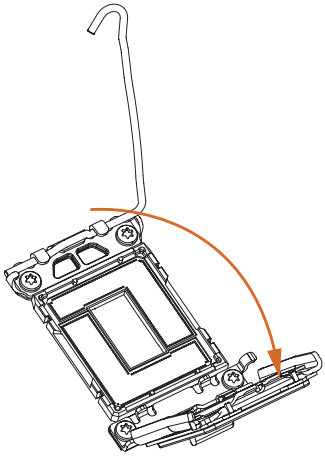

English

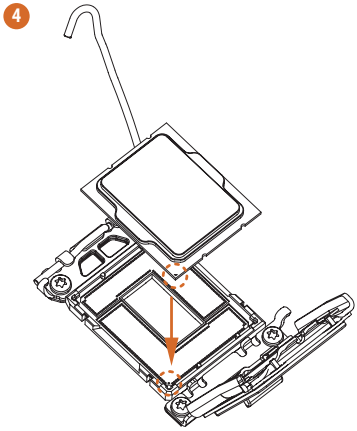


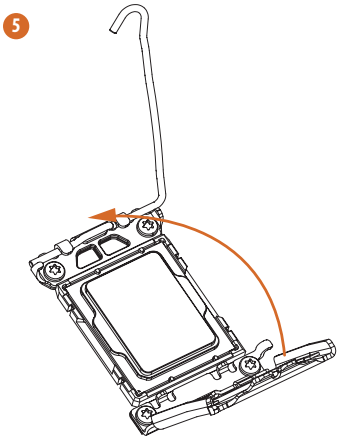


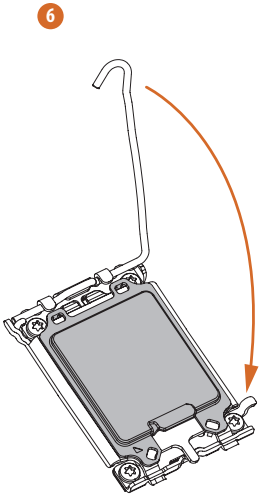


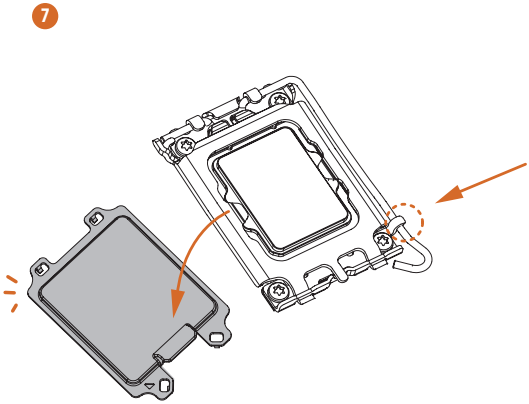


*Please save and replace the cover if the processor is removed. The cover must be placed if you wish to return the motherboard for after service.*

English

## 2.2 Installing the CPU Fan and Heatsink

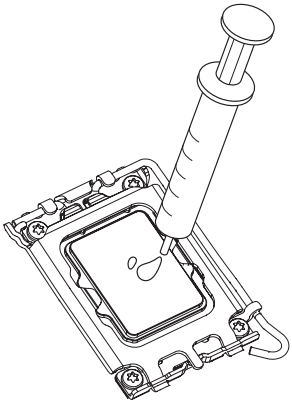

1

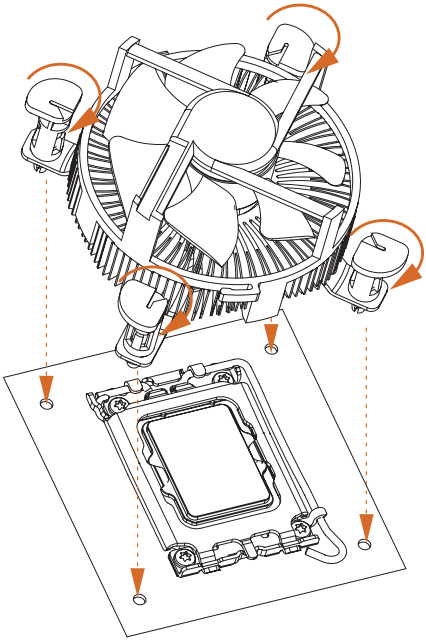

2

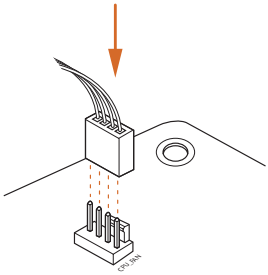

## 2.3 Installing Memory Modules (DIMM)

This motherboard provides two 288-pin DDR5 (Double Data Rate 5) DIMM slots, and supports Dual Channel Memory Technology.

1. *For dual channel configuration, you always need to install identical (the same brand, speed, size and chip-type) DDR5 DIMM pairs.*
2. *It is unable to activate Dual Channel Memory Technology with only one memory module installed.*
3. *It is not allowed to install a DDR, DDR2 , DDR3 or DDR4 memory module into a DDR5 slot; otherwise, this motherboard and DIMM may be damaged.*
4. *The DIMM only fits in one correct orientation. It will cause permanent damage to the motherboard and the DIMM if you force the DIMM into the slot at incorrect orientation.*

1

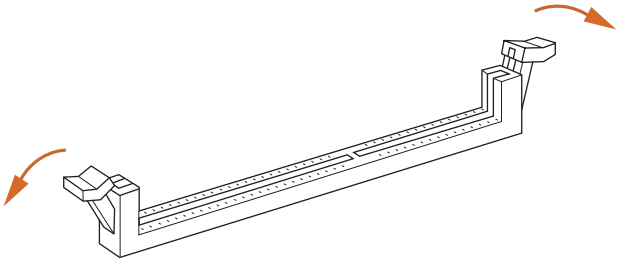

2

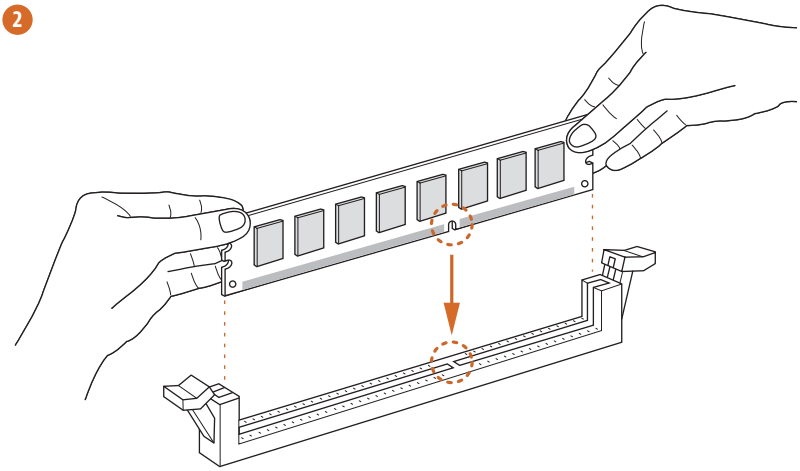

3

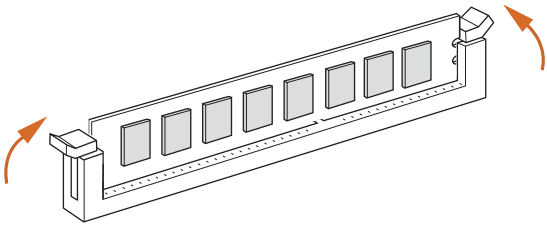

## 2.4 Connecting the Front Panel Header

1

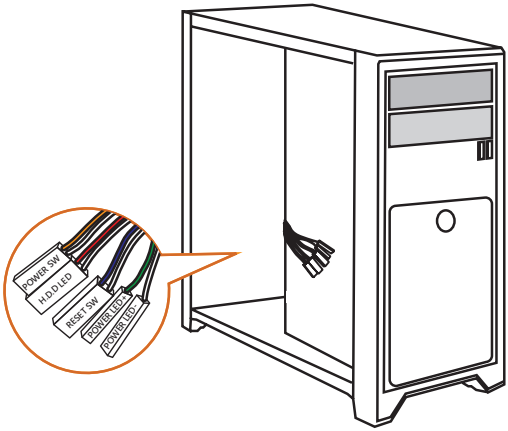


2

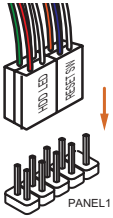


**System Panel Header**

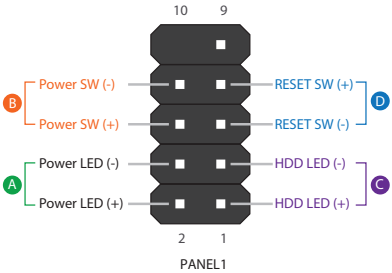


**Front Panel Wires**

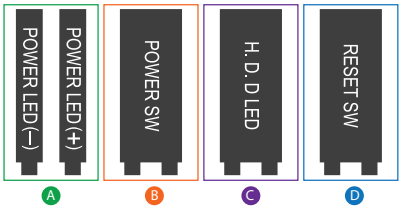


English

## 2.5 Installing the I/O Panel Shield

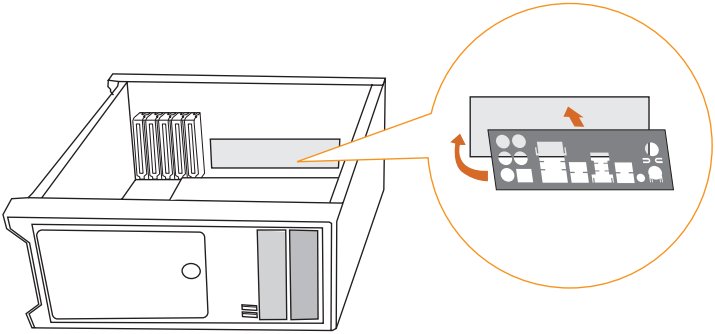

## 2.6 Installing the Motherboard

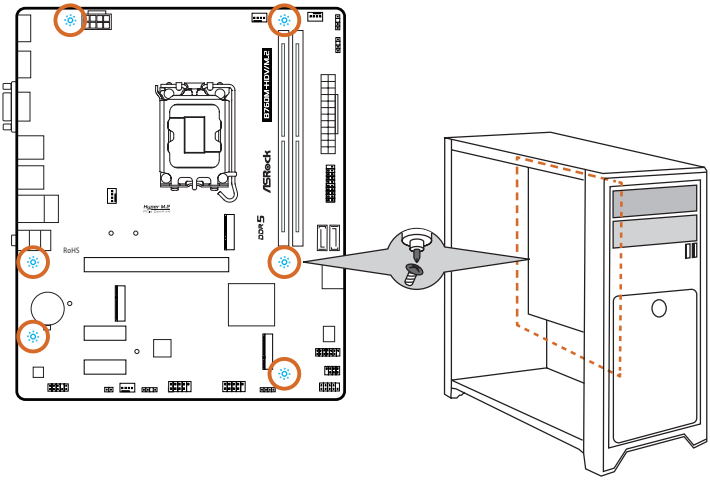

## 2.7 Installing SATA Drives

1

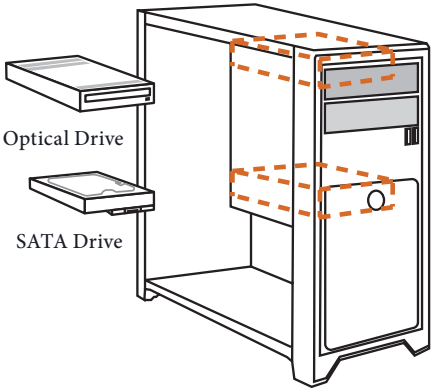


2

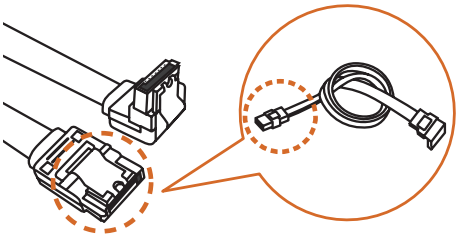

SATA Data Cable

3

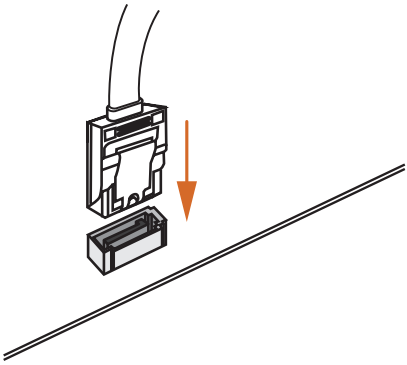

4

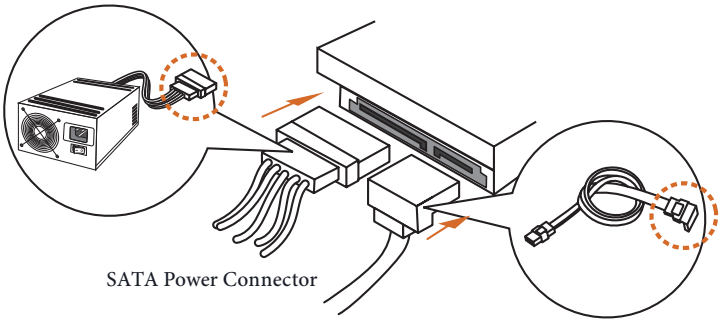

## 2.8 Installing a Graphics Card

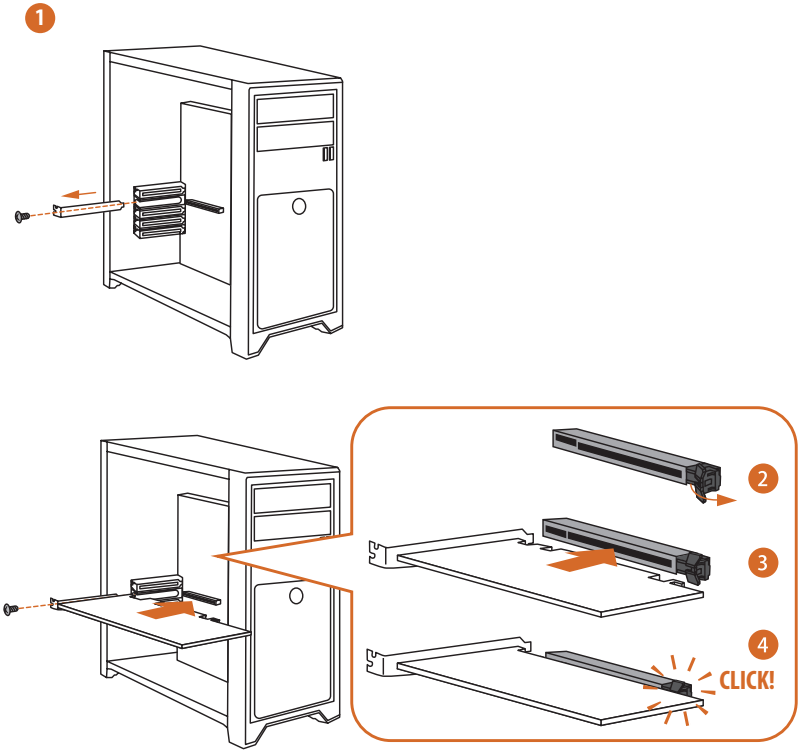

## Expansion Slots (PCIe Slots)

There are 3 PCI Express slots on the motherboard.

*Before installing an expansion card, please make sure that the power supply is switched off or the power cord is unplugged. Please read the documentation of the expansion card and make necessary hardware settings for the card before you start the installation.*

**PCIe slots:**

PCIE1 (PCIe 4.0 x16 slot) is used for PCIe x16 lane width graphics cards.
PCIE2 (PCIe 3.0 x1 slot) is used for PCIe x1 lane width cards.
PCIE3 (PCIe 3.0 x1 slot) is used for PCIe x1 lane width cards.

## 2.9 Connecting Peripheral Devices

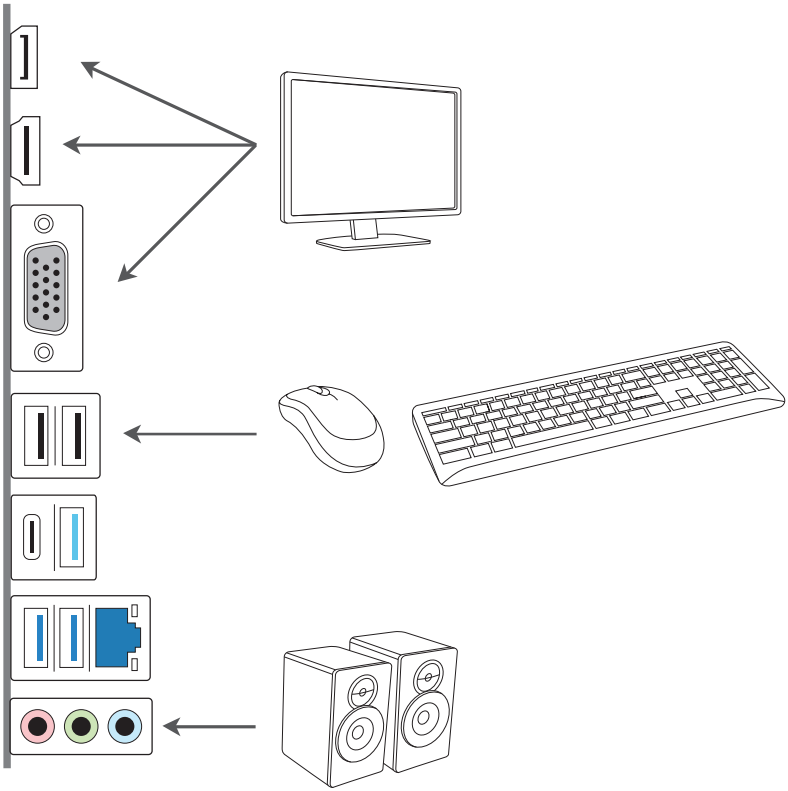

## 2.10 Connecting the Power Connectors

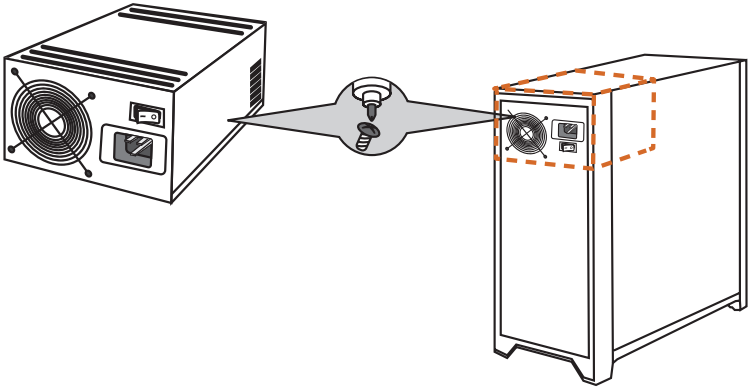

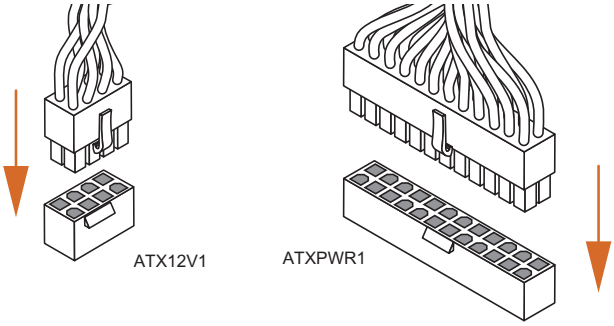


English

## 2.11 Power On

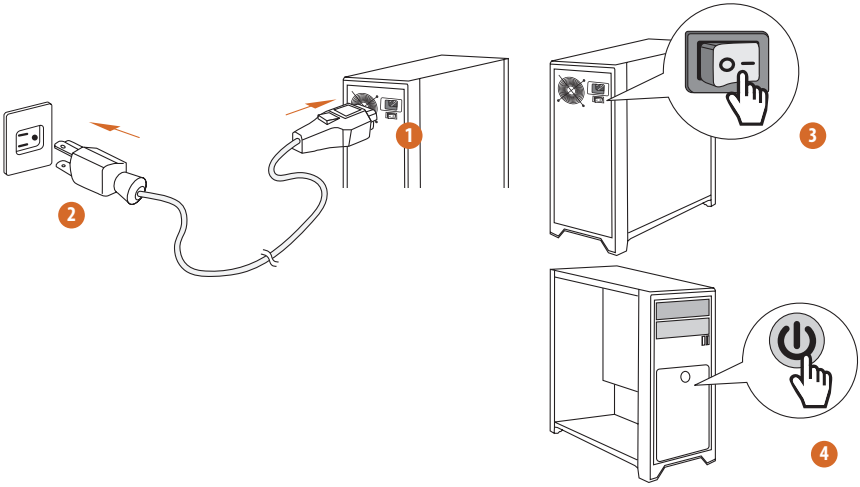

## 2.12 Jumpers Setup

The illustration shows how jumpers are setup. When the jumper cap is placed on the pins, the jumper is “Short”. If no jumper cap is placed on the pins, the jumper is “Open”.

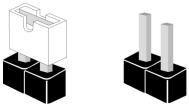


Clear CMOS Jumper
(CLRMOS1) (see p.6, No. 21)

CLRMOS1 allows you to clear the data in CMOS. The data in CMOS includes system setup information such as system password, date, time, and system setup parameters. To clear and reset the system parameters to default setup, please turn off the computer and unplug the power cord, then use a jumper cap to short the pins on CLRMOS1 for 3 seconds. Please remember to remove the jumper cap after clearing the CMOS. If you need to clear the CMOS when you just finish updating the BIOS, you must boot up the system first, and then shut it down before you do the clear-CMOS action.

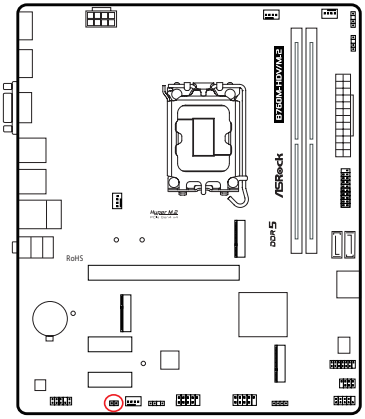


CLRMOS1

2-pin Jumper

Short: Clear CMOS
Open: Default

## 2.13 Onboard Headers and Connectors

*Onboard headers and connectors are NOT jumpers. Do NOT place jumper caps over these headers and connectors. Placing jumper caps over the headers and connectors will cause permanent damage to the motherboard.*

System Panel Header
(9-pin PANEL1) (see p.6, No. 15)

Connect the power button, reset button and system status indicator on the chassis to this header according to the pin assignments below. Note the positive and negative pins before connecting the cables.

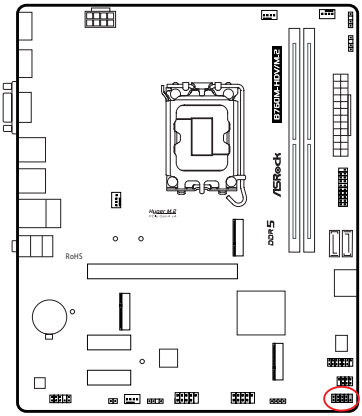


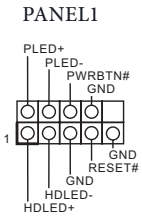


***PWRBTN (Power Button):***
*Connect to the power button on the chassis front panel. You may configure the way to turn off your system using the power button.*

***RESET (Reset Button):***
*Connect to the reset button on the chassis front panel. Press the reset button to restart the computer if the computer freezes and fails to perform a normal restart.*

***PLED (System Power LED):***
*Connect to the power status indicator on the chassis front panel. The LED is on when the system is operating. The LED keeps blinking when the system is in S1/S3 sleep state. The LED is off when the system is in S4 sleep state or powered off (S5).*

***HDLED (Hard Drive Activity LED):***
*Connect to the hard drive activity LED on the chassis front panel. The LED is on when the hard drive is reading or writing data.*

*The front panel design may differ by chassis. A front panel module mainly consists of power button, reset button, power LED, hard drive activity LED, speaker and etc. When connecting your chassis front panel module to this header, make sure the wire assignments and the pin assignments are matched correctly.*

English

Chassis Intrusion and Speaker Header
(7-pin SPK_CI1) (see p.6, No. 14)

Please connect the chassis intrusion and the chassis speaker to this header.

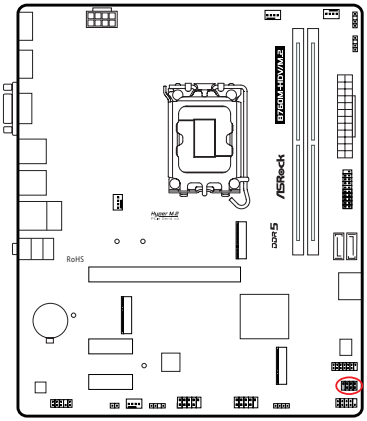


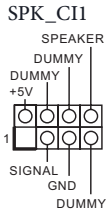


Serial ATA3 Connectors
Vertical:
(SATA3_0) (see p.6, No. 10)
(SATA3_1) (see p.6, No. 11)
Right Angle:
(SATA3_2) (see p.6, No. 12) (Upper)
(SATA3_3) (see p.6, No. 12) (Lower)

These four SATA3 connectors support SATA data cables for internal storage devices with up to 6.0 Gb/s data transfer rate.

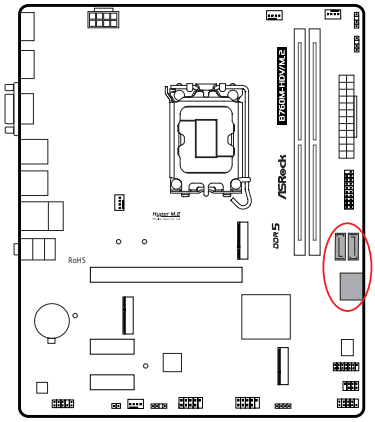


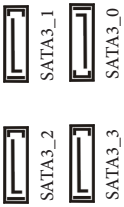


English

USB 2.0 Headers
(9-pin USB_3_4) (see p.6, No. 18)
(9-pin USB_5_6) (see p.6, No. 17)

There are two headers on this motherboard. Each USB 2.0 header can support two ports.

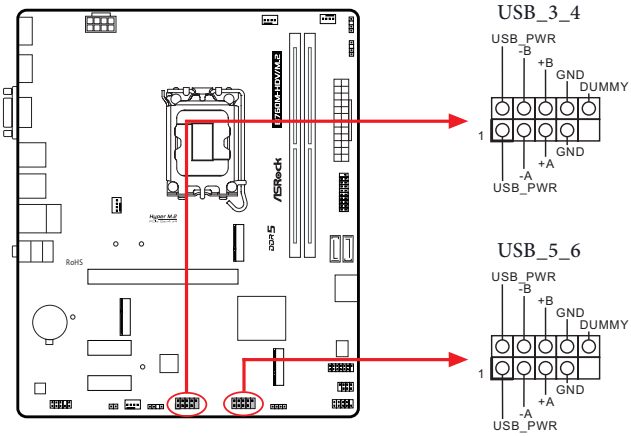


USB 3.2 Gen1 Header
(19-pin USB32_4_5) (see p.6, No. 9)

There is one header on this motherboard. This USB 3.2 Gen1 header can support two ports.

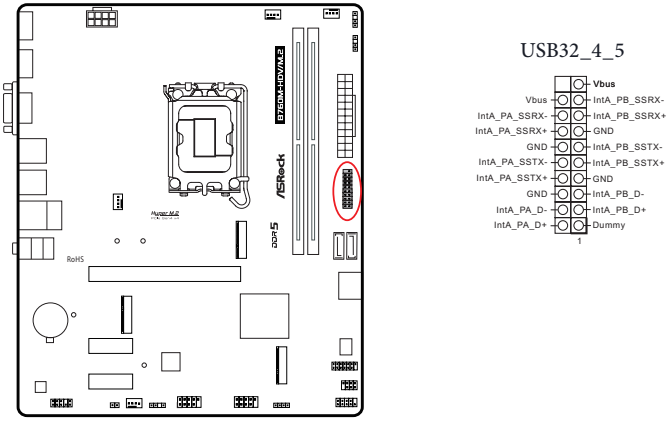


English

Front Panel Audio Header
(9-pin HD_AUDIO1) (see p.6, No. 22)

This header is for connecting audio devices to the front audio panel.

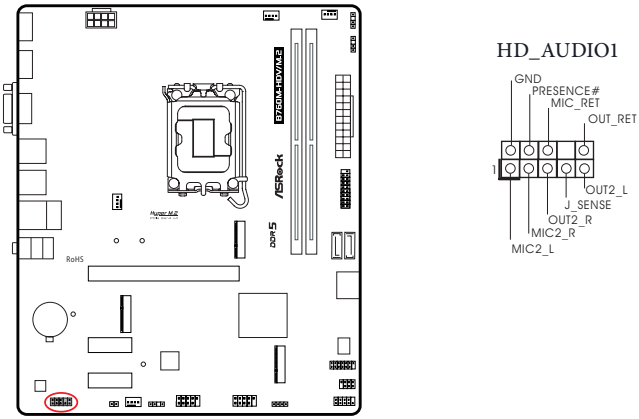


*High Definition Audio supports Jack Sensing, but the panel wire on the chassis must support HDA to function correctly. Please follow the instructions in our manual and chassis manual to install your system.*

Chassis/Water Pump Fan Connectors
(4-pin CHA_FAN1/WP) (see p.6, No. 5)
(4-pin CHA_FAN2/WP) (see p.6, No. 20)
This motherboard provides two 4-Pin water cooling chassis fan connectors. If you plan to connect a 3-Pin chassis water cooler fan, please connect it to Pin 1-3.

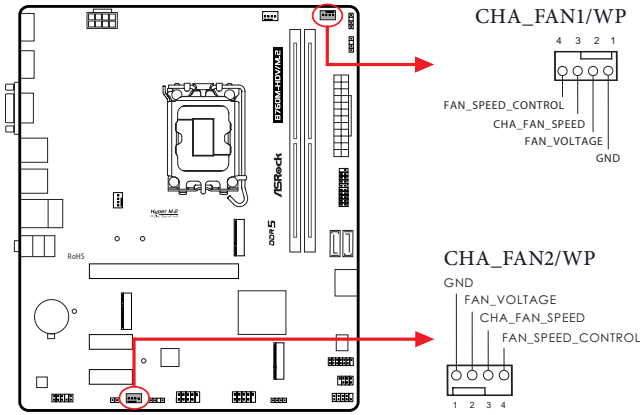

CPU Fan Connector
(4-pin CPU_FAN1) (see p.6, No. 3)

This motherboard provides a 4-Pin CPU fan (Quiet Fan) connector. If you plan to connect a 3-Pin CPU fan, please connect it to Pin 1-3.

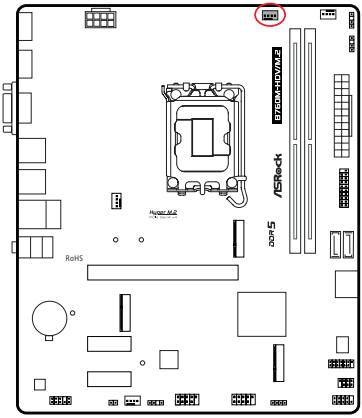


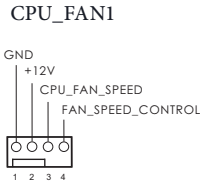


CPU/Water Pump Fan Connector
(4-pin CPU_FAN2/WP) (see p.6, No. 2)

This motherboard provides a 4-Pin water cooling CPU fan connector. If you plan to connect a 3-Pin CPU water cooler fan, please connect it to Pin 1-3.

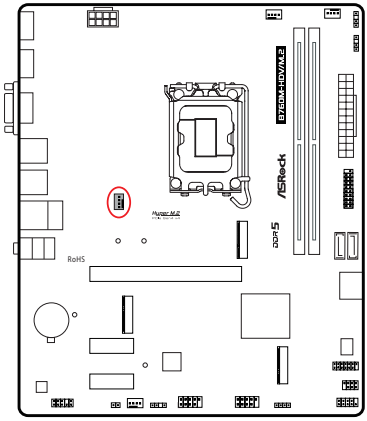


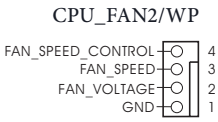


English

ATX Power Connector
(24-pin ATXPWR1) (see p.6, No. 8)

This motherboard provides a 24-pin ATX power connector. To use a 20-pin ATX power supply, please plug it along Pin 1 and Pin 13.

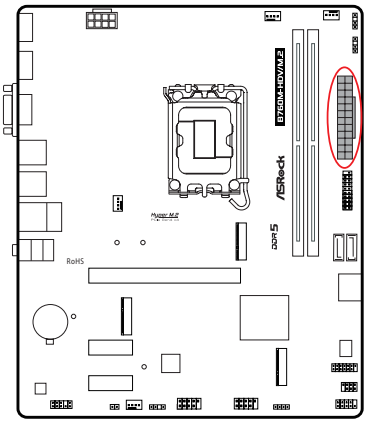


ATXPWR1

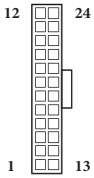


ATX 12V Power Connector
(8-pin ATX12V1) (see p.6, No. 1)

This motherboard provides a 8-pin ATX 12V power connector. To use a 4-pin ATX power supply, please plug it along Pin 1 and Pin 5.

***Warning: Please make sure that the power cable connected is for the CPU and not the graphics card. Do not plug the PCIe power cable to this connector.**

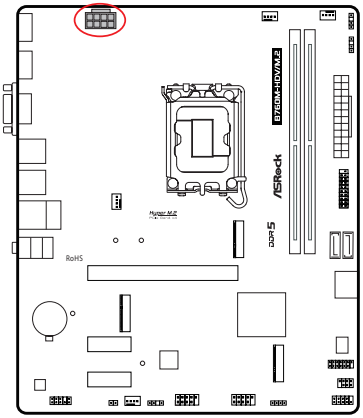


ATX12V1

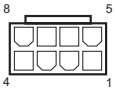


English

SPI TPM Header
(13-pin SPI_TPM_J1) (see p.6, No. 13)

This connector supports SPI Trusted Platform Module (TPM) system, which can securely store keys, digital certificates, passwords, and data. A TPM system also helps enhance network security, protects digital identities, and ensures platform integrity.

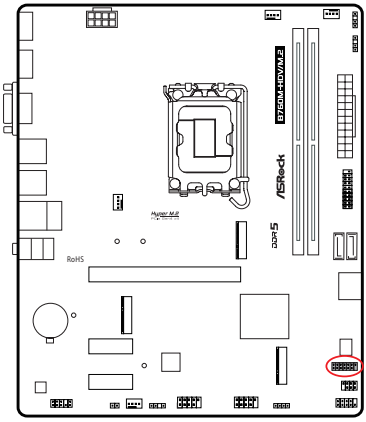


SPI_TPM_J1

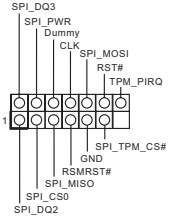


English

RGB LED Header

(4-pin RGB_LED1) (see p.6, No. 16)

This RGB header is used to connect RGB LED extension cable which allow users to choose from various LED lighting effects.

**Caution: Never install the RGB LED cable in the wrong orientation; otherwise, the cable may be damaged.**

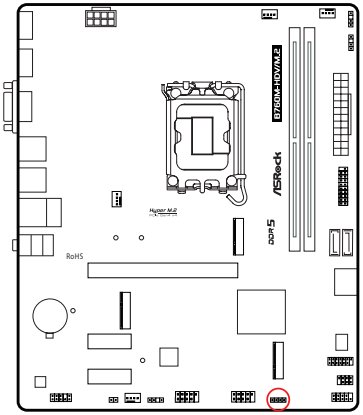

Connect your RGB LED strip to the **RGB LED Header (RGB_LED1)** on the motherboard.

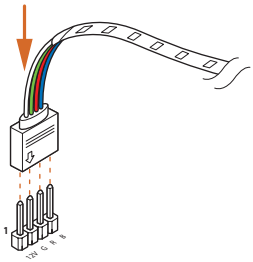


1. *Never install the RGB LED cable in the wrong orientation; otherwise, the cable may be damaged.*
2. *Before installing or removing your RGB LED cable, please power off your system and unplug the power cord from the power supply. Failure to do so may cause damages to motherboard components.*

1. *Please note that the RGB LED strips do not come with the package.*
2. *The RGB LED header supports standard 5050 RGB LED strip (12V/G/R/B), with a maximum power rating of 3A (12V) and length within 2 meters.*

English

Addressable LED Headers
(3-pin ADDR_LED1) (see p.6, No. 19)
(3-pin ADDR_LED2) (see p.6, No. 6)
(3-pin ADDR_LED3) (see p.6, No. 7)
These headers are used to connect Addressable LED extension cables which allow users to choose from various LED lighting effects.
**Caution: Never install the Addressable LED cable in the wrong orientation; otherwise, the cable may be damaged.**

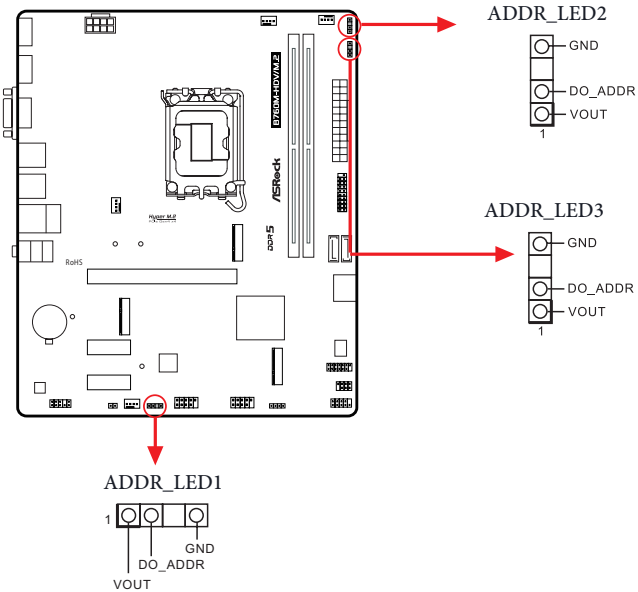


Connect your Addressable RGB LED strips to the **Addressable LED Headers (ADDR_LED1 / ADDR_LED2 / ADDR_LED3)** on the motherboard.

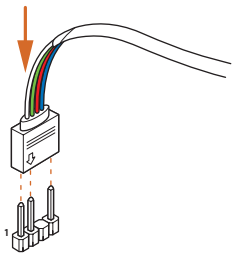


English

1. *Never install the RGB LED cable in the wrong orientation; otherwise, the cable may be damaged.*
2. *Before installing or removing your RGB LED cable, please power off your system and unplug the power cord from the power supply. Failure to do so may cause damages to motherboard components.*

1. *Please note that the RGB LED strips do not come with the package.*
2. *The RGB LED header supports WS2812B addressable RGB LED strip (5V/Data/GND), with a maximum power rating of 3A (5V) and length within 2 meters.*

## 2.14 M.2 WiFi/BT PCIe WiFi Module Installation Guide

The M.2 is a small size and versatile card edge connector that aims to replace mPCIe and mSATA. The M.2 Socket (Key E) supports type 2230 WiFi/BT PCIe WiFi module.
* The M.2 socket does not support SATA M.2 SSDs.

### Installing the WiFi/BT module

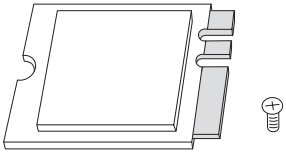

***Step 1***

Prepare a type 2230 WiFi/BT PCIe WiFi module and the screw.

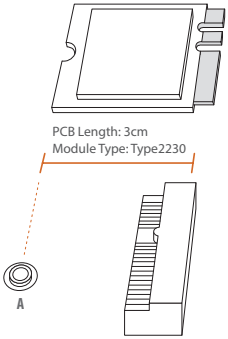


***Step 2***

Find the nut location to be used.

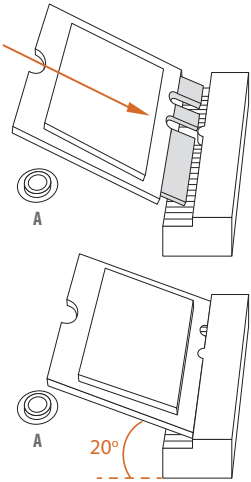


***Step 3***

Gently insert the WiFi/BT PCIe WiFi module into the M.2 slot. Please be aware that the module only fits in one orientation.

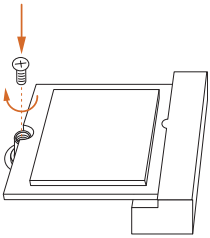

***Step 4***

Tighten the screw with a screwdriver to secure the module into place. Please do not overtighten the screw as this might damage the module.

## 2.15 M.2 SSD Module Installation Guide (M2_1)

The M.2 is a small size and versatile card edge connector that aims to replace mPCIe and mSATA. The Hyper M.2 Socket (M2_1, Key M) supports type 2260/2280 PCIe Gen4x4 (64 Gb/s) mode.

### Installing the M.2 SSD Module

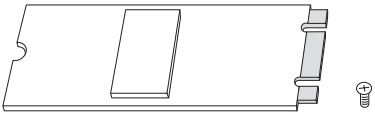

***Step 1***

Prepare a M.2 SSD module and the screw.

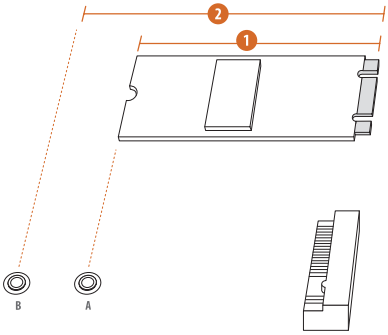


***Step 2***

Depending on the PCB type and length of your M.2 SSD module, find the corresponding nut location to be used.

| No. | 1 | 2 |
|---|---|---|
| Nut Location | A | B |
| PCB Length | 6cm | 8cm |
| Module Type | Type 2260 | Type 2280 |

### *Step 3*

Move the standoff based on the module type and length.
The standoff is placed at the nut location B by default. Skip Step 3 and 4 and go straight to Step 5 if you are going to use the default nut. Otherwise, release the standoff by hand.

### *Step 4*

Peel off the yellow protective film on the nut to be used. Hand tighten the standoff into the desired nut location on the motherboard.

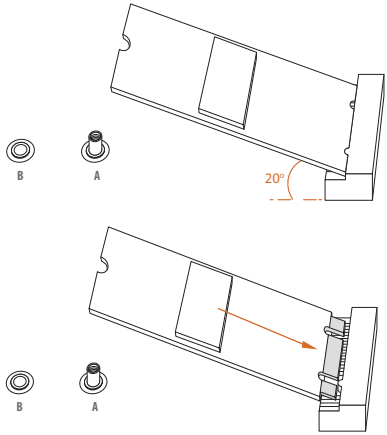


### *Step 5*

Align and gently insert the M.2 SSD module into the M.2 slot. Please be aware that the M.2 SSD module only fits in one orientation.

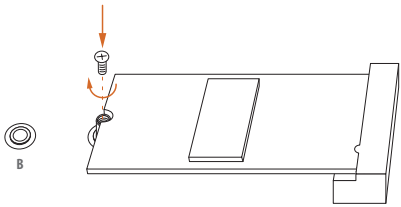


### *Step 6*

Tighten the screw with a screwdriver to secure the module into place. Please do not overtighten the screw as this might damage the module.

For the latest updates of M.2 SSD module support list, please visit our website for details: http://www.asrock.com

## 2.16 M.2 SSD Module Installation Guide (M2_2)

The M.2 is a small size and versatile card edge connector that aims to replace mPCIe and mSATA. The Ultra M.2 Socket (M2_2, Key M) supports type 2280 PCIe Gen3x4 (32 Gb/s) modes.

### Installing the M.2 SSD Module

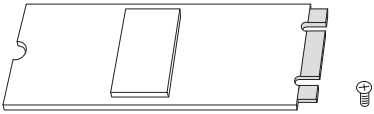

***Step 1***

Prepare a M.2 SSD module and the screw.

***Step 2***

Depending on the PCB type and length of your M.2 SSD module, find the corresponding nut location to be used.

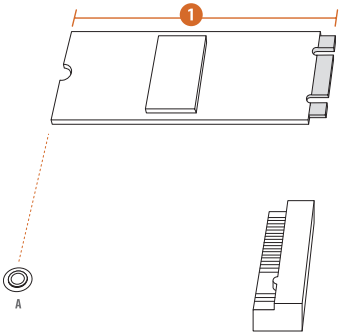


| No. | 1 |
|---|---|
| Nut Location | A |
| PCB Length | 8cm |
| Module Type | Type 2280 |

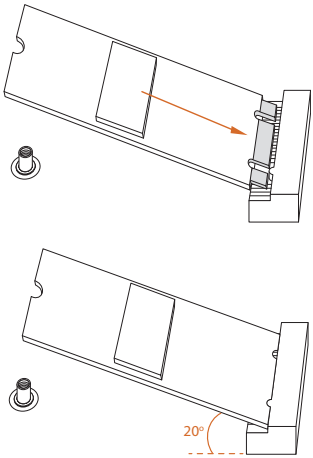


***Step 3***

Align and gently insert the M.2 SSD module into the M.2 slot. Please be aware that the M.2 SSD module only fits in one orientation.

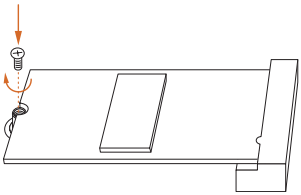

***Step 4***

Tighten the screw with a screwdriver to secure the module into place. Please do not overtighten the screw as this might damage the module.

For the latest updates of M.2 SSD module support list, please visit our website for details: http://www.asrock.com

Version 1.0
Published July 2023

Copyright©2023 ASRock INC. All rights reserved.

## Copyright Notice:

No part of this documentation may be reproduced, transcribed, transmitted, or translated in any language, in any form or by any means, except duplication of documentation by the purchaser for backup purpose, without written consent of ASRock Inc.

Products and corporate names appearing in this documentation may or may not be registered trademarks or copyrights of their respective companies, and are used only for identification or explanation and to the owners' benefit, without intent to infringe.

## Disclaimer:

Specifications and information contained in this documentation are furnished for informational use only and subject to change without notice, and should not be constructed as a commitment by ASRock. ASRock assumes no responsibility for any errors or omissions that may appear in this documentation.

With respect to the contents of this documentation, ASRock does not provide warranty of any kind, either expressed or implied, including but not limited to the implied warranties or conditions of merchantability or fitness for a particular purpose.

In no event shall ASRock, its directors, officers, employees, or agents be liable for any indirect, special, incidental, or consequential damages (including damages for loss of profits, loss of business, loss of data, interruption of business and the like), even if ASRock has been advised of the possibility of such damages arising from any defect or error in the documentation or product.

This device complies with Part 15 of the FCC Rules. Operation is subject to the following two conditions:

(1) this device may not cause harmful interference, and
(2) this device must accept any interference received, including interference that may cause undesired operation.

The terms HDMI® and HDMI High-Definition Multimedia Interface, and the HDMI logo are trademarks or registered trademarks of HDMI Licensing LLC in the United States and other countries.

HIGH-DEFINITION MULTIMEDIA INTERFACE

INTEL END USER SOFTWARE LICENSE AGREEMENT
IMPORTANT - READ BEFORE COPYING, INSTALLING OR USING.

LICENSE. Licensee has a license under Intel's copyrights to reproduce Intel's Software only in its unmodified and binary form, (with the accompanying documentation, the "Software") for Licensee's personal use only, and not commercial use, in connection with Intel-based products for which the Software has been provided, subject to the following conditions:

(a) Licensee may not disclose, distribute or transfer any part of the Software, and You agree to prevent unauthorized copying of the Software.

(b) Licensee may not reverse engineer, decompile, or disassemble the Software.

(c) Licensee may not sublicense the Software.

(d) The Software may contain the software and other intellectual property of third party suppliers, some of which may be identified in, and licensed in accordance with, an enclosed license.txt file or other text or file.

(e) Intel has no obligation to provide any support, technical assistance or updates for the Software.

OWNERSHIP OF SOFTWARE AND COPYRIGHTS. Title to all copies of the Software remains with Intel or its licensors or suppliers. The Software is copyrighted and protected by the laws of the United States and other countries, and international treaty provisions. Licensee may not remove any copyright notices from the Software. Except as otherwise expressly provided above, Intel grants no express or implied right under Intel patents, copyrights, trademarks, or other intellectual property rights. Transfer of the license terminates Licensee's right to use the Software.

DISCLAIMER OF WARRANTY. The Software is provided "AS IS" without warranty of any kind, EITHER EXPRESS OR IMPLIED, INCLUDING WITHOUT LIMITATION, WARRANTIES OF MERCHANTABILITY OR FITNESS FOR ANY PARTICULAR PURPOSE.

LIMITATION OF LIABILITY. NEITHER INTEL NOR ITS LICENSORS OR SUPPLIERS WILL BE LIABLE FOR ANY LOSS OF PROFITS, LOSS OF USE, INTERRUPTION OF BUSINESS, OR INDIRECT, SPECIAL, INCIDENTAL, OR CONSEQUENTIAL DAMAGES OF ANY KIND WHETHER UNDER THIS AGREEMENT OR OTHERWISE, EVEN IF INTEL HAS BEEN ADVISED OF THE POSSIBILITY OF SUCH DAMAGES.

LICENSE TO USE COMMENTS AND SUGGESTIONS. This Agreement does NOT obligate Licensee to provide Intel with comments or suggestions regarding the Software. However, if Licensee provides Intel with comments or suggestions for the modification, correction, improvement or enhancement of (a) the Software or (b) Intel products or processes that work with the Software, Licensee grants to Intel a non-exclusive, worldwide, perpetual, irrevocable, transferable, royalty-free license, with the right to sublicense, under Licensee's intellectual property rights, to incorporate or otherwise utilize those comments and suggestions.

TERMINATION OF THIS LICENSE. Intel or the sublicensor may terminate this license at any time if Licensee is in breach of any of its terms or conditions. Upon termination, Licensee will immediately destroy or return to Intel all copies of the Software.

THIRD PARTY BENEFICIARY. Intel is an intended beneficiary of the End User License Agreement and has the right to enforce all of its terms.

U.S. GOVERNMENT RESTRICTED RIGHTS. The Software is a commercial item (as defined in 48 C.F.R. 2.101) consisting of commercial computer software and commercial computer software documentation (as those terms are used in 48 C.F.R. 12.212), consistent with 48 C.F.R. 12.212 and 48 C.F.R 227.7202-1 through 227.7202-4. You will not provide the Software to the U.S. Government. Contractor or Manufacturer is Intel Corporation, 2200 Mission College Blvd., Santa Clara, CA 95054.

EXPORT LAWS. Licensee agrees that neither Licensee nor Licensee's subsidiaries will export/re-export the Software, directly or indirectly, to any country for which the U.S. Department of Commerce or any other agency or department of the U.S. Government or the foreign government from where it is shipping requires an export license, or other governmental approval, without first obtaining any such required license or approval. In the event the Software is exported from the U.S.A. or re-exported from a foreign destination by Licensee, Licensee will ensure that the distribution and export/re-export or import of the Software complies with all laws, regulations, orders, or other restrictions of the U.S. Export Administration Regulations and the appropriate foreign government.

APPLICABLE LAWS. This Agreement and any dispute arising out of or relating to it will be governed by the laws of the U.S.A. and Delaware, without regard to conflict of laws principles. The Parties to this Agreement exclude the application of the United Nations Convention on Contracts for the International Sale of Goods (1980). The state and federal courts sitting in Delaware, U.S.A. will have exclusive jurisdiction over any dispute arising out of or relating to this Agreement. The Parties consent to personal jurisdiction and venue in those courts. A Party that obtains a judgment against the other Party in the courts identified in this section may enforce that judgment in any court that has jurisdiction over the Parties.

Licensee's specific rights may vary from country to country.

## WARNING

THIS PRODUCT CONTAINS A BUTTOON BATTERY
If swallowed, a button battery can cause serious injury or death.
Please keep batteries out of sight or reach of children.

## CALIFORNIA, USA ONLY

The Lithium battery adopted on this motherboard contains Perchlorate, a toxic substance controlled in Perchlorate Best Management Practices (BMP) regulations passed by the California Legislature. When you discard the Lithium battery in California, USA, please follow the related regulations in advance.

"Perchlorate Material-special handling may apply, see www.dtsc.ca.gov/hazardouswaste/perchlorate"

## AUSTRALIA ONLY

Our goods come with guarantees that cannot be excluded under the Australian Consumer Law. You are entitled to a replacement or refund for a major failure and compensation for any other reasonably foreseeable loss or damage caused by our goods. You are also entitled to have the goods repaired or replaced if the goods fail to be of acceptable quality and the failure does not amount to a major failure. If you require assistance please call ASRock Tel : +886-2-28965588 ext.123 (Standard International call charges apply)

UK
CA

ASRock INC. hereby declares that this device is in compliance with the essential requirements and other relevant provisions of related UKCA Directives. Full text of UKCA declaration of conformity is available at: http://www.asrock.com

CE

ASRock INC. hereby declares that this device is in compliance with the essential requirements and other relevant provisions of related Directives. Full text of EU declaration of conformity is available at: http://www.asrock.com

ASRock follows the green design concept to design and manufacture our products, and makes sure that each stage of the product life cycle of ASRock product is in line with global
environmental regulations. In addition, ASRock disclose the relevant information based on regulation requirements.

Please refer to https://www.asrock.com/general/about.asp?cat=Responsibility for information disclosure based on regulation requirements ASRock is complied with.

DO NOT throw the motherboard in municipal waste. This product has been designed to enable proper reuse of parts and recycling. This symbol of the crossed out wheeled bin indicates that the product (electrical and electronic equipment) should not be placed in municipal waste. Check local regulations for disposal of electronic products.