MAG Series

Motherboard

MAG Z790 TOMAHAWK MAX WIFI

User Guide

Contents

Quick Start 4

Specifications 16

Special Features 20

Package Contents 21

Back Panel Connectors 22

- LAN Port LED Status Table 23
- Audio Jacks Connection 23
- Installing Antennas 25

Overview of Components 26

- CPU Socket 27
- DIMM Slots 28
- PCI_E1~3: PCIe Expansion Slots 29
- M2_1~4: M.2 Slots (Key M) 30
- SATA_1~2, SATA_5~8 & SATA_A1~A2: SATA 6Gb/s Connectors 39
- JAUD1: Front Audio Connector 40
- JFP1, JFP2: Front Panel Connectors 40
- JDASH1 : Tuning Controller Connector 41
- JCI1: Chassis Intrusion Connector 41
- CPU_PWR1~2, ATX_PWR1: Power Connectors 42
- JUSB4: USB 3.2 Gen 2 Type-C Front Panel Connector 43
- JUSB3: USB 3.2 Gen 1 Connector 43
- JUSB1~2: USB 2.0 Connectors 44
- JTPM1: TPM Module Connector 44
- JOC_FS1: Safe Boot Jumper 45
- JTBT_U4_1: USB4 Expansion Card Connector 45
- CPU_FAN1, PUMP_FAN1, SYS_FAN1~6: Fan Connectors 46
- JBAT1: Clear CMOS (Reset BIOS) Jumper 47
- BAT1: CMOS Battery 48
- JRGB1: RGB LED Connector 49
- JARGB_V2_1~3: A-RAINBOW V2 (ARGB Gen2) LED Connectors 50

Onboard LEDs 52
EZ Debug LED 52
Installing OS, Drivers & MSI Center 53
MSI Center 56
UEFI BIOS 57
BIOS Setup 58
Resetting BIOS 59
Updating BIOS 59
Block Diagram i
Regulatory Notices ii

Quick Start

Thank you for purchasing a new motherboard from MSI®. This Quick Start section provides demonstration diagrams about how to install your computer. Some of the installations also provide video demonstrations. Please link to the URL to watch it with the web browser on your phone or tablet. You may have even link to the URL by scanning the QR code.

Preparing Tools and Components

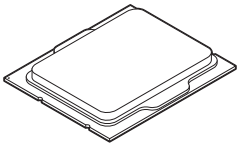

Intel® LGA1700 CPU

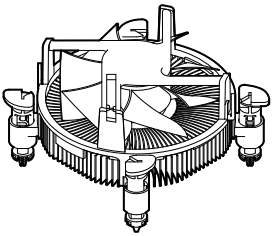

LGA1700 CPU Fan

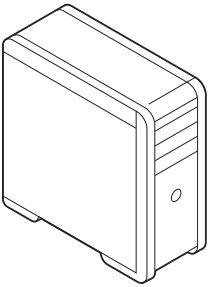

Chassis

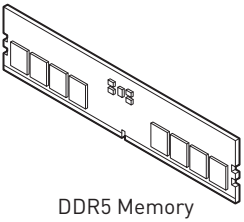

DDR5 Memory

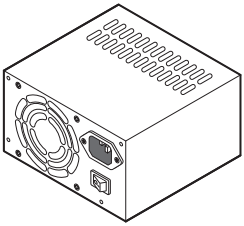

Power Supply Unit

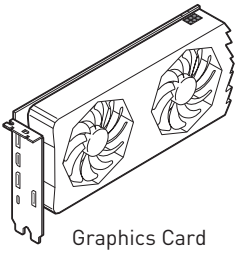

Graphics Card

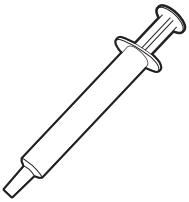

Thermal Paste

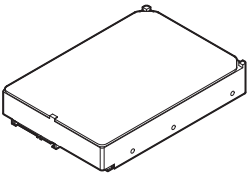

SATA Hard Disk Drive

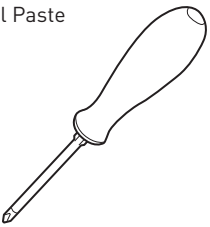

Phillips Screwdriver

A Package of Screws

Safety Information

- The components included in this package are prone to damage from electrostatic discharge (ESD). Please adhere to the following instructions to ensure successful computer assembly.
- Ensure that all components are securely connected. Loose connections may cause the computer to not recognize a component or fail to start.
- Hold the motherboard by the edges to avoid touching sensitive components.
- It is recommended to wear an electrostatic discharge (ESD) wrist strap when handling the motherboard to prevent electrostatic damage. If an ESD wrist strap is not available, discharge yourself of static electricity by touching another metal object before handling the motherboard.
- Store the motherboard in an electrostatic shielding container or on an anti-static pad whenever the motherboard is not installed.
- Before turning on the computer, ensure that there are no loose screws or metal components on the motherboard or anywhere within the computer case.
- Do not boot the computer before installation is completed. This could cause permanent damage to the components as well as injury to the user.
- If you need help during any installation step, please consult a certified computer technician.
- Always turn off the power supply and unplug the power cord from the power outlet before installing or removing any computer component.
- Keep this user guide for future reference.
- Keep this motherboard away from humidity.
- Make sure that your electrical outlet provides the same voltage as is indicated on the PSU, before connecting the PSU to the electrical outlet.
- Place the power cord such a way that people can not step on it. Do not place anything over the power cord.
- All cautions and warnings on the motherboard should be noted.
- If any of the following situations arises, get the motherboard checked by service personnel:
  - Liquid has penetrated into the computer.
  - The motherboard has been exposed to moisture.
  - The motherboard does not work well or you can not get it work according to user guide.
  - The motherboard has been dropped and damaged.
  - The motherboard has obvious sign of breakage.
- Do not leave this motherboard in an environment above 60°C (140°F), it may damage the motherboard.

Case stand-off notification

To prevent damage to the motherboard, any unnecessary mounting stand-off between the motherboard circuits and the computer case is prohibited. The Case standoff keep out zone signs will be marked on the backside of motherboard (as shown below) to serve as a warning to user.

Avoid collision notification

Protective paint is printed around each screw hole to prevent parts from being scratched.

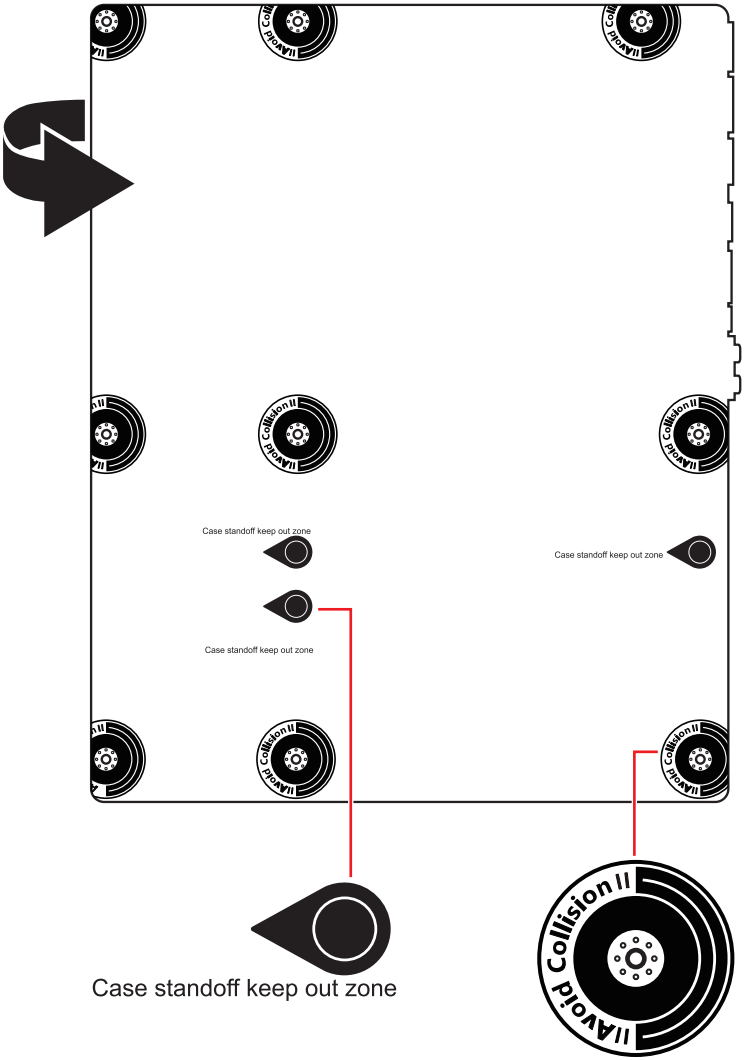

Installing a Processor

- https://youtu.be/KMf9oIDsGes

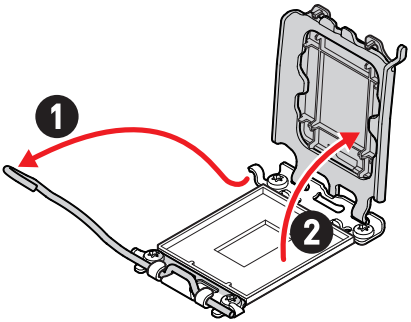

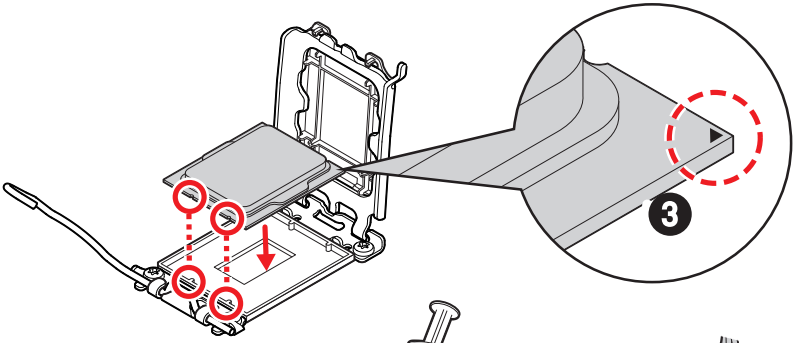

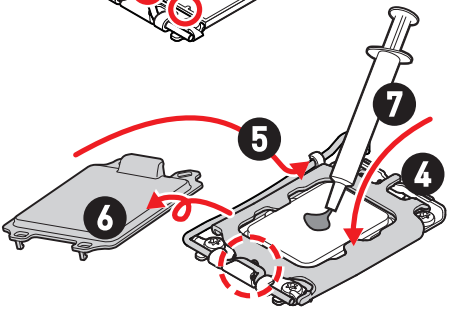

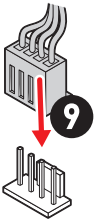

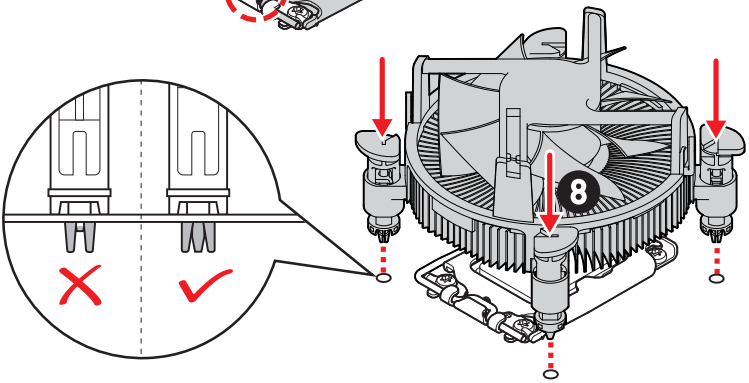

Installing DDR5 memory

- https://youtu.be/XiNmkDNZcZk

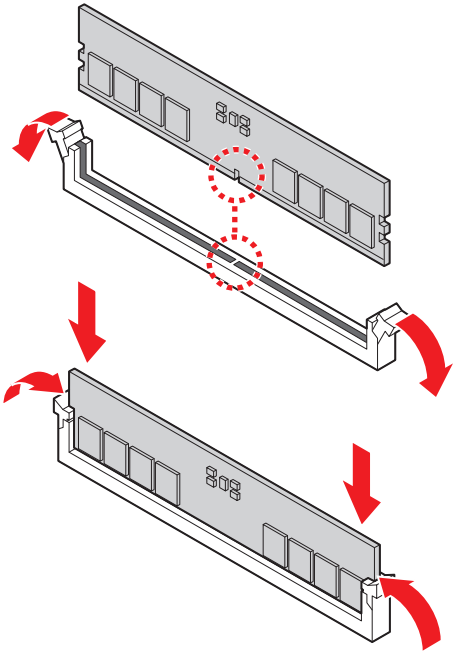

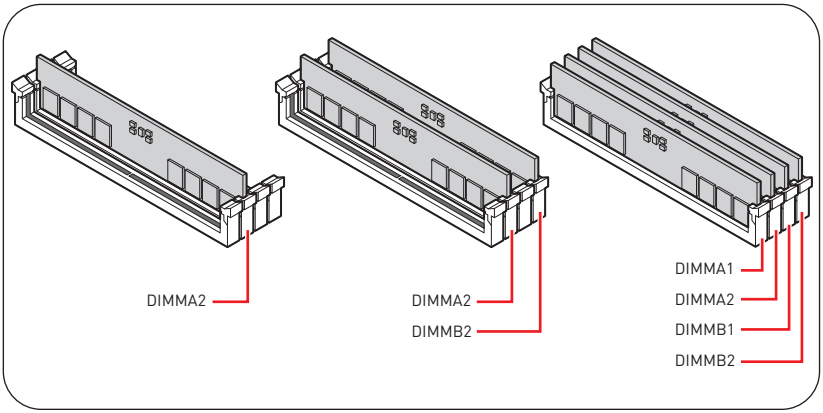

Connecting the Front Panel Header

- http://youtu.be/DPELIdVNZUI

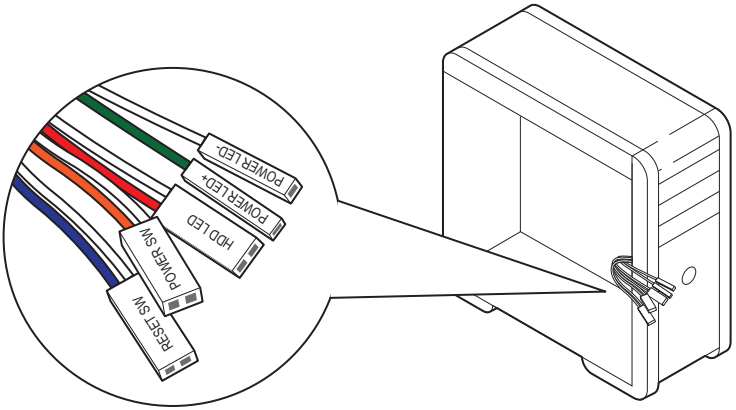

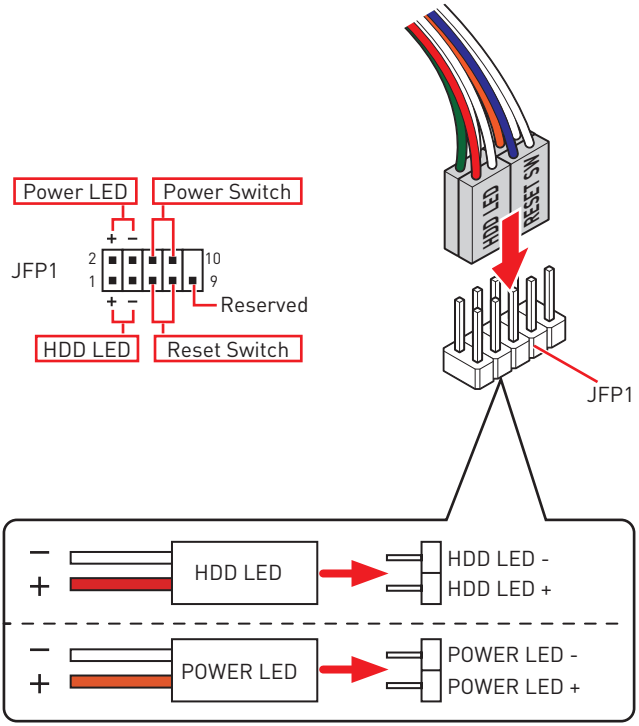

Installing the Motherboard

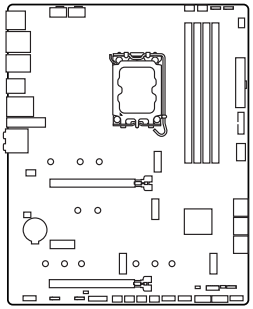

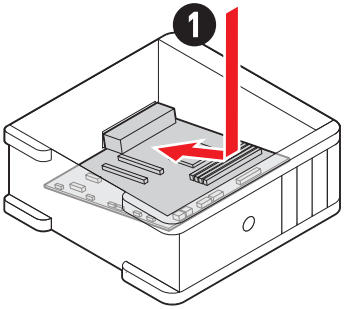

- https://youtu.be/wWI6Qt51Wnc

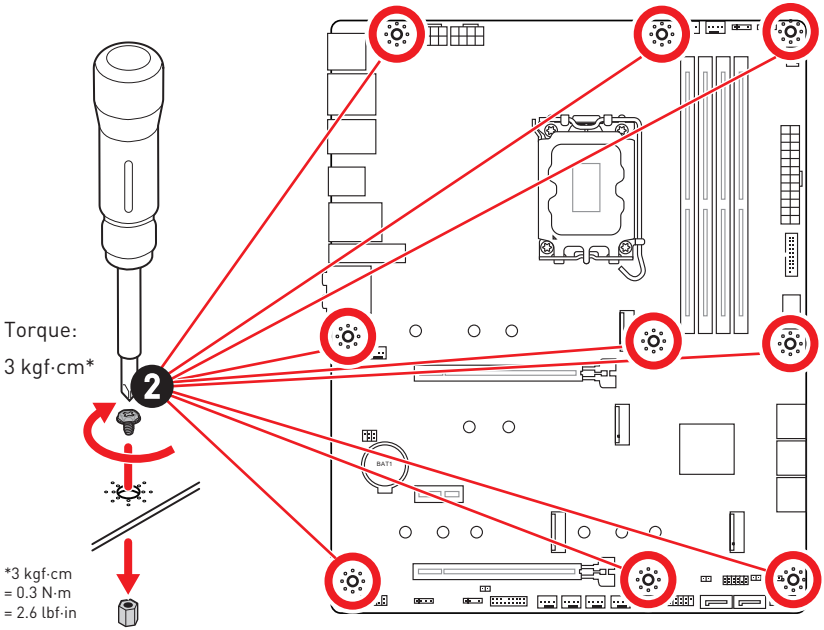

Connecting the Power Connectors

- http://youtu.be/gkDYyR_83I4

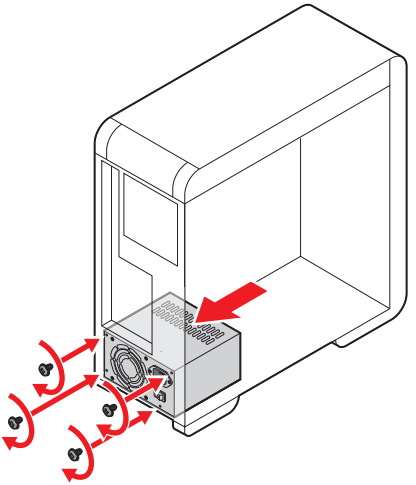

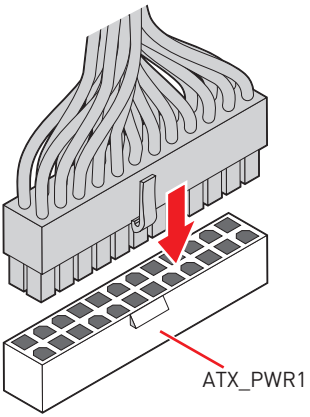

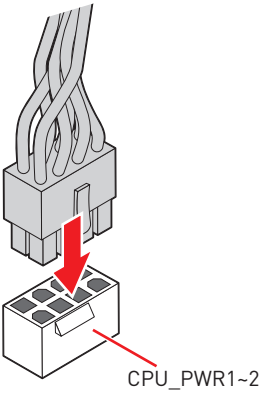

Installing SATA Drives

- http://youtu.be/RZsMpqxythc

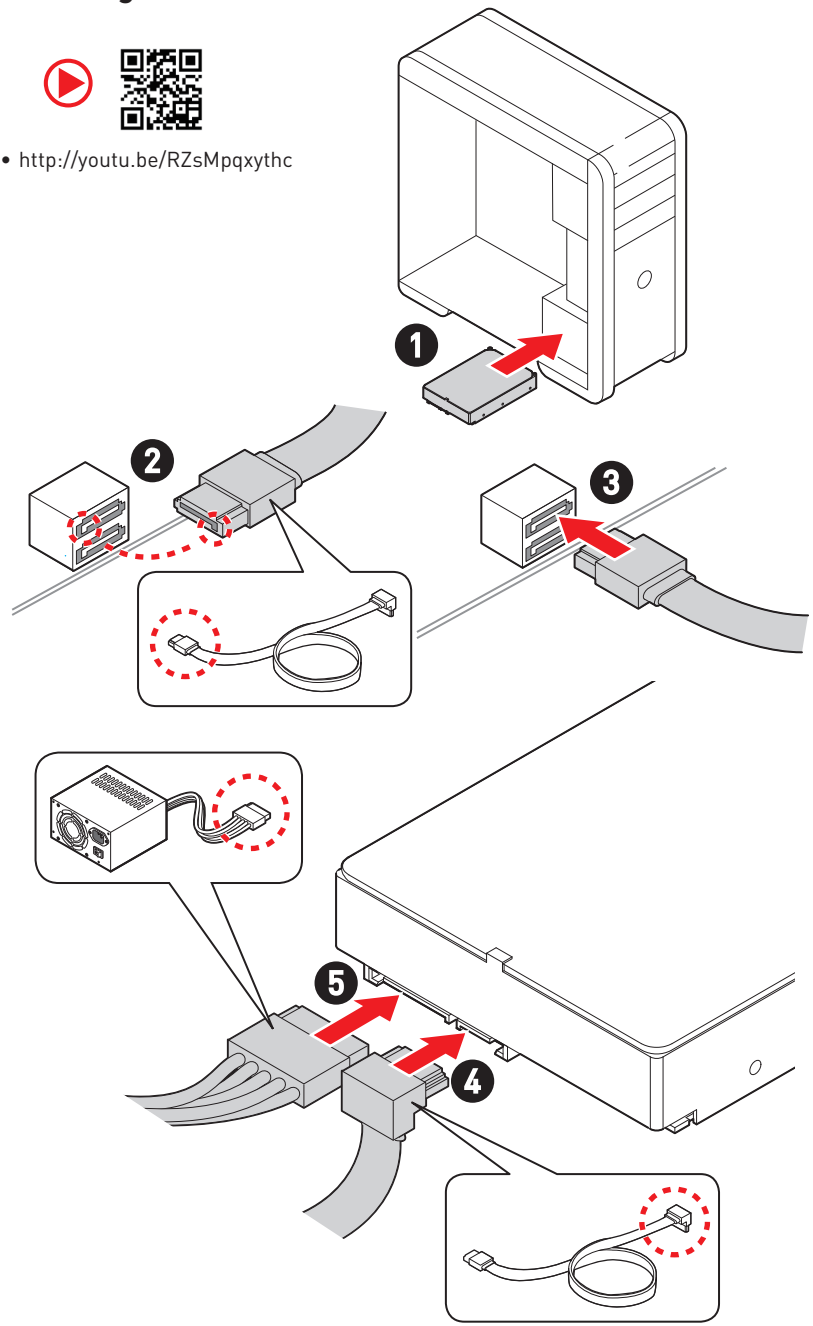

Installing a Graphics Card

- http://youtu.be/mG0GZpr9w_A

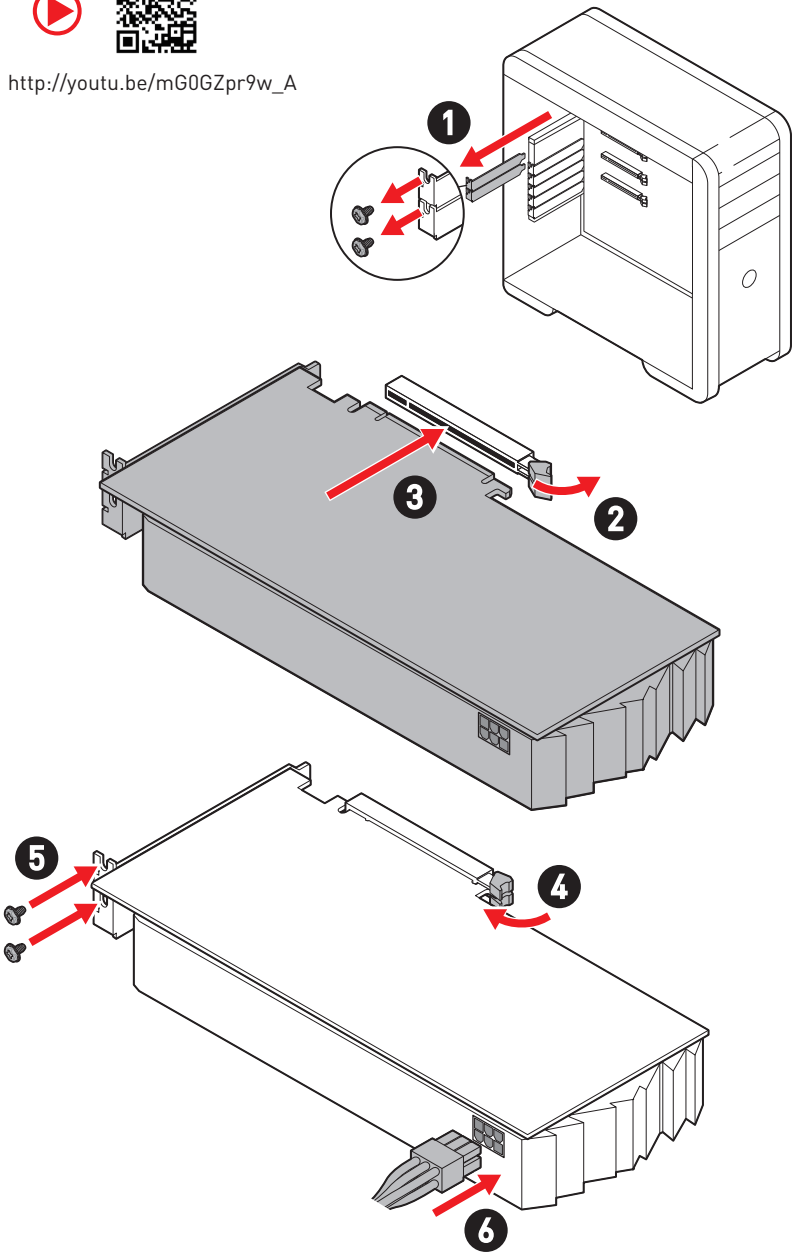

Connecting Peripheral Devices

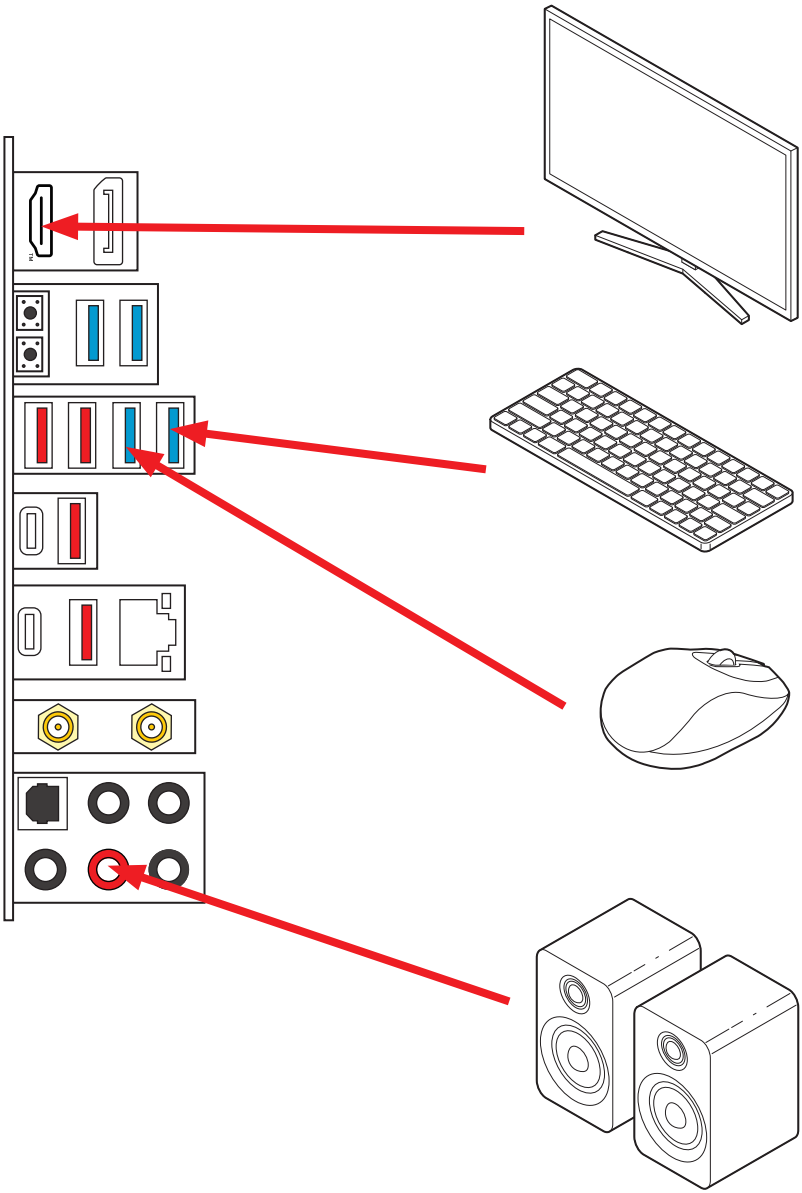

Power On

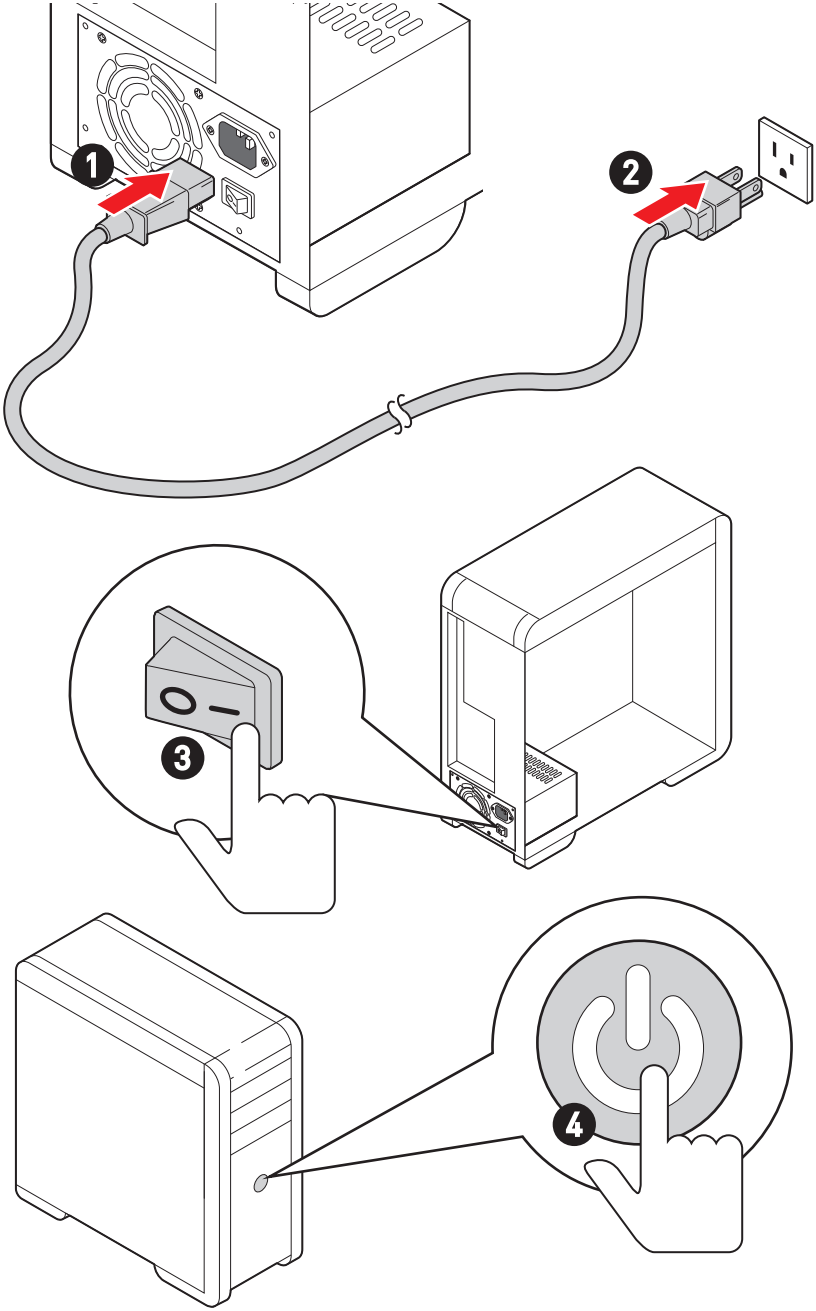

Specifications

CPU	• Supports Intel® Core™ 14th/ 13th/ 12th Gen Processors, Intel® Pentium® Gold and Celeron® Processors* • Processor socket LGA1700 * Please go to www.msi.com to get the newest support status as new processors are released.
Chipset	Intel® Z790 Chipset

Memory	• 4x DDR5 memory slots, support up to 192GB*
	• Supports 1R 5600 MHz (by JEDEC & POR)
	• Max. overclocking frequency:
	  • 1DPC 1R Max speed up to 7800+ MHz
	  • 1DPC 2R Max speed up to 6600+ MHz
	  • 2DPC 1R Max speed up to 6400+ MHz
	  • 2DPC 2R Max speed up to 5600+ MHz
	• DIMM slots with double-sided latches
	• Supports Intel® XMP3.0 OC
	• Supports Dual-Controller Dual-Channel mode
	• Supports non-ECC, un-buffered memory
	* Please refer to www.msi.com for more information on compatible memory.

Expansion Slots	• 2x PCIe x16 slots
	  • PCI_E1* slot (From CPU)
	  • Supports up to PCIe 5.0 x16
	  • PCI_E3 slot (From Z790 Chipset)
	  • Supports up to PCIe 4.0 x4
	• 1x PCIe 3.0 x1 slot
	  • PCI_E2 slot (From Z790 Chipset)
	  • Supports up to PCIe 3.0 x1
	* PCI_E1 slot will run at PCIe 5.0 x8 mode when installing M.2 PCIe SSD in the M2_1 slot.

Onboard Graphics	• 1x HDMI™ 2.1 port with HDR, supporting a maximum resolution of 4K 60Hz*/ ** • 1x DisplayPort 1.4 port with HBR3, supporting a maximum resolution of 8K 60Hz*/ ** * Available only on processors featuring integrated graphics. ** Graphics specifications may vary depending on the CPU installed.

Continued on next column

Continued from previous column

SATA Ports	• 8x SATA 6Gb/s ports
	  • SATA_1~2*& SATA_5_6& SATA_7_8 (From Z790 chipset)
	  • SATA_A1_A2 (From ASM1061)
	* SATA_1~2 will be unavailable when installing M.2 SSD in the M2_3 slot.

M.2 SSD Slots	• 4x M.2 slots (Key M)
	  • M2_1* slot (From CPU)
	  • Supports up to PCIe 5.0 x4
	  • Supports 2260/ 2280/ 22110 storage devices
	  • M2_2 slot (From Z790 chipset)
	  • Supports up to PCIe 4.0 x4
	  • Supports 2260/ 2280 storage devices
	  • M2_3** slot (From Z790 chipset)
	  • Supports up to PCIe 4.0 x4
	  • Supports up to SATA 6Gb/s
	  • Supports 2242/ 2260/ 2280 storage devices
	  • M2_4 slot (From Z790 chipset)
	  • Supports up to PCIe 4.0 x4
	  • Supports 2242/ 2260/ 2280 storage devices
	* PCI_E1 slot will run at PCIe 5.0 x8 mode when installing M.2 PCIe SSD in the M2_1 slot.
	** SATA_1~2 will be unavailable when installing M.2 SSD in the M2_3 slot.

RAID	• Supports RAID 0, RAID 1, RAID 5 and RAID 10 for SATA storage devices* • Supports RAID 0, RAID 1 , RAID 5 and RAID 10 for M.2 NVMe storage devices * SATA_A1~A2 do not support RAID function.
Audio	Realtek® ALC4080 Codec • 7.1-Channel USB High Performance Audio • Supports up to 32-bit/384kHz playback on front panel • Supports S/PDIF output
LAN	• 1x Intel® 2.5Gbps LAN controller

Continued on next column

Continued from previous column

Wi-Fi & Bluetooth®	Wi-Fi 7 • The Wireless module is pre-installed in the M.2 (Key-E) slot • Supports MU-MIMO TX/RX, 2.4GHz/ 5GHz/ 6GHz*(320MHz) up to 5.8Gbps • Supports 802.11 a/ b/ g/ n/ ac/ ax/ be • Supports Bluetooth® 5.4**, MLO, 4KQAM * 6GHz band support may depend on every country's regulations and Wi-Fi 7 will be ready in Windows 11 SV3. ** The Bluetooth version may be updated. Please refer to the Wi-Fi chipset vendor's website for details. Bluetooth 5.4 support schedule depends on MSFT Windows 11 plan.
Power Connectors	• 1x 24-pin ATX main power connector • 2x 8-pin +12V power connectors

Internal USB Connectors	• 1x USB 3.2 Gen 2 10Gbps Type-C front panel connector (From Z790 chipset)
	• 1x USB 3.2 Gen 1 5Gbps connector (From Hub GL3523)
	  • Supports additional 2 USB 3.2 Gen 1 5Gbps ports
	• 2x USB 2.0 Type-A connectors (From Hub GL850G)
	  • Supports additional 4 USB 2.0 ports

Fan Connectors	• 1x 4-pin CPU fan connector • 1x 4-pin water-pump fan connector • 6x 4-pin system fan connectors
System Connectors	• 1x Front panel audio connector • 2x System panel connectors • 1x Chassis intrusion connector • 1x TPM module connector • 1x Tuning controller connector • 1x USB4 expansion card connector (Supports RTD3)
Jumpers	• 1x Clear CMOS jumper • 1x OC safe boot jumper
LED Features	• 1x 4-pin RGB LED connector • 3x 3-pin ARGB Gen2 LED connectors • 4x EZ Debug LED

Continued on next column

Continued from previous column

Back Panel Connectors	• 1x DisplayPort • 1x HDMI™ port • 1x Clear CMOS button • 1x Flash BIOS button • 4x USB 3.2 Gen 1 5Gbps Type-A ports (From Hub GL3523) • 4x USB 3.2 Gen 2 10Gbps Type-A ports (From Z790 chipset) • 1x USB 3.2 Gen 2 10Gbps Type-C port (From Z790 chipset) • 1x USB 3.2 Gen 2x2 20Gbps Type-C port (From Z790 chipset) • 1x 2.5Gbps LAN (RJ45) port • 2x Wi-Fi antenna connectors • 5x Audio jacks • 1x Optical S/PDIF Out connector
I/O Controller	NUVOTON NCT6687D-M Controller Chip
Hardware Monitor	• CPU/ System/ Chipset temperature detection • CPU/ System/ Pump fan speed detection • CPU/ System/ Pump fan speed control
Form Factor	• ATX Form Factor • 9.6 in. x 12 in. (244 mm x 305 mm)
BIOS Features	• 1x 256 Mb flash • UEFI AMI BIOS • ACPI 6.4, SMBIOS 3.5 • Multi-language
Software	• Drivers • MSI Center • Intel Extreme Tuning Utility • CPU-Z MSI GAMING • Norton 360 • AIDA64 Extreme - MSI Edition • MSI APP Player (BlueStacks) • Adobe Creative Cloud • Acrobat

Special Features

MSI Center Features

- Gaming Mode
- Smart Priority
- Game Highlights
- Mystic light
- Ambient Link
- Frozr AI Cooling
- User Scenario
- True Color
- Live Update
- Hardware Monitoring
- Super Charger
- Devices Speed Up
- Smart Image Finder
- MSI Companion
- System Diagnosis

Thermal Features

- Extended Heatsink Design
- M.2 Shield Frozr
- K7 MOSFET thermal pad / Extra choke pad
- Fan headers (CPU + PUMP + SYSTEM)

Performance

- Core Boost
- Dual CPU Power
- Memory Boost
- Lightning Gen 5 PCI-E / M.2 Slot
- Lightning Gen 4 PCI-E / M.2 Slot
- Lightning USB 20G
- Front USB Type-C
- Server Grade PCB
- 2oz Copper thickened PCB

DIY Friendly

- PCI-E Steel Armor
- Pre-installed I/O Shield
- Screwless M.2 Shield Frozr
- EZ M.2 Clips
- EZ DEBUG LED
- EZ LED Control
- Flash BIOS Button

Audio

- Audio Boost 5

RGB Support

- Mystic Light
- Mystic Light Extension (RGB)
- Mystic Light Extension (ARGB Gen2)
- Ambient Devices Support

BIOS

- Click BIOS 5

Package Contents

Please check the contents of your motherboard package. It should contain:

Board

- 1x Motherboard

Documentation

- 1x Quick installation guide
- 1x European Union regulatory notice

Application

- 1x USB drive with drivers & utilities

Cables

- 1x Front panel cable
- 2x SATA 6Gb/s cables

Accessories

- 1x Wi-Fi antenna set
- 2x EZ M.2 Clip packages (1 set/pack)
- 1x Cable sticker

Important

- *There is an ISO file in the supplied USB drive. Please do not delete it accidentally. For more information on installing drivers, please refer to* ***Installing OS, Drivers & MSI Center*** *chapter.*
- *If any of the above items are damaged or missing, please contact your retailer.*

Back Panel Connectors

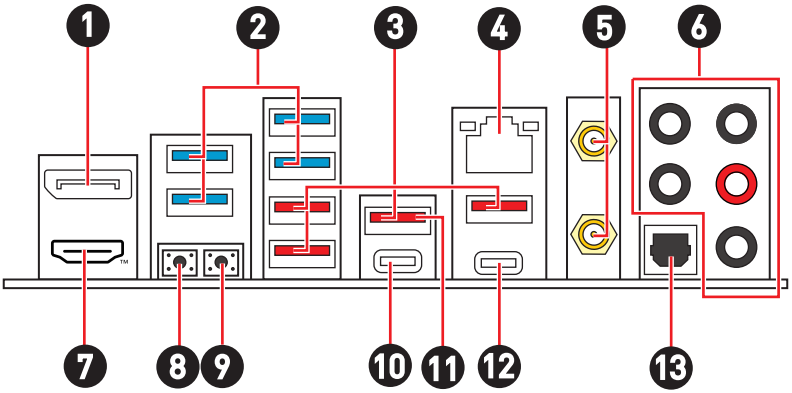

Item	Description
1	DisplayPort
2	USB 3.2 Gen 1 5Gbps Type-A ports (From Hub GL3523)
3	USB 3.2 Gen 2 10Gbps Type-A ports (From Z790 chipset)
4	2.5 Gbps LAN (RJ45) port
5	Wi-Fi antenna connectors
6	Audio jacks
7	HDMI™ port HIGH-DEFINITION MULTIMEDIA INTERFACE
8	Clear CMOS button • Power off your computer. Press and hold the Clear CMOS button for about 5-10 seconds to reset BIOS to default values.
9	Flash BIOS button • Please refer to page 60 for details about updating BIOS with Flash BIOS button.
10	USB 3.2 Gen 2 10Gbps Type-C port (From Z790 chipset)
11	Flash BIOS port
12	USB 3.2 Gen 2x2 20Gbps Type-C port (From Z790 chipset)
13	Optical S/PDIF Out connector

LAN Port LED Status Table

Link/ Activity LED	
Status	**Description**
Off	No link
Yellow	Linked
Blinking	Data activity

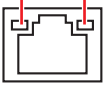

Speed LED	
Status	**Speed**
Off	10 Mbps
Green	100/1000 Mbps
Orange	2.5 Gbps

Audio Jacks Connection

Audio jacks to headphone and microphone diagram

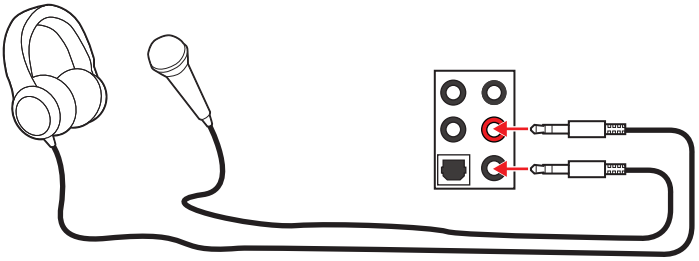

Audio jacks to stereo speakers diagram

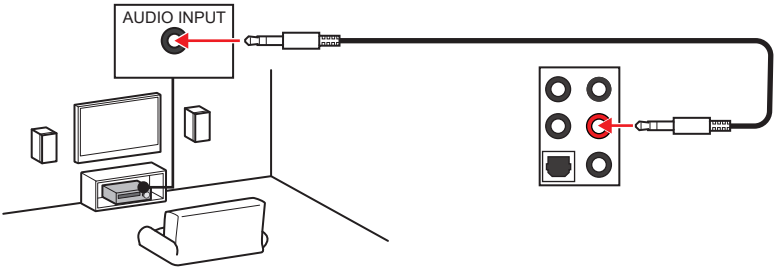

Audio jacks to 4-channel speakers diagram

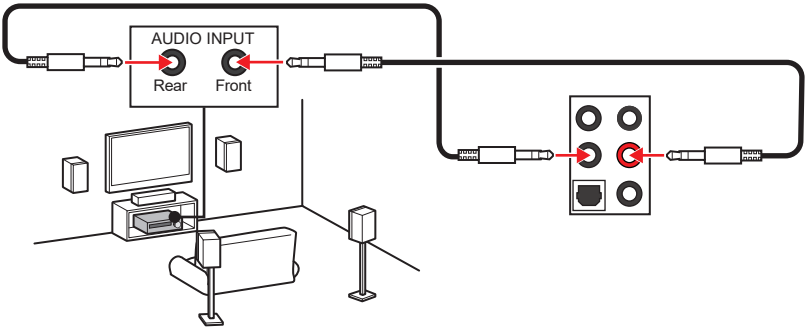

Audio jacks to 5.1-channel speakers diagram

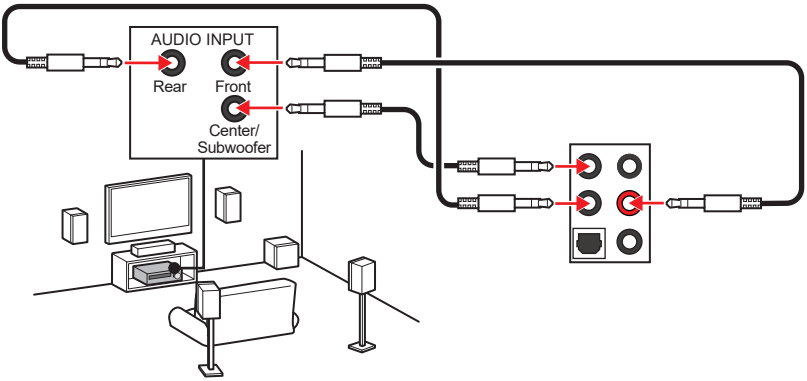

Audio jacks to 7.1-channel speakers diagram

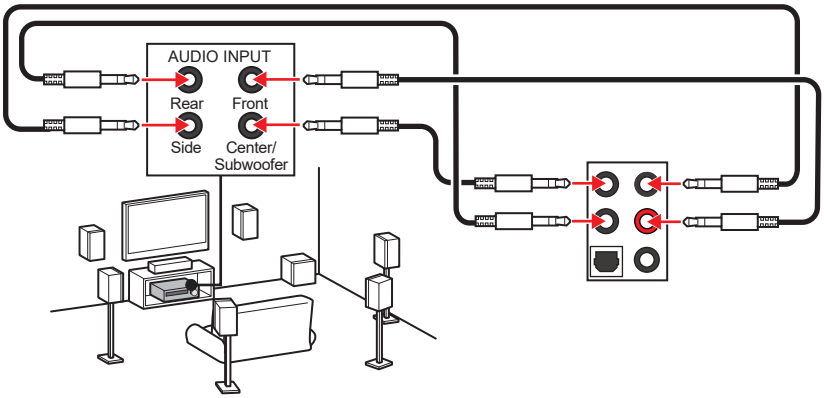

Installing Antennas

1. Screw two antenna cables tight to the Wi-Fi antenna connectors as shown.

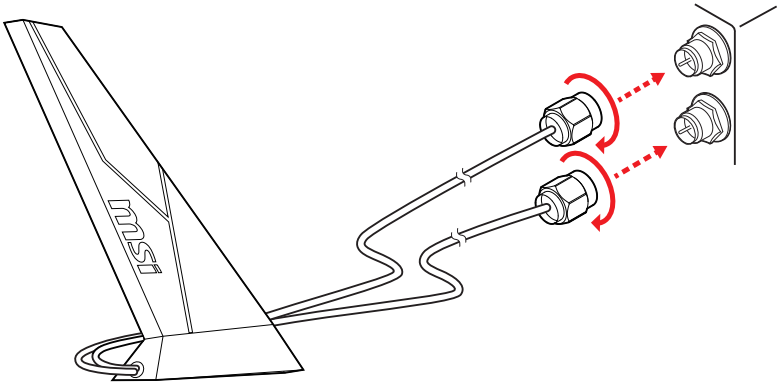

2. Place the antenna as high as possible.

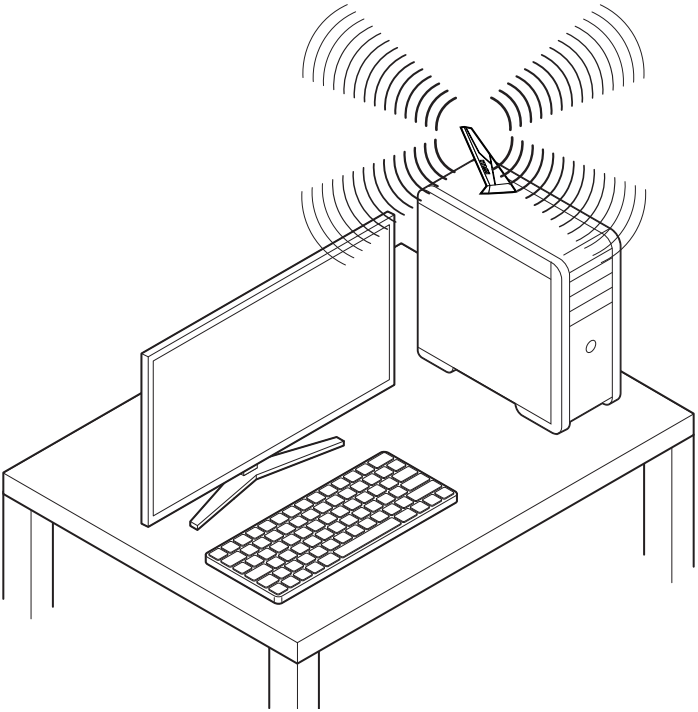

Overview of Components

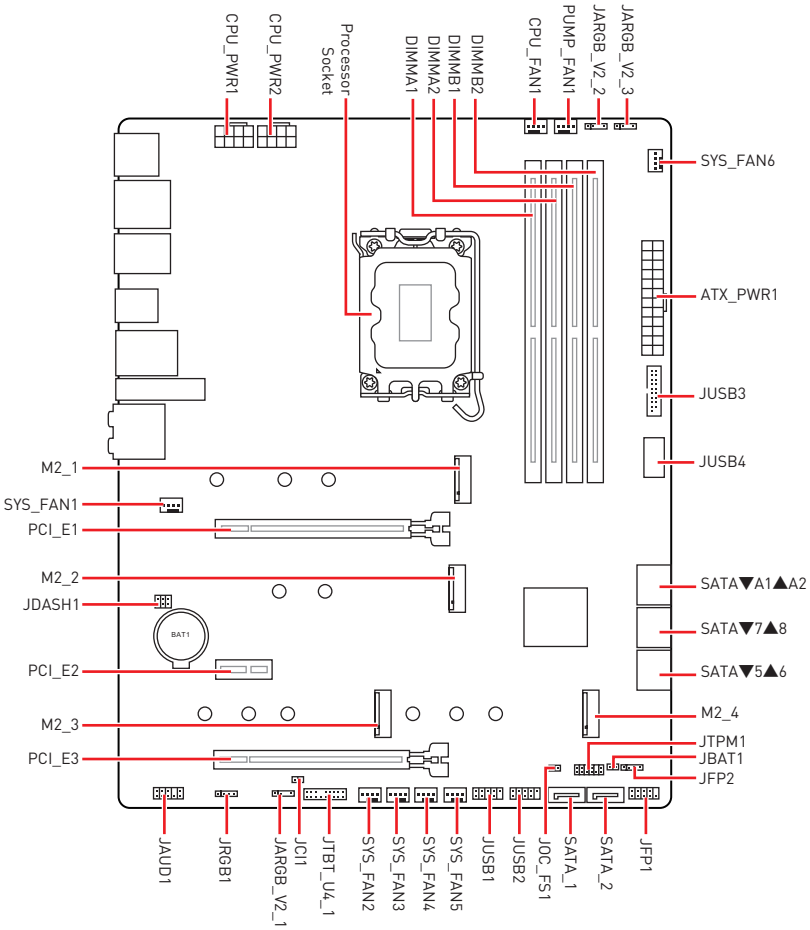

CPU Socket

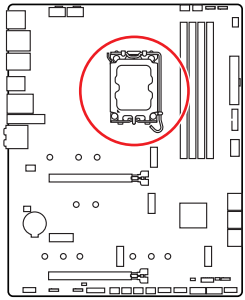

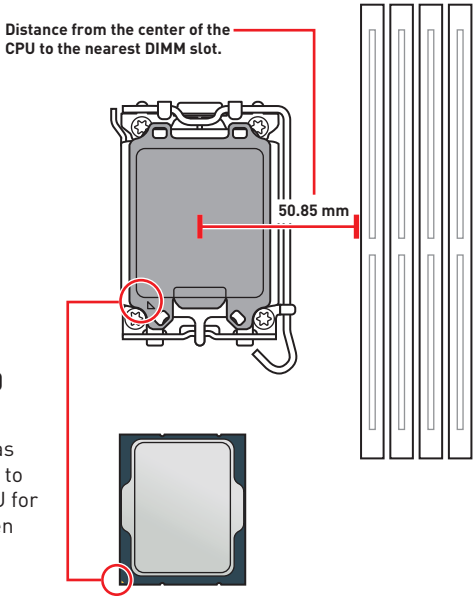

Introduction to the LGA1700 CPU

The surface of the LGA1700 CPU has four **notches** and a **golden triangle** to assist in correctly lining up the CPU for motherboard placement. The golden triangle is the Pin 1 indicator.

Important

- *Always unplug the power cord from the power outlet before installing or removing the CPU.*
- *Please retain the CPU protective cap after installing the processor. MSI will deal with Return Merchandise Authorization (RMA) requests if only the motherboard comes with the protective cap on the CPU socket.*
- *When installing a CPU, always remember to install a CPU heatsink. A CPU heatsink is necessary to prevent overheating and maintain system stability.*
- *Confirm that the CPU heatsink has formed a tight seal with the CPU before booting your system.*
- *Overheating can seriously damage the CPU and motherboard. Always make sure the cooling fans work properly to protect the CPU from overheating. Be sure to apply an even layer of thermal paste (or thermal tape) between the CPU and the heatsink to enhance heat dissipation.*
- *Whenever the CPU is not installed, always protect the CPU socket pins by covering the socket with the plastic cap.*
- *If you purchased a separate CPU and heatsink/ cooler, Please refer to the documentation in the heatsink/ cooler package for more details about installation.*
- *This motherboard is designed to support overclocking. Before attempting to overclock, please make sure that all other system components can tolerate overclocking. Any attempt to operate beyond product specifications is not recommended. MSI® does not guarantee the damages or risks caused by inadequate operation beyond product specifications.*

DIMM Slots

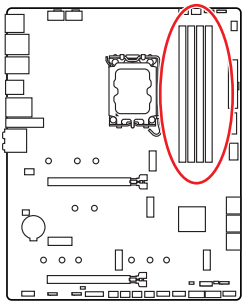

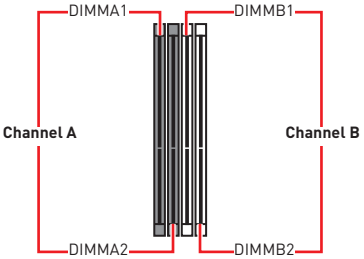

Memory module installation recommendation

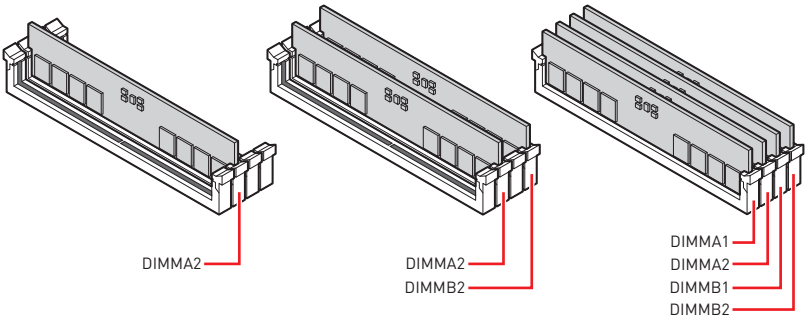

Important

- *Always insert memory modules in the **DIMMA2** slot first.*
- *To ensure system stability for Dual channel mode, memory modules must be of the same type, number and density.*
- *Some memory modules may operate at a lower frequency than the marked value when overclocking due to the memory frequency operates dependent on its Serial Presence Detect (SPD). Go to BIOS and find the **DRAM Frequency** to set the memory frequency if you want to operate the memory at the marked or at a higher frequency.*
- *It is recommended to use a more efficient memory cooling system for full DIMMs installation or overclocking.*
- *The stability and compatibility of installed memory module depend on installed CPU and devices when overclocking.*
- *Please refer to www.msi.com for more information on compatible memory.*

PCI_E1~3: PCIe Expansion Slots

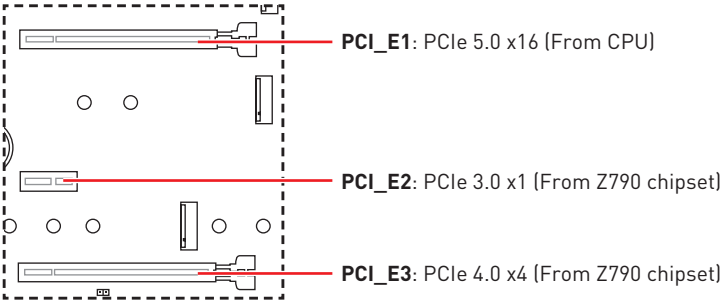

Important

- *If you install a large and heavy graphics card, you need to use a tool such as **MSI Graphics Card Bolster** to support its weight to prevent deformation of the slot.*
- *For a single PCIe x16 expansion card installation with optimum performance, using the **PCI_E1** slot is recommended.*
- *When adding or removing expansion cards, always turn off the power supply and unplug the power supply power cable from the power outlet. Read the expansion card's documentation to check for any necessary additional hardware or software changes.*
- *PCI_E1 slot will run at PCIe 5.0 x8 mode when installing M.2 PCIe SSD in the M2_1 slot.*

M2_1~4: M.2 Slots (Key M)

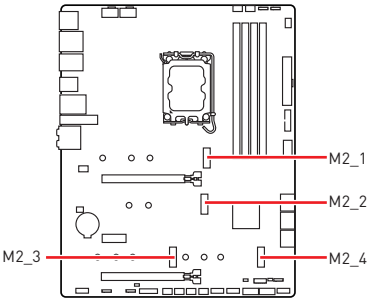

- https://youtu.be/J88vcXeLido

Important

- *Intel® RST only supports PCIe M.2 SSD with UEFI ROM.*
- *If your M.2 SSD equips its own heatsink, please remove the M.2 plates or rubber cubes in the M.2 slots before installing M.2 SSD. Do not re-install the heatsinks supplied with your motherboard.*
- *SATA_1~2 will be unavailable when installing M.2 SSD in the M2_3 slot.*
- *PCI_E1 slot will run at PCIe 5.0 x8 mode when installing M.2 PCIe SSD in the M2_1 slot.*

Installing M.2 module into M2_1 slot

1. Remove the film on Screwless M.2 Shield Frozr heatsink.
2. Press and hold the end button of Screwless M.2 Shield Frozr heatsink.

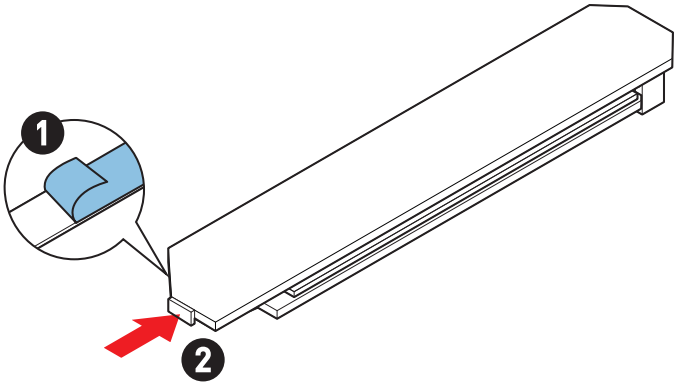

3. Slightly lift up the end part of Screwless M.2 Shield Frozr heatsink and move it forward to uninstall the heatsink.

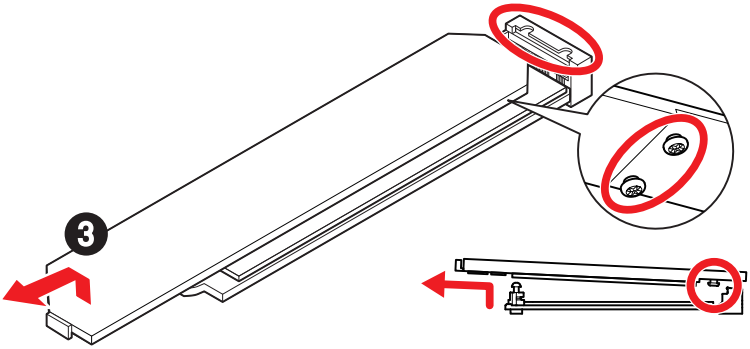

4. Remove the protective films from the M.2 thermal pads on the M.2 plate.

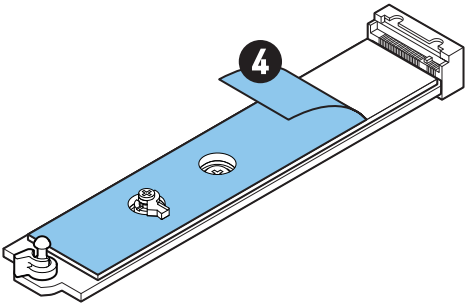

5. Remove or exchange the screws according to your SSD length. Skip this step, if you install 2280 SSD.

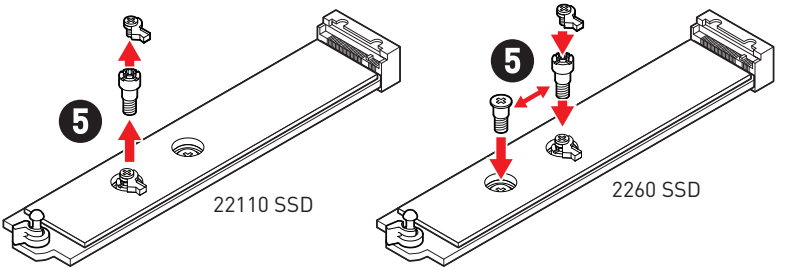

6. Insert your M.2 SSD into the M.2 slot at a 30-degree angle.
7. Rotate the EZ M.2 Clip to fix the M.2 SSD.

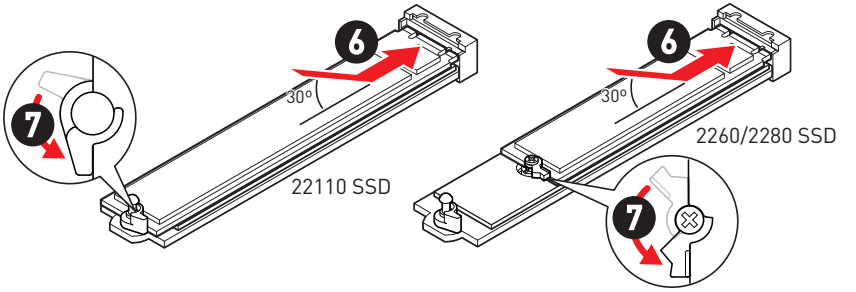

8. Remove the protective films from the thermal pads under Screwless M.2 Shield Frozr heatsink.
9. Align the tenons under Screwless M.2 Shield Frozr heatsink with the notches, and then put the heatsink back in place.
10. Press the end side of the Screwless M.2 Shield Frozr heatsink down to lock it completely.

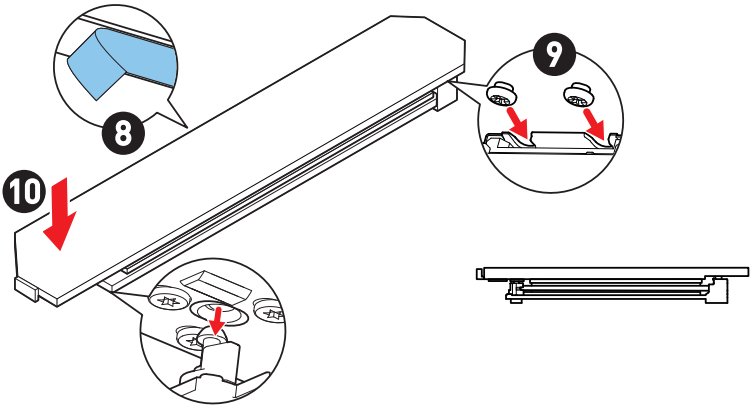

Installing M.2 module into M2_2 slot

1. Loosen the screws of M.2 Shield Frozr heatsink.
2. Lift up the M.2 Shield Frozr heatsink and remove it.

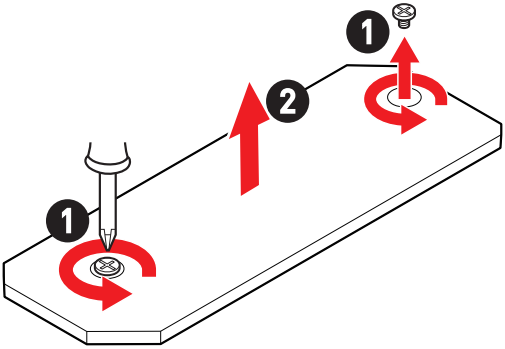

3. If you want to install 2260 M.2 SSD, please install the supplied EZ M.2 Clip kit in the 2260 screw hole. Skip this step, if you install 2280 SSD.

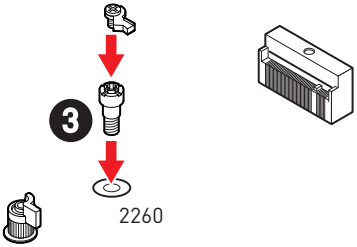

4. Insert your M.2 SSD into the M.2 slot at a 30-degree angle.
5. Rotate the EZ M.2 Clip to fix the M.2 SSD.

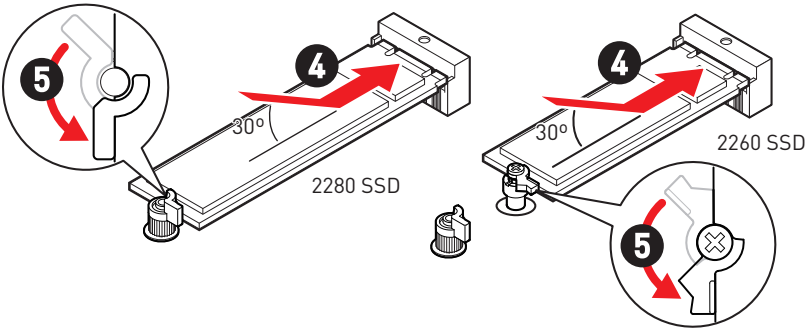

6. Remove the protective film from the thermal pad under the M.2 Shield Frozr heatsink.
7. Put the M.2 Shield Frozr heatsink back in place and secure it.

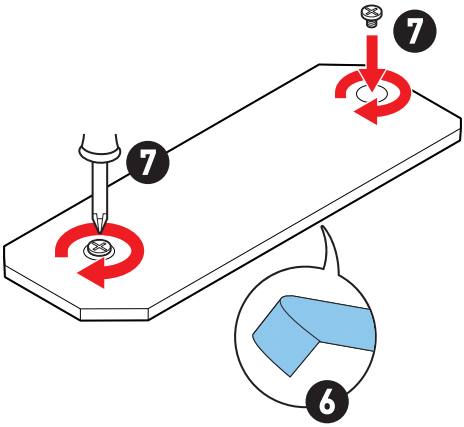

Installing M.2 module into M2_3 & M2_4 slots

1. Loosen the screws of M.2 Shield Frozr heatsink.
2. Lift up the M.2 Shield Frozr heatsink and remove it.

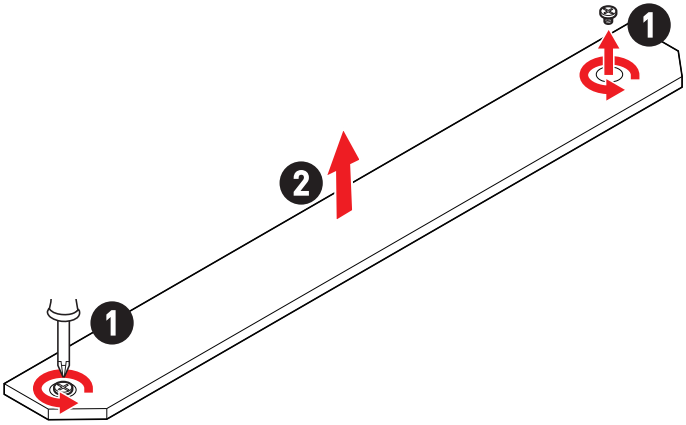

3. If you want to install 2242 or 2260 M.2 SSD, please install the supplied EZ M.2 Clip kit in the 2240 or 2260 screw hole. Skip this step, if you install 2280 SSD.

- **M2_3 slot**

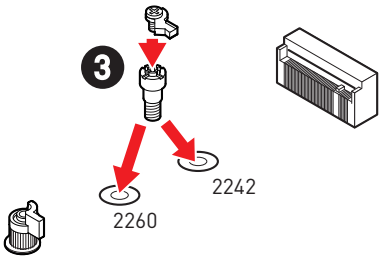

- **M2_4 slot**

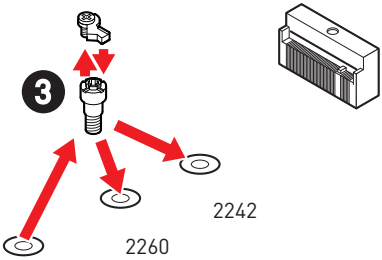

4. Insert your M.2 SSD into the M.2 slot at a 30-degree angle.
5. Rotate the EZ M.2 Clip to fix the M.2 SSD.

- **M2_3 slot**

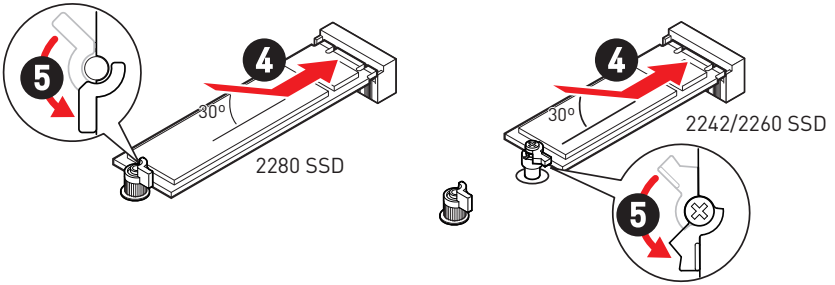

- **M2_4 slot**

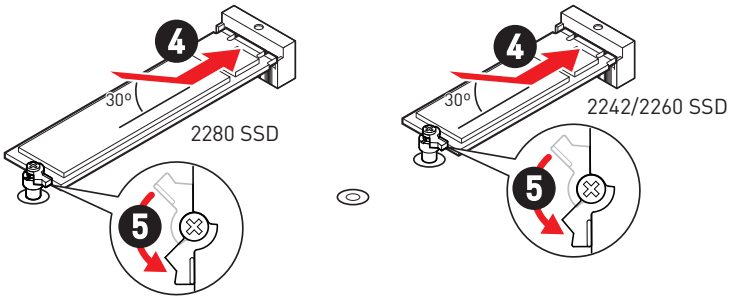

6. Remove the protective film from the thermal pad under the M.2 Shield Frozr heatsink.
7. Put the M.2 Shield Frozr heatsink back in place and secure it.

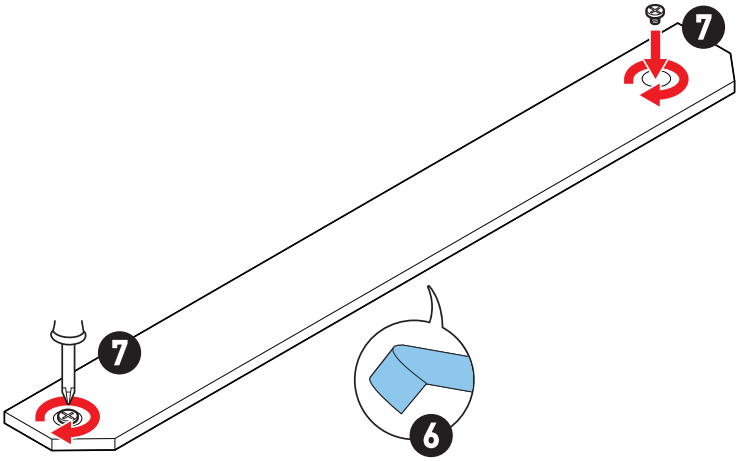

SATA_1~2, SATA_5~8 & SATA_A1~A2: SATA 6Gb/s Connectors

These connectors are SATA 6Gb/s interface ports. Each connector can connect to one SATA device.

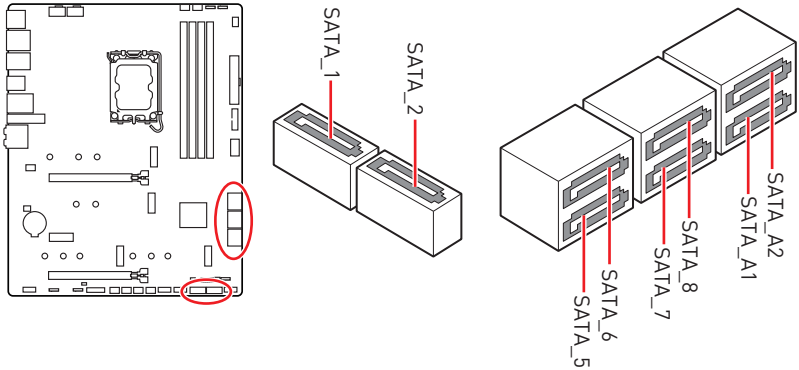

Important

- *Please do not fold the SATA cable at a 90-degree angle. Data loss may result during transmission otherwise.*
- *SATA cables have identical plugs on either sides of the cable. However, it is recommended that the flat connector be connected to the motherboard for space saving purposes.*
- *SATA_1~2 will be unavailable when installing M.2 SSD in the M2_3 slot.*

JAUD1: Front Audio Connector

This connector allows you to connect audio jacks on the front panel.

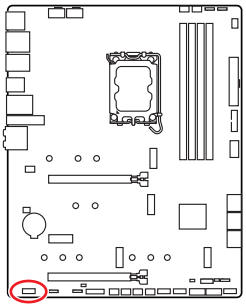

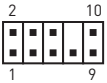

Pin	Signal Name	Pin	Signal Name
1	MIC L	2	Ground
3	MIC R	4	NC
5	Head Phone R	6	MIC Detection
7	SENSE_SEND	8	No Pin
9	Head Phone L	10	Head Phone Detection

JFP1, JFP2: Front Panel Connectors

The JFP1 connector controls the power on, power reset, and the LEDs on your PC case/chassis. Power Switch/ Reset Switch headers allow you to connect power button/ reset button. Power LED header connects to LED light on the PC case, and HDD LED header indicates the activity of the hard disk. The JFP2 connector is for Buzzer and Speaker. To connect the cables from PC case to the right pins, please refer to the following images below.

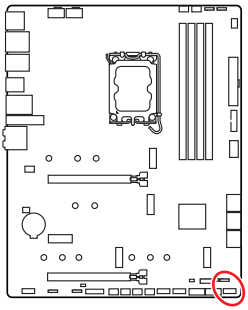

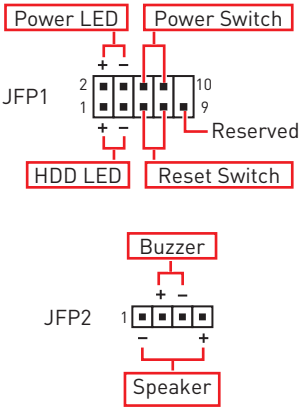

Important

Please note that Power LED and HDD LED have positive and negative connection, you need to link up the cable to the corresponding positive and negative port on the motherboard. Otherwise, LEDs won't work properly.

JDASH1 : Tuning Controller Connector

This connector is used to connect an optional Tuning Controller module.

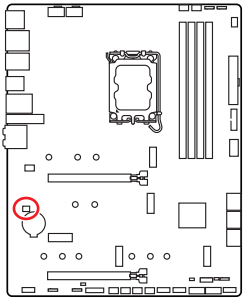

Pin	Signal Name	Pin	Signal Name
1	No Pin	2	NC
3	MCU_SMB_SCL_M	4	MCU_SMB_SDA_M
5	VCC5	6	Ground

JCI1: Chassis Intrusion Connector

This connector allows you to connect the chassis intrusion switch cable.

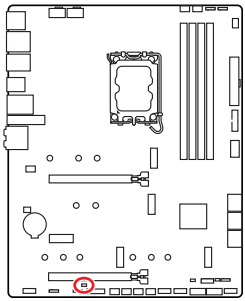

Normal (default)

Trigger the chassis intrusion event

Using chassis intrusion detector

1. Connect the **JCI1** connector to the chassis intrusion switch/ sensor on the chassis.
2. Close the chassis cover.
3. Go to **BIOS > SETTINGS > Security > Chassis Intrusion Configuration**.
4. Set **Chassis Intrusion** to **Enabled**.
5. Press **F10** to save and exit and then press the **Enter** key to select **Yes**.
6. Once the chassis cover is opened again, a warning message will be displayed on screen when the computer is turned on.

Resetting the chassis intrusion warning

1. Go to **BIOS > SETTINGS > Security > Chassis Intrusion Configuration**.
2. Set **Chassis Intrusion** to **Reset**.
3. Press **F10** to save and exit and then press the Enter key to select **Yes**.

CPU_PWR1~2, ATX_PWR1: Power Connectors

These connectors allow you to connect an ATX power supply.

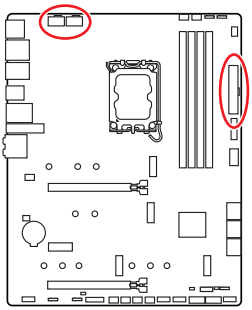

CPU_PWR1~2

ATX_PWR1

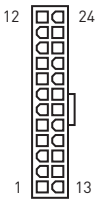

CPU_PWR1~2

Pin	Signal Name	Pin	Signal Name
1	Ground	2	Ground
3	Ground	4	Ground
5	+12V	6	+12V
7	+12V	8	+12V

ATX_PWR1

Pin	Signal Name	Pin	Signal Name
1	+3.3V	2	+3.3V
3	Ground	4	+5V
5	Ground	6	+5V
7	Ground	8	PWR OK
9	5VSB	10	+12V
11	+12V	12	+3.3V
13	+3.3V	14	-12V
15	Ground	16	PS-ON#
17	Ground	18	Ground
19	Ground	20	Res
21	+5V	22	+5V
23	+5V	24	Ground

Important

Make sure that all the power cables are securely connected to a proper ATX power supply to ensure stable operation of the motherboard.

JUSB4: USB 3.2 Gen 2 Type-C Front Panel Connector

This connector allows you to connect USB 3.2 Gen 2 10Gbps Type-C connector on the front panel. The connector has a foolproof design. When you connect the cable, be sure to connect it with the corresponding orientation.

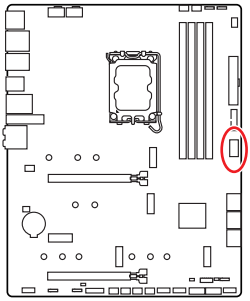

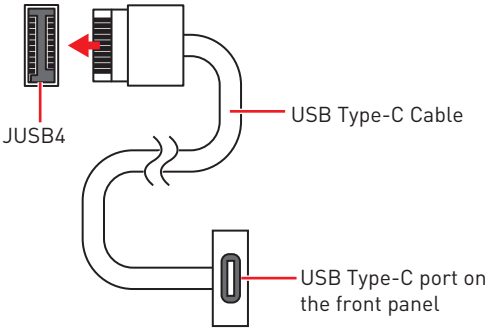

JUSB3: USB 3.2 Gen 1 Connector

This connector allows you to connect USB 3.2 Gen 1 5Gbps ports on the front panel.

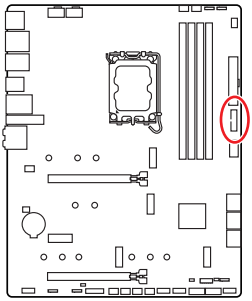

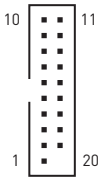

Pin	Signal Name	Pin	Signal Name
1	Power	2	USB3_RX_DN
3	USB3_RX_DP	4	Ground
5	USB3_TX_C_DN	6	USB3_TX_C_DP
7	Ground	8	USB2.0-
9	USB2.0+	10	Ground
11	USB2.0+	12	USB2.0-
13	Ground	14	USB3_TX_C_DP
15	USB3_TX_C_DN	16	Ground
17	USB3_RX_DP	18	USB3_RX_DN
19	Power	20	No Pin

Important

Note that the Power and Ground pins must be connected correctly to avoid possible damage.

JUSB1~2: USB 2.0 Connectors

These connectors allow you to connect USB 2.0 ports on the front panel.

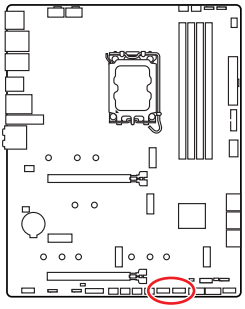

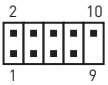

Pin	Signal Name	Pin	Signal Name
1	VCC	2	VCC
3	USB0-	4	USB1-
5	USB0+	6	USB1+
7	Ground	8	Ground
9	No Pin	10	NC

Important

- *Note that the VCC and Ground pins must be connected correctly to avoid possible damage.*
- *In order to recharge your iPad, iPhone and iPod through USB ports, please install MSI Center utility.*

JTPM1: TPM Module Connector

This connector is for TPM (Trusted Platform Module). Please refer to the TPM security platform manual for more details and usages.

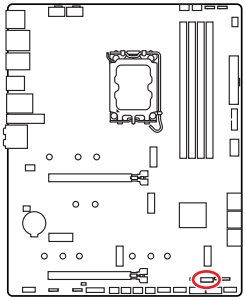

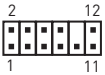

Pin	Signal Name	Pin	Signal Name
1	SPI Power	2	SPI Chip Select
3	Master In Slave Out (SPI Data)	4	Master Out Slave In (SPI Data)
5	Reserved	6	SPI Clock
7	Ground	8	SPI Reset
9	Reserved	10	No Pin
11	Reserved	12	Interrupt Request

JOC_FS1: Safe Boot Jumper

This jumper is used for Safe Boot. Once enabled, the system will boot with default settings and lower PCIe (from CPU) mode.

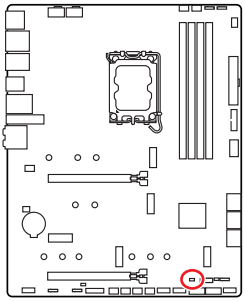

Normal

(default)

Boot with the saved BIOS settings.

Enabled

Apply the BIOS default settings and lower PCIe (from CPU) mode for Safe Boot

JTBT_U4_1: USB4 Expansion Card Connector

This connector allows you to connect MSI USB4 PD100W Expansion Card.

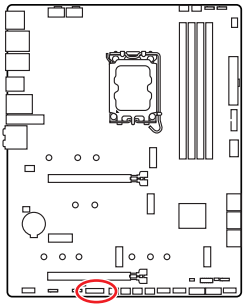

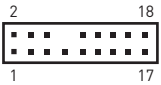

Pin	Signal Name	Pin	Signal Name
1	TBT_FORCE_PWR	2	TBT_S0IX_ENTRY_REQ
3	TBT_CIO_PLUG_EVENT#	4	TBT_S0IX_ENTRY_ACK
5	SLP_S3#_TBT	6	TBT_PSON_ OVERRIDE_N
7	SLP_S5#_TBT	8	No Pin
9	Ground	10	SMBCLK_VSB
11	DG_PEWAKE#	12	SMBDATA_VSB
13	TBT_RTD3_PWR_EN	14	Ground
15	TBT_CARD_DET_R#	16	PD_IRQ#
17	GPP_C22	18	GPP_E3

CPU_FAN1, PUMP_FAN1, SYS_FAN1~6: Fan Connectors

Fan connectors can be classified as PWM (Pulse Width Modulation) Mode or DC Mode. PWM Mode fan connectors provide constant 12V output and adjust fan speed with speed control signal. DC Mode fan connectors control fan speed by changing voltage. The auto mode fan connectors can automatically detect PWM and DC mode.

You can control fans in **BIOS> HARDWARE MONITOR** panel. It allows you to set DC or PWM to your fan type. Check the **Smart Fan Mode**, the fan speed will change according to the CPU or system temperature. Uncheck the **Smart Fan Mode**, the fan will spin at maximum speed.

Important

Make sure fans are working properly after switching the PWM/ DC mode.

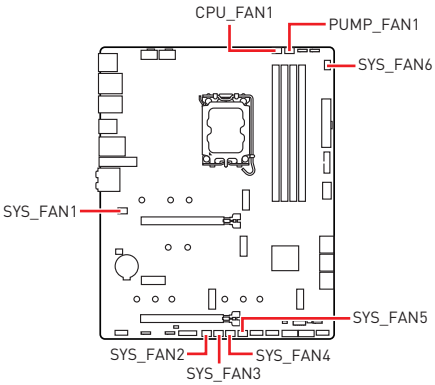

PWM Mode pin definition

Pin	Signal Name	Pin	Signal Name
1	Ground	2	+12V
3	Sense	4	Speed Control Signal

DC Mode pin definition

Pin	Signal Name	Pin	Signal Name
1	Ground	2	Voltage Control
3	Sense	4	NC

Fan connector specifications

Connector	Default fan mode	Max. current	Max. power
CPU_FAN1	Auto mode	2A	24W
PUMP_FAN1	PWM mode	3A	36W
SYS_FAN1~6	DC mode	1A	12W

JBAT1: Clear CMOS (Reset BIOS) Jumper

There is CMOS memory onboard that is external powered from a battery located on the motherboard to save system configuration data. If you want to clear the system configuration, set the jumpers to clear the CMOS memory.

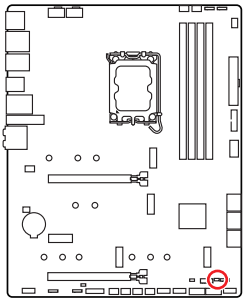

Keep Data
(default)

Clear CMOS/
Reset BIOS

Resetting BIOS to default values

1. Power off the computer and unplug the power cord.
2. Use a jumper cap to short **JBAT1** for about 5-10 seconds.
3. Remove the jumper cap from **JBAT1**.
4. Plug the power cord and Power on the computer.

BAT1: CMOS Battery

If the CMOS battery is out of charge, the time in the BIOS will be reset and the data of system configuration will be lost. In this case, you need to replace the CMOS battery.

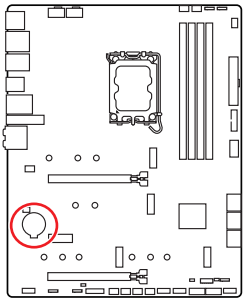

Replacing CMOS battery

1. Push the retainer clip to free the battery.
2. Remove the battery from the socket.
3. Install the new CR2032 coin-cell battery with the **+** sign facing up. Ensure that the retainer holds the battery securely.

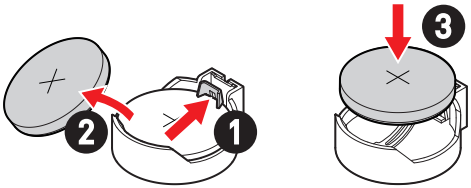

WARNING

KEEP OUT OF REACH OF CHILDREN

- *Swallowing can lead to chemical burns, perforation of soft tissue, can death.*
- *Severe burns can occur within 2 hours of ingestion.*
- *If you think batteries might have been swallowed or placed inside any part of the body, seek immediate medical attention.*

JRGB1: RGB LED Connector

The JRGB connector allows you to connect the 5050 RGB LED strips 12V.

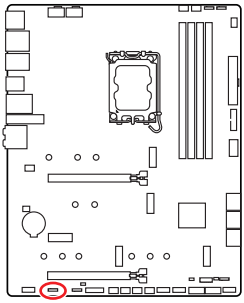

Pin	Signal Name	Pin	Signal Name
1	+12V	2	G
3	R	4	B

RGB LED Strip Connection

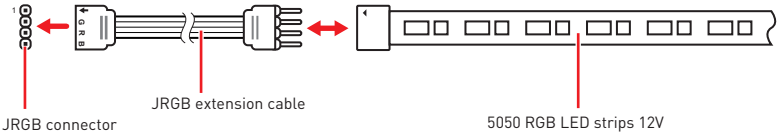

RGB LED Fan Connection

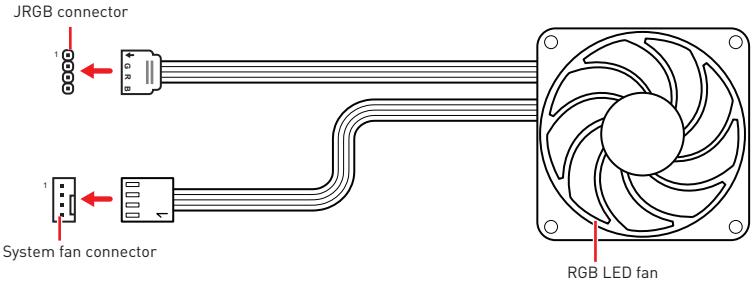

Important

- *The JRGB connector supports up to 2 meters continuous 5050 RGB LED strips (12V/G/R/B) with the maximum power rating of 3A (12V).*
- *Always turn off the power supply and unplug the power cord from the power outlet before installing or removing the RGB LED strip.*
- *Please use MSI's software to control the extended LED strip.*

JARGB_V2_1~3: A-RAINBOW V2 (ARGB Gen2) LED Connectors

The JARGB_V2 connectors allow you to connect the ARGB Gen2 and the ARGB-based LED strips. The JARGB_V2 connector supports up to 240 individually addressable RGB LEDs with maximum power rating of 3A (5V).

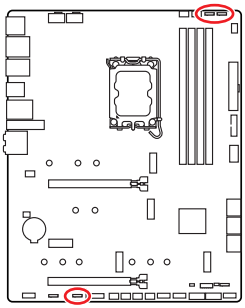

Pin	Signal Name	Pin	Signal Name
1	+5V	2	Data
3	No Pin	4	Ground

Addressable RGB LED Strip Connection

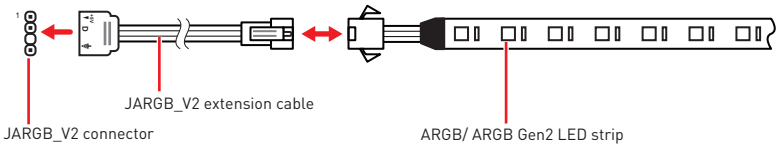

Addressable RGB LED Fan Connection

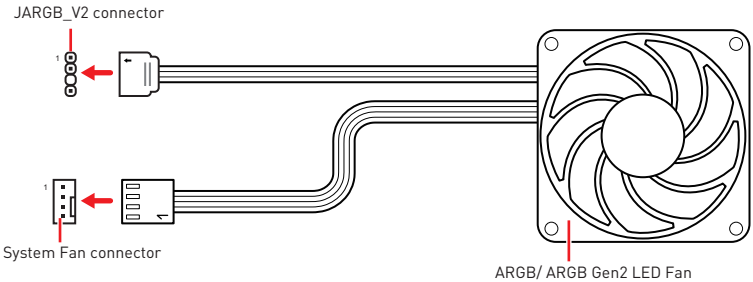

CAUTION

Do not connect the wrong type of LED strips. The JRGB connector and the JARGB_V2 connector provide different voltages, and connecting the ARGB 5V LED strip to the JRGB connector will result in damage to the LED strip.

Important

- *If you connect ARGB Gen1 and ARGB Gen2 LED strips into the same connector, it may cause issues. Please do not mix ARGB Gen1 and ARGB Gen2 LED strips together.*
- *It is recommended that you install LED strips with the same specification to achieve the best effects.*
- *Always turn off the power supply and unplug the power cord from the power outlet before installing or removing the addressable RGB LED strip.*
- *Please use MSI's software to control the extended LED strip.*

Onboard LEDs

EZ Debug LED

These LEDs indicate the debug status of the motherboard.

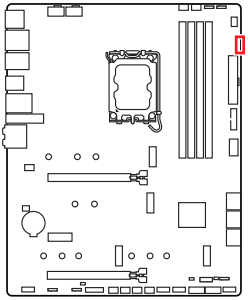

CPU - indicates CPU is not detected or fail.

DRAM - indicates DRAM is not detected or fail.

VGA - indicates GPU is not detected or fail.

BOOT - indicates the booting device is not detected or fail.

Installing OS, Drivers & MSI Center

Please download and update the latest utilities and drivers at www.msi.com

Installing Windows 11

1. Power on the computer.
2. Insert the Windows 11 installation disc/USB into your computer.
3. Press the **Restart** button on the computer case.
4. Press **F11** key during the computer POST (Power-On Self Test) to get into Boot Menu.
5. Select the Windows 11 installation disc/USB from the Boot Menu.
6. Press any key if screen shows **Press any key to boot from CD or DVD...** message. If not, please skip this step.
7. Follow the instructions on the screen to install Windows 11.

Installing Drivers with MSI Driver Utility Installer

Important

- *Some new network chips have not been natively supported by Windows 11. It is recommended that the **LAN driver** be installed before installing drivers with MSI Driver Utility Installer. Please refer to www.msi.com to install the LAN driver for your motherboard.*
- *The MSI Driver Utility Installer will only pop up once. If you cancel or close it during the process, please refer to the Live Update chapter of the MSI Center manual to install the drivers. You can also go to www.msi.com to search your motherboard and download the drivers.*
- *MSI Driver Utility Installer needs to be installed over the internet.*

1. Start up your computer in Windows 11.
2. Select Start > Settings > Windows Update, and then select Check for updates.
3. MSI Driver Utility Installer will pop up automatically.

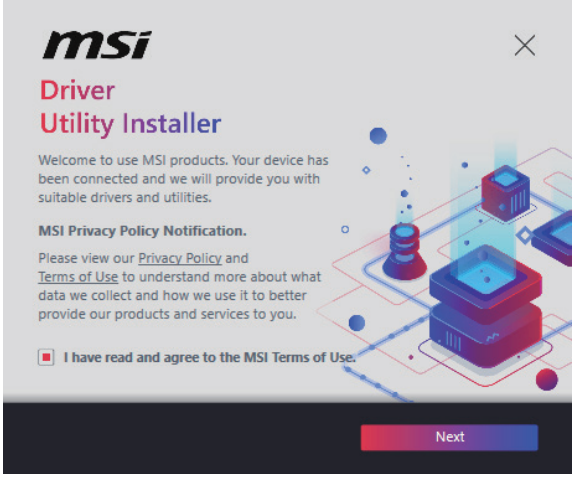

4. Select the **I have read and agree to the MSI Terms of Use** check box, and then click **Next**.

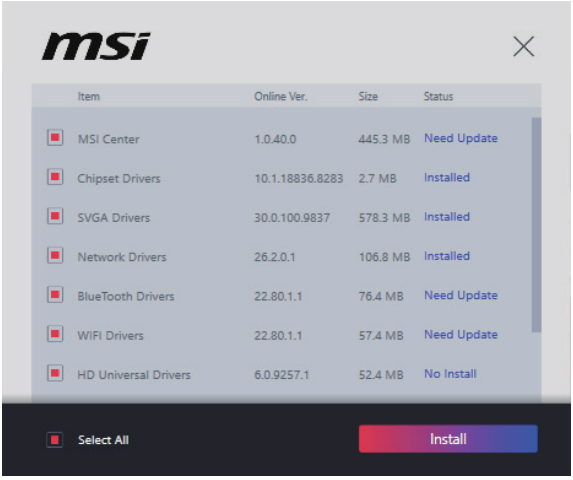

5. Check the **Select All** checkbox in the lower-left corner and click **Install** to install MSI Center and drivers. The installation progress will be shown at the bottom.

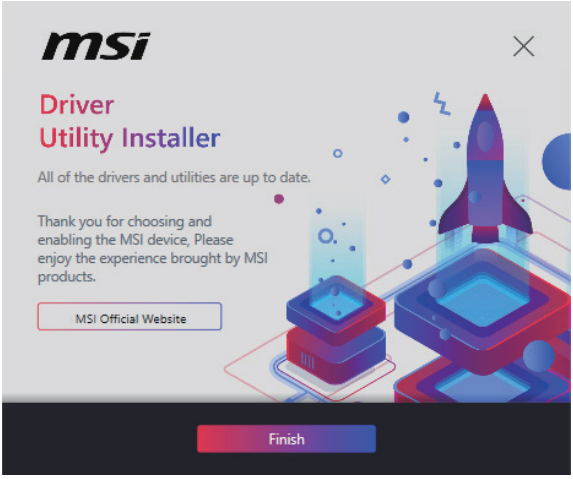

6. Once the progress has completed, click **Finish**.

Installing Drivers with MSI USB Drive

1. Start up your computer in Windows 11.
2. Insert MSI USB Drive into the USB port.
3. You can see a **Disc Image file** which contains drivers and utilities in the USB drive. Double-click the file to open it.
4. Execute an application file named **DVDSetup**.
5. The installer will find and list all necessary drivers in the **Drivers/Software** tab.
6. Click the **Install** button in the lower-right corner of the window.
7. The drivers installation will then be in progress, after it has finished it will prompt you to restart.
8. Click **OK** button to finish.
9. Restart your computer.

MSI Center

MSI Center is an application that helps you easily optimize game settings and smoothly use content creation softwares. It also allows you to control and synchronize LED light effects on PCs and other MSI products. With MSI Center, you can customize ideal modes, monitor system performance, and adjust fan speed.

MSI Center User Guide

If you would like to know more information about MSI Center, please refer to

http://download.msi.com/manual/mb/MSICENTER.pdf

or scan the QR code to access.

Important

Functions may vary depending on the product you have.

UEFI BIOS

MSI UEFI BIOS is compatible with UEFI (Unified Extensible Firmware Interface) architecture. UEFI has many new functions and advantages that traditional BIOS cannot achieve, and it will completely replace BIOS in the future. The MSI UEFI BIOS uses UEFI as the default boot mode to take full advantage of the new chipset's capabilities.

Important

The term BIOS in this user guide refers to UEFI BIOS unless otherwise noted.

UEFI advantages

- Fast booting - UEFI can directly boot the operating system and save the BIOS self-test process. And also eliminates the time to switch to CSM mode during POST.
- Supports for hard drive partitions larger than 2 TB.
- Supports more than 4 primary partitions with a GUID Partition Table (GPT).
- Supports unlimited number of partitions.
- Supports full capabilities of new devices - new devices may not provide backward compatibility.
- Supports secure startup - UEFI can check the validity of the operating system to ensure that no malware tampers with the startup process.

Incompatible UEFI cases

- **32-bit Windows operating system** - this motherboard supports only Windows 11 64-bit operating system.
- **Older graphics card** - the system will detect your graphics card. If you use older graphics cards, it may display a warning message **There is no GOP (Graphics Output protocol) support detected in this graphics card**.

Important

We recommend that you replace it with a graphics card supporting GOP/UEFI or use CPU with integrated graphics for having normal function.

How to check the BIOS mode?

1. Power on your computer.
2. Press **Delete** key, when the **Press DEL key to enter Setup Menu, F11 to enter Boot Menu** message appears on the screen during the boot process.
3. After entering the BIOS, you can check the **BIOS Mode** at the top of the screen.

BIOS Mode: **UEFI**

BIOS Setup

The default settings offer the optimal performance for system stability in normal conditions. You should **always keep the default settings** to avoid possible system damage or failure booting unless you are familiar with BIOS.

Important

- *BIOS items are continuously update for better system performance. Therefore, the description may be slightly different from the latest BIOS and should be for reference only. You could also refer to the **HELP** information panel for BIOS item description.*
- *The BIOS screens, options and settings will vary depending on your system.*

Entering BIOS Setup

Press **Delete** key, when the **Press DEL key to enter Setup Menu, F11 to enter Boot Menu** message appears on the screen during the boot process.

Function key

F1:	General Help list
F2:	Add/ Remove a favorite item
F3:	Enter Favorites menu
F4:	Enter CPU Specifications menu
F5:	Enter Memory-Z menu
F6:	Load optimized defaults
F7:	Switch between Advanced mode and EZ mode
F8:	Load Overclocking Profile
F9:	Save Overclocking Profile
F10:	Save Change and Reset*
F12:	Take a screenshot and save it to USB flash drive (FAT/ FAT32 format only).
Ctrl+F:	Enter Search page

* When you press F10, a confirmation window appears and it provides the modification information. Select between Yes or No to confirm your choice.

BIOS User Guide

If you'd like to know more instructions on setting up the BIOS, please refer to https://download.msi.com/archive/mnu_exe/mb/Intel700BIOS.pdf

or scan the QR code to access.

Important

Functions may vary depending on the product you have.

Resetting BIOS

You might need to restore the default BIOS setting to solve certain problems. There are several ways to reset BIOS:

- Go to BIOS and press **F6** to load optimized defaults.
- Short the **Clear CMOS** jumper on the motherboard.
- Press the **Clear CMOS** button on the rear I/O panel.

Important

*Be sure the computer is off before clearing CMOS data. Please refer to the **Clear CMOS** jumper/ button section for resetting BIOS.*

Updating BIOS

Updating BIOS with M-FLASH

Before updating:

Please download the latest BIOS file that matches your motherboard model from MSI website. And then save the BIOS file into the USB flash drive.

Updating BIOS:

1. Switch to the target BIOS ROM by Multi-BIOS switch. Please skip this step if your motherboard doesn't has this switch.
2. Insert the USB flash drive that contains the update file into the USB port.
3. Please refer the following methods to enter flash mode.
   - Reboot and press **Ctrl + F5** key during POST and click on Yes to reboot the system.

   - Reboot and press **Del** key during POST to enter BIOS. Click the **M-FLASH** button and click on Yes to reboot the system.

4. Select a BIOS file to perform the BIOS update process.
5. When prompted click on **Yes** to start recovering BIOS.
6. After the flashing process is 100% completed, the system will reboot automatically.

Updating the BIOS with MSI Center

Before updating:

- Make sure the LAN driver is already installed and the internet connection is set properly.
- Please close all other application software before updating the BIOS.

To update BIOS:

1. Install and launch MSI Center and go to **Support** page.
2. Select **Live Update** and click on **Advance** button.
3. Select the BIOS file and click on **Install** button.
4. The installation reminder will appear, then click the Install button on it.
5. The system will automatically restart to update BIOS.
6. After the flashing process is 100% completed, the system will restart automatically.

Updating BIOS with Flash BIOS Button

1. Please download the latest BIOS file that matches your motherboard model from the MSI® website.
2. Rename the BIOS file to MSI.ROM, and save it to the root of the USB storage device.
3. Connect the power supply to **CPU_PWR1** and **ATX_PWR1**. (No need to install CPU and memory.)
4. Plug the USB storage device that contains the MSI.ROM file into the **Flash BIOS Port** on the rear I/O panel.
5. Press the **Flash BIOS Button** to flash BIOS, and the LED starts flashing.
6. The LED will be turned off when the process is completed.

Block Diagram

MAG Z790 TOMAHAWK MAX WIFI

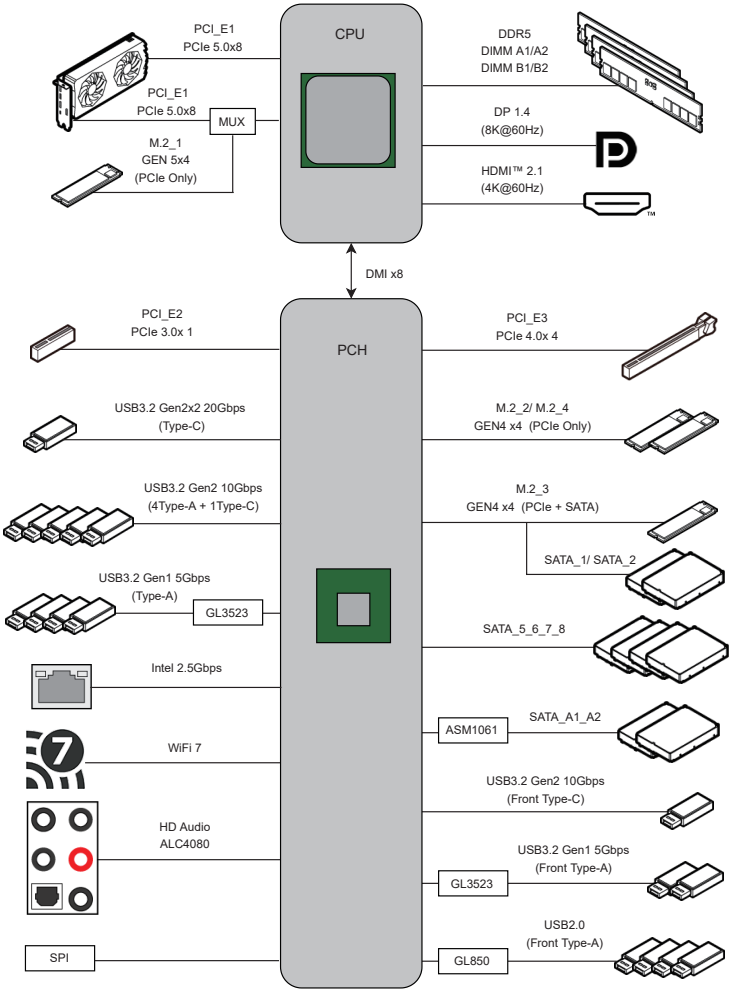

Regulatory Notices

FCC-B Radio Frequency Interference Statement

This equipment has been tested and found to comply with the limits for a Class B digital device, pursuant to part 15 of the FCC rules. These limits are designed to provide reasonable protection against harmful interference in a residential installation. This equipment generates, uses and radiates radio frequency energy, and, if not installed and used in accordance with the instructions, may cause harmful interference to radio communications. However, there is no guarantee that interference will not occur in a particular installation. If this equipment does cause harmful interference to radio or television reception, which can be determined by turning the equipment off and on, the user is encouraged to try to correct the interference by one or more of the following measures:

- Reorient or relocate the receiving antenna.
- Increase the separation between the equipment and receiver.
- Connect the equipment into an outlet on a circuit different from that to which the receiver is connected.

NOTE

- The changes or modifications not expressly approved by the party responsible for compliance could void the user's authority to operate the equipment.
- Shield interface cables and AC power cord, if any, must be used in order to comply with the emission limits.

FCC Conditions

This device complies with part 15 of the FCC Rules. Operation is subject to the following two conditions:

- This device may not cause harmful interference.
- This device must accept any interference received, including interference that may cause undesired operation.

MSI Computer Corp.

901 Canada Court, City of Industry, CA 91748, USA

(626)913-0828

www.msi.com

CE Conformity

Products bearing the CE marking comply with one or more of the following EU Directives as may be applicable:

- RED 2014/53/EU
- Low Voltage Directive 2014/35/EU
- EMC Directive 2014/30/EU
- RoHS Directive 2011/65/EU
- ErP Directive 2009/125/EC

Compliance with these directives is assessed using applicable European Harmonized Standards.

The point of contact for regulatory matters is MSI-Europe: Eindhoven 5706 5692 ER Son.

Products with Radio Functionality (EMF)

This product incorporates a radio transmitting and receiving device. For computers in normal use, a separation distance of 20 cm ensures that radio frequency exposure levels comply with EU requirements. Products designed to be operated at closer proximities, such as tablet computers, comply with applicable EU requirements in typical operating positions. Products can be operated without maintaining a separation distance unless otherwise indicated in instructions specific to the product.

Restrictions for Products with Radio Functionality

CAUTION: IEEE 802.11x wireless LAN with 5.15~5.35 GHz frequency band is restricted for indoor use only in all European Union member states, EFTA (Iceland, Norway, Liechtenstein), and most other European countries (e.g., Switzerland, Turkey, Republic of Serbia). Using this WLAN application outdoors might lead to interference issues with existing radio services.

Radio frequency bands and maximum power levels

- Features: Wi-Fi 7, BT
- Frequency Range: 2.4 GHz: 2400~2485MHz; 5 GHz: 5150~5350MHz, 5470~5725MHz, 5725~5850MHz; 6 GHz: 5955~6415MHz
- Max Power Level: 2.4 GHz: 20dBm; 5 GHz: 23dBm; 6 GHz: 23dBm

Wireless Radio Use

This device is restricted to indoor use when operating in the 2.4GHz, 5GHz, 6GHz frequency band.

Cet appareil doit être utilisé à l'intérieur.

당해 무선설비는 운용중 전파혼신 가능성이 있음.

この製品は、周波数帯域 2.4GHz, 5GHz, 6GHz で動作しているときは、屋内においてのみ使用可能です。

NCC無線設備警告聲明

工作頻率2.4GHz, 5GHz, 6GHz該頻段限於室內使用。

經型式認證合格之低功率射頻電機，非經許可，公司、商號或使用者均不得擅自變更頻率、加大功率或變更原設計之特性及功能。

低功率射頻電機之使用不得影響飛航安全及干擾合法通信；經發現有干擾現象時，應立即停用，並改善至無干擾時方得繼續使用。前項合法通信，指依電信法規定作業之無線電通信。低功率射頻電機須忍受合法通信或工業、科學及醫療用電波輻射性電機設備之干擾。

Compliance Statement of Innovation, Science and Economic Development Canada (ISED)

This device complies with with Innovation, Science and Economic Development Canada's licence-exempt RSS(s). Operation is subject to the following two conditions: (1) this device may not cause interference, and (2) this device must accept any interference, including interference that may cause undesired operation of the device.

Operation in the band 5150-5250 MHz is only for indoor use to reduce the potential for harmful interference to co-channel mobile satellite systems.

CAN ICES-003(B)/NMB-003(B)

Australia and New Zealand notice

This equipment incorporates a radio transmitting and receiving device. In normal use, a separation distance of 20 cm ensures that radio frequency exposure levels comply with the Australian and New Zealand Standards.

クラスB情報技術装置

この装置は、クラスB情報技術装置です。この装置は、家庭環境で使用することを目的としていますが、この装置がラジオやテレビジョン受信機に近接して使用されると、受信障害を引き起こすことがあります。取扱説明書に従って正しい取り扱いをして下さい。

VCCI-B

KC인증서

R-R-MSI-20-7E25

상호: (주)엠에스아이코리아
제품명: 메인보드
모델명: 20-7E25
제조년월: 2023년
제조자 및 제조국가: MSI/중국

Battery Information

European Union:

Batteries, battery packs, and accumulators should not be disposed of as unsorted household waste. Please use the public collection system to return, recycle, or treat them in compliance with the local regulations.

BSMI:

廢電池請回收
For better environmental protection, waste batteries should be collected separately for recycling or special disposal.

California, USA:

The button cell battery may contain perchlorate material and requires special handling when recycled or disposed of in California.
For further information please visit:
http://www.dtsc.ca.gov/hazardouswaste/perchlorate/

CAUTION: There is a risk of explosion, if battery is incorrectly replaced. Replace only with the same or equivalent type recommended by the manufacturer.

Chemical Substances Information

In compliance with chemical substances regulations, such as the EU REACH Regulation (Regulation EC No. 1907/2006 of the European Parliament and the Council), MSI provides the information of chemical substances in products at:

https://csr.msi.com/global/index

Environmental Policy

- The product has been designed to enable proper reuse of parts and recycling and should not be thrown away at its end of life.
- Users should contact the local authorized point of collection for recycling and disposing of their end-of-life products.
- Visit the MSI website and locate a nearby distributor for further recycling information.
- Users may also reach us at gpcontdev@msi.com for information regarding proper Disposal, Take-back, Recycling, and Disassembly of MSI products.

WEEE (Waste Electrical and Electronic Equipment) Statement

ENGLISH

To protect the global environment and as an environmentalist, MSI must remind you that...

Under the European Union ("EU") Directive on Waste Electrical and Electronic Equipment, Directive 2002/96/EC, which takes effect on August 13, 2005, products of "electrical and electronic equipment" cannot be

discarded as municipal wastes anymore, and manufacturers of covered electronic equipment will be obligated to take back such products at the end of their useful life. MSI will comply with the product take back requirements at the end of life of MSI-branded products that are sold into the EU. You can return these products to local collection points.

DEUTSCH

Hinweis von MSI zur Erhaltung und Schutz unserer Umwelt

Gemäß der Richtlinie 2002/96/EG über Elektro- und Elektronik-Altgeräte dürfen Elektro- und Elektronik-Altgeräte nicht mehr als kommunale Abfälle entsorgt werden. MSI hat europaweit verschiedene Sammel- und Recyclingunternehmen beauftragt, die in die Europäische Union in Verkehr gebrachten Produkte, am Ende seines Lebenszyklus zurückzunehmen. Bitte entsorgen Sie dieses Produkt zum gegebenen Zeitpunkt ausschliesslich an einer lokalen Altgerätesammelstelle in Ihrer Nähe.

FRANÇAIS

En tant qu'écologiste et afin de protéger l'environnement, MSI tient à rappeler ceci...

Au sujet de la directive européenne (EU) relative aux déchets des équipement électriques et électroniques, directive 2002/96/EC, prenant effet le 13 août 2005, que les produits électriques et électroniques ne peuvent être déposés dans les décharges ou tout simplement mis à la poubelle. Les fabricants de ces équipements seront obligés de récupérer certains produits en fin de vie. MSI prendra en compte cette exigence relative au retour des produits en fin de vie au sein de la communauté européenne. Par conséquent vous pouvez retourner localement ces matériels dans les points de collecte.

РУССКИЙ

Компания MSI предпринимает активные действия по защите окружающей среды, поэтому напоминаем вам, что....

В соответствии с директивой Европейского Союза (ЕС) по предотвращению загрязнения окружающей среды использованным электрическим и электронным оборудованием (директива WEEE 2002/96/EC), вступающей в силу 13 августа 2005 года, изделия, относящиеся к электрическому и электронному оборудованию, не могут рассматриваться как бытовой мусор, поэтому производители вышеперечисленного электронного оборудования обязаны принимать его для переработки по окончании срока службы. MSI обязуется соблюдать требования по приему продукции, проданной под маркой MSI на территории ЕС, в переработку по окончании срока службы. Вы можете вернуть эти изделия в специализированные пункты приема.

ESPAÑOL

MSI como empresa comprometida con la protección del medio ambiente, recomienda:

Bajo la directiva 2002/96/EC de la Unión Europea en materia de desechos y/o equipos electrónicos, con fecha de rigor desde el 13 de agosto de 2005, los productos clasificados como "eléctricos y equipos electrónicos" no pueden ser depositados en los contenedores habituales de su municipio, los fabricantes de equipos electrónicos, están obligados a hacerse cargo de dichos productos al termino de su período de vida. MSI estará comprometido con los términos de recogida de sus productos vendidos en

la Unión Europea al final de su periodo de vida. Usted debe depositar estos productos en el punto limpio establecido por el ayuntamiento de su localidad o entregar a una empresa autorizada para la recogida de estos residuos.

NEDERLANDS

Om het milieu te beschermen, wil MSI u eraan herinneren dat....

De richtlijn van de Europese Unie (EU) met betrekking tot Vervuiling van Electrische en Electronische producten (2002/96/EC), die op 13 Augustus 2005 in zal gaan kunnen niet meer beschouwd worden als vervuiling. Fabrikanten van dit soort producten worden verplicht om producten retour te nemen aan het eind van hun levenscyclus. MSI zal overeenkomstig de richtlijn handelen voor de producten die de merknaam MSI dragen en verkocht zijn in de EU. Deze goederen kunnen geretourneerd worden op lokale inzamelingspunten.

SRPSKI

Da bi zaštitili prirodnu sredinu, i kao preduzeće koje vodi računa o okolini i prirodnoj sredini, MSI mora da vas podesti da...
Po Direktivi Evropske unije ("EU") o odbačenoj ekektronskoj i električnoj opremi, Direktiva 2002/96/EC, koja stupa na snagu od 13. Avgusta 2005, proizvodi koji spadaju pod "elektronsku i električnu opremu" ne mogu više biti odbačeni kao običan otpad i proizvođači ove opreme biće prinuđeni da uzmu natrag ove proizvode na kraju njihovog uobičajenog veka trajanja. MSI će poštovati zahtev o preuzimanju ovakvih proizvoda kojima je istekao vek trajanja, koji imaju MSI oznaku i koji su prodati u EU. Ove proizvode možete vratiti na lokalnim mestima za prikupljanje.

POLSKI

Aby chronić nasze środowisko naturalne oraz jako firma dbająca o ekologię, MSI przypomina, że...Zgodnie z Dyrektywą Unii Europejskiej ("UE") dotyczącą odpadów produktów elektrycznych i elektronicznych (Dyrektywa 2002/96/EC), która wchodzi w życie 13 sierpnia 2005, tzw. "produkty oraz wyposażenie elektryczne i elektroniczne " nie mogą być traktowane jako śmieci komunalne, tak więc producenci tych produktów będą zobowiązani do odbierania ich w momencie gdy produkt jest wycofywany z użycia. MSI wypełni wymagania UE, przyjmując produkty (sprzedawane na terenie Unii Europejskiej) wycofywane z użycia. Produkty MSI będzie można zwracać w wyznaczonych punktach zbiorczych.

TÜRKÇE

Çevreci özelliğiyle bilinen MSI dünyada çevreyi korumak için hatırlatır:
Avrupa Birliği (AB) Kararnamesi Elektrik ve Elektronik Malzeme Atığı, 2002/96/EC Kararnamesi altında 13 Ağustos 2005 tarihinden itibaren geçerli olmak üzere, elektrikli ve elektronik malzemeler diğer atıklar gibi çöpe atılamayacak ve bu elektonik cihazların üreticileri, cihazların kullanım süreleri bittikten sonra ürünleri geri toplamakla yükümlü olacaktır. Avrupa Birliği'ne satılan MSI markalı ürünlerin kullanım süreleri bittiğinde MSI ürünlerin geri alınması isteği ile işbirliği içerisinde olacaktır. Ürünlerinizi yerel toplama noktalarına bırakabilirsiniz.

ČESKY

Záleží nám na ochraně životního prostředí - společnost MSI upozorňuje...

Podle směrnice Evropské unie ("EU") o likvidaci elektrických a elektronických výrobků 2002/96/EC platné od 13. srpna 2005 je zakázáno likvidovat "elektrické a elektronické

výrobky" v běžném komunálním odpadu a výrobci elektronických výrobků, na které se tato směrnice vztahuje, budou povinni odebírat takové výrobky zpět po skončení jejich životnosti. Společnost MSI splní požadavky na odebírání výrobků značky MSI, prodávaných v zemích EU, po skončení jejich životnosti. Tyto výrobky můžete odevzdat v místních sběrnách.

MAGYAR

Annak érdekében, hogy környezetünket megvédjük, illetve környezetvédőként fellépve az MSI emlékezteti Önt, hogy ...

Az Európai Unió („EU") 2005. augusztus 13-án hatályba lépő, az elektromos és elektronikus berendezések hulladékairól szóló 2002/96/EK irányelve szerint az elektromos és elektronikus berendezések többé nem kezelhetőek lakossági hulladékként, és az ilyen elektronikus berendezések gyártói kötelessé válnak az ilyen termékek visszavételére azok hasznos élettartama végén. Az MSI betartja a termékvisszavétellel kapcsolatos követelményeket az MSI márkanév alatt az EU-n belül értékesített termékek esetében, azok élettartamának végén. Az ilyen termékeket a legközelebbi gyűjtőhelyre viheti.

ITALIANO

Per proteggere l'ambiente, MSI, da sempre amica della natura, ti ricorda che....

In base alla Direttiva dell'Unione Europea (EU) sullo Smaltimento dei Materiali Elettrici ed Elettronici, Direttiva 2002/96/EC in vigore dal 13 Agosto 2005, prodotti appartenenti alla categoria dei Materiali Elettrici ed Elettronici non possono più essere eliminati come rifiuti municipali: i produttori di detti materiali saranno obbligati a ritirare ogni prodotto alla fine del suo ciclo di vita. MSI si adeguerà a tale Direttiva ritirando tutti i prodotti marchiati MSI che sono stati venduti all'interno dell'Unione Europea alla fine del loro ciclo di vita. È possibile portare i prodotti nel più vicino punto di raccolta

日本JIS C 0950材質宣言

日本工業規格JIS C 0950により、2006年7月1日以降に販売される特定分野の電気および電子機器について、製造者による含有物質の表示が義務付けられます。

https://csr.msi.com/tw/Japan-JIS-C-0950-Material-Declarations

India RoHS

This product complies with the "India E-waste (Management and Handling) Rule 2011" and prohibits use of lead, mercury, hexavalent chromium, polybrominated biphenyls or polybrominated diphenyl ethers in concentrations exceeding 0.1 weight % and 0.01 weight % for cadmium, except for the exemptions set in Schedule 2 of the Rule.

Türkiye EEE yönetmeliği

Türkiye Cumhuriyeti: EEE Yönetmeliğine Uygundur

Україна обмеження на наявність небезпечних речовин

Обладнання відповідає вимогам Технічного регламенту щодо обмеження використання деяких небезпечних речовин в електричному та електронному обладнані, затвердженого постановою Кабінету Міністрів України від 3 грудня 2008 № 1057.

Việt Nam RoHS

Kể từ ngày 01/12/2012, tất cả các sản phẩm do công ty MSI sản xuất tuân thủ Thông tư số 30/2011/TT-BCT quy định tạm thời về giới hạn hàm lượng cho phép của một số hóa chất độc hại có trong các sản phẩm điện, điện tử"

MS-7E25主板产品中有害物质的名称及含量

部件名称	有害物质					
	铅 (Pb)	汞 (Hg)	镉 (Cd)	六价铬 (Cr(VI))	多溴联苯 (PBB)	多溴二苯醚 (PBDE)
印刷电路板组件*	╳	○	○	○	○	○
纽扣电池	○	○	○	○	○	○
外部信号连接头	╳	○	○	○	○	○
其他 (例: 线材等)	╳	○	○	○	○	○

本表格依据 SJ/T 11364 的规定编制。

○: 表示该有害物质在该部件所有均质材料中的含量均在 GB/T 26572 规定的限量要求以下。

╳: 表示该有害物质至少在该部件的某一均质材料中的含量超出 GB/T 26572 规定的限量要求，但所有部件都符合欧盟RoHS要求。

* 印刷电路板组件: 包括印刷电路板及其构成的零部件。

■ 上述有毒有害物质或元素清单会依型号之部件差异而有所增减。

■ 产品部件本体上如有环保使用期限标识，以本体标识为主。

限用物質含有情況標示聲明書

設備名稱：電腦主機板　　型號(型式)：MS-7E25

單元	限用物質及其化學符號					
	鉛 (Pb)	汞 (Hg)	鎘 (Cd)	六價鉻 (Cr^{+6})	多溴聯苯 (PBB)	多溴二苯醚 (PBDE)
電路板	○	○	○	○	○	○
電子元件	—	○	○	○	○	○
金屬機構件	—	○	○	○	○	○
塑膠機構件	○	○	○	○	○	○

備考1. "超出0.1 wt %" 及 "超出0.01 wt %" 係指限用物質之百分比含量超出百分比含量基準值。

備考2. "○" 係指該項限用物質之百分比含量未超出百分比含量基準值。

備考3. "—" 係指該項限用物質為排除項目。

Copyright and Trademarks Notice

Copyright © Micro-Star Int'l Co., Ltd. All rights reserved. The MSI logo used is a registered trademark of Micro-Star Int'l Co., Ltd. All other marks and names mentioned may be trademarks of their respective owners. No warranty as to accuracy or completeness is expressed or implied. MSI reserves the right to make changes to this document without prior notice.

The terms HDMI™, HDMI™ High-Definition Multimedia Interface, HDMI™ Trade dress and the HDMI™ Logos are trademarks or registered trademarks of HDMI™ Licensing Administrator, Inc.

Technical Support

If a problem arises with your system and no solution can be obtained from the user guide, please contact your place of purchase or local distributor. Alternatively, please try the following help resources for further guidance.

- Visit the MSI website for technical guide, BIOS updates, driver updates, and other information: http://www.msi.com
- Register your product at: http://register.msi.com

Revision History

- Version 2.0, 2023/08, First release.
- Version 2.1, 2023/09, Update memory spec.
- Version 2.2, 2023/11, Update CPU spec.