TUF GAMING Z790-PRO WIFI

Motherboard

E22357
First Edition
September 2023

Copyright © 2023 ASUSTeK COMPUTER INC. All Rights Reserved.

No part of this manual, including the products and software described in it, may be reproduced, transmitted, transcribed, stored in a retrieval system, or translated into any language in any form or by any means, except documentation kept by the purchaser for backup purposes, without the express written permission of ASUSTeK COMPUTER INC. (“ASUS”).

Product warranty or service will not be extended if: (1) the product is repaired, modified or altered, unless such repair, modification of alteration is authorized in writing by ASUS; or (2) the serial number of the product is defaced or missing.

ASUS PROVIDES THIS MANUAL “AS IS” WITHOUT WARRANTY OF ANY KIND, EITHER EXPRESS OR IMPLIED, INCLUDING BUT NOT LIMITED TO THE IMPLIED WARRANTIES OR CONDITIONS OF MERCHANTABILITY OR FITNESS FOR A PARTICULAR PURPOSE. IN NO EVENT SHALL ASUS, ITS DIRECTORS, OFFICERS, EMPLOYEES OR AGENTS BE LIABLE FOR ANY INDIRECT, SPECIAL, INCIDENTAL, OR CONSEQUENTIAL DAMAGES (INCLUDING DAMAGES FOR LOSS OF PROFITS, LOSS OF BUSINESS, LOSS OF USE OR DATA, INTERRUPTION OF BUSINESS AND THE LIKE), EVEN IF ASUS HAS BEEN ADVISED OF THE POSSIBILITY OF SUCH DAMAGES ARISING FROM ANY DEFECT OR ERROR IN THIS MANUAL OR PRODUCT.

SPECIFICATIONS AND INFORMATION CONTAINED IN THIS MANUAL ARE FURNISHED FOR INFORMATIONAL USE ONLY, AND ARE SUBJECT TO CHANGE AT ANY TIME WITHOUT NOTICE, AND SHOULD NOT BE CONSTRUED AS A COMMITMENT BY ASUS. ASUS ASSUMES NO RESPONSIBILITY OR LIABILITY FOR ANY ERRORS OR INACCURACIES THAT MAY APPEAR IN THIS MANUAL, INCLUDING THE PRODUCTS AND SOFTWARE DESCRIBED IN IT.

Products and corporate names appearing in this manual may or may not be registered trademarks or copyrights of their respective companies, and are used only for identification or explanation and to the owners’ benefit, without intent to infringe.

Contents

Safety information iv
About this guide v
TUF GAMING Z790-PRO WIFI specifications summary viii
Package contents xii

Chapter 1: Product Introduction

1.1 Before you proceed 1-1
1.2 Motherboard layout 1-2
1.3 Motherboard rear and audio connections 1-23
1.3.1 Rear I/O connection 1-23
1.3.2 Audio I/O connections 1-25

Chapter 2: Basic Setup

2.1 CPU installation 2-1
2.2 DIMM installation 2-3
2.3 M.2 installation 2-4
2.4 Motherboard installation 2-8
2.5 Expansion card installation 2-9
2.5.1 Thunderbolt™ series card installation 2-9
2.6 ASUS WiFi Q-Antenna installation (on selected models) 2-10
2.7 Starting up for the first time 2-11
2.8 Turning off the computer 2-11

Chapter 3: BIOS and RAID Support

3.1 Knowing UEFI BIOS 3-1
3.2 ASUS EZ Flash 3 3-2
3.3 ASUS CrashFree BIOS 3 3-3
3.4 RAID configurations 3-4

Appendix

General Notices A-1
Notices for Wi-Fi model A-4
Warranty A-12
ASUS contact information A-14
Service and Support A-14

Safety information

Electrical safety

- To prevent electrical shock hazard, disconnect the power cable from the electrical outlet before relocating the system.
- When adding or removing devices to or from the system, ensure that the power cables for the devices are unplugged before the signal cables are connected. If possible, disconnect all power cables from the existing system before you add a device.
- Before connecting or removing signal cables from the motherboard, ensure that all power cables are unplugged.
- Seek professional assistance before using an adapter or extension cord. These devices could interrupt the grounding circuit.
- Ensure that your power supply is set to the correct voltage in your area. If you are not sure about the voltage of the electrical outlet you are using, contact your local power company.
- If the power supply is broken, do not try to fix it by yourself. Contact a qualified service technician or your retailer.

Operation safety

- Before installing the motherboard and adding devices on it, carefully read all the manuals that came with the package.
- Before using the product, ensure all cables are correctly connected and the power cables are not damaged. If you detect any damage, contact your dealer immediately.
- To avoid short circuits, keep paper clips, screws, and staples away from connectors, slots, sockets and circuitry.
- Avoid dust, humidity, and temperature extremes. Do not place the product in any area where it may become wet.
- Place the product on a stable surface.
- If you encounter technical problems with the product, contact a qualified service technician or your retailer.
- Your motherboard should only be used in environments with ambient temperatures between 10°C and 35°C.

Button/Coin Batteries Safety Information

WARNING

KEEP OUT OF REACH OF CHILDREN
Swallowing can lead to chemical burns, perforation of soft tissue, and death. Severe burns can occur within 2 hours of ingestion. Seek medical attention immediately.

About this guide

This user guide contains the information you need when installing and configuring the motherboard.

How this guide is organized

This guide contains the following parts:

- **Chapter 1: Product Introduction**

  This chapter describes the features of the motherboard and includes descriptions for each part of the motherboard.

- **Chapter 2: Basic Setup**

  This chapter lists the basic setup procedures for setting up your motherboard.

- **Chapter 3: BIOS and RAID Support**

  This chapter tells how to boot into the BIOS, upgrade BIOS using the EZ Flash Utility and support on RAID.

Where to find more information

Refer to the following sources for additional information and for product and software updates.

1. **ASUS website**

   The ASUS website (www.asus.com) provides updated information on ASUS hardware and software products.

2. **Optional documentation**

   Your product package may include optional documentation, such as warranty flyers, that may have been added by your dealer. These documents are not part of the standard package.

3. **MyASUS**

   MyASUS offers a variety of support features such as helping to troubleshoot issues, optimizing product performance, integrating ASUS software, and recovery drive creation. Please visit https://www.asus.com/support for installation guide and FAQ.

MyASUS is only available on selected models, please check your motherboard's specifications summary to see if your motherboard supports MyASUS.

4. **Motherboard Installation Guide**

Please visit https://www.asus.com/support for more information on the Motherboard Installation Guide.

5. **Driver and Utilities FAQ**

Please visit https://www.asus.com/support for more information on downloading and installing drivers and utilities for your motherboard.

6. **RAID Configuration Guide**

Please visit https://www.asus.com/support for more information on the RAID Configuration Guide.

Conventions used in this guide

To ensure that you perform certain tasks properly, take note of the following symbols used throughout this user guide.

CAUTION: Information to prevent damage to the components and injuries to yourself when trying to complete a task.

IMPORTANT: Instructions that you MUST follow to complete a task.

NOTE: Tips and additional information to help you complete a task.

TUF GAMING Z790-PRO WIFI specifications summary

CPU	Intel® Socket LGA1700 for Intel® Core™ 14th & 13th Gen Processors, Intel® Core™ 12th Gen, Pentium® Gold and Celeron® Processors* Supports Intel® Turbo Boost Technology 2.0 and Intel® Turbo Boost Max Technology 3.0** *** Refer to www.asus.com for CPU support list.** **** Intel® Turbo Boost Max Technology 3.0 support depends on the CPU types.**
Chipset	Intel® Z790 Chipset
Memory	4 x DIMM slots, max. 192GB, DDR5, Non-ECC, Un-buffered Memory* Dual channel memory architecture Supports Intel® Extreme Memory Profile (XMP) memory module ASUS Enhanced Memory Profile II (AEMP II) *** Supported memory types, data rate (speed), and number of DRAM modules vary depending on the CPU and memory configuration, for more information please refer to CPU/Memory Support list under the Support tab of product information site or visit https://www.asus.com/support/.** *** Non-ECC, un-buffered DDR5 memory supports On-Die ECC function.**
Graphics	1 x DisplayPort** 1 x HDMI™ port*** *** Graphics specifications may vary between CPU types. Please refer to www.intel.com for any updates.** **** Supports max. 4K@60Hz as specified in DisplayPort 1.4** ***** Supports 4K@60Hz as specified in HDMI 2.1.**
Expansion Slots	**Intel® Core™ Processors (14th & 13th & 12th Gen)*** 1 x PCIe 5.0 x16 slot **Intel® Z790 Chipset** 1 x PCIe 4.0 x16 slot (supports x4 mode) 1 x PCIe 4.0 x4 slot 1 x PCIe 3.0 x16 slot (supports x1 mode) 1 x PCIe 3.0 x1 slot *** Please check the PCIe bifurcation table on the support site (https://www.asus.com/support/FAQ/1037507/).** ** To ensure compatibility of the device installed, please refer to https://www.asus.com/support/ for the list of supported peripherals.
Storage	**Supports 4 x M.2 slots and 4 x SATA 6Gb/s ports*** **Intel® Core™ Processors (14th & 13th & 12th Gen)*** M.2_1 slot (Key M), type 2242/2260/2280/22110 (supports PCIe 4.0 x4 mode) **Intel® Z790 Chipset** M.2_2 slot (Key M), type 2242/2260/2280 (supports PCIe 4.0 x4 mode) M.2_3 slot (Key M), type 2242/2260/2280/22110 (supports PCIe 4.0 x4 mode) M.2_4 slot (Key M), type 2242/2260/2280 (supports PCIe 4.0 x4 & SATA modes) 4 x SATA 6Gb/s ports *** Intel® Rapid Storage Technology supports PCIe RAID 0/1/5/10, SATA RAID 0/1/5/10.**

(continued on the next page)

TUF GAMING Z790-PRO WIFI specifications summary

Ethernet	1 x Intel® 2.5Gb Ethernet TUF LANGuard
Wireless & Bluetooth®	**Wi-Fi 6E** 2x2 Wi-Fi 6E (802.11ax) Supports 2.4/5/6GHz frequency band* Bluetooth® v5.3** *** WiFi 6GHz regulatory may vary between countries.** **** The Bluetooth version may vary, please refer to the Wi-Fi module manufacturer's website for the latest specifications.**
USB	**Rear USB (Total 8 ports)** 1 x USB 20Gbps port (1 x USB Type-C®) 3 x USB 10Gbps ports (2 x Type-A + 1 x USB Type-C®) 4 x USB 5Gbps ports (4 x Type-A) **Front USB (Total 7 ports)** 1 x USB 20Gbps connector (supports USB Type-C® with up to 30W PD Fast-charge) 1 x USB 5Gbps header supports 2 additional USB 5Gbps ports 2 x USB 2.0 headers support 4 additional USB 2.0 ports
Audio	**Realtek S1220A 7.1 Surround Sound High Definition Audio CODEC*** - Impedance sense for front and rear headphone outputs - Internal audio Amplifier to enhance the highest quality sound for headphone and speakers - Supports: Jack-detection, Multi-streaming, Front Panel Jack-retasking - High quality 120 dB SNR stereo playback output and 113 dB SNR recording input (Line-in) - Supports up to 32-Bit/192 kHz playback* **Audio Features** - Audio Shielding - Rear optical S/PDIF out port - Premium audio capacitors - Dedicated audio PCB layers - Audio Cover - Unique de-pop circuit *** Due to limitations in HDA bandwidth, 32-Bit/192 kHz is not supported for 7.1 Surround Sound audio.**
Back Panel I/O Ports	1 x USB 20Gbps port (1 x USB Type-C®) 3 x USB 10Gbps ports (2 x Type-A + 1 x USB Type-C®) 4 x USB 5Gbps ports (4 x Type-A) 1 x DisplayPort 1 x HDMI™ port 1 x Wi-Fi module 1 x Intel® 2.5Gb Ethernet port 5 x Audio jacks 1 x Optical S/PDIF out port

(continued on the next page)

TUF GAMING Z790-PRO WIFI specifications summary

Internal I/O Connectors	**Fan and Cooling Related** 1 x 4-pin CPU Fan header 1 x 4-pin CPU OPT Fan header 1 x 4-pin AIO Pump header 4 x 4-pin Chassis Fan headers **Power Related** 1 x 24-pin main power connector 2 x 8-pin +12V power connectors **Storage Related** 4 x M.2 slots (Key M) 4 x SATA 6Gb/s ports **USB** 1 x USB 20Gbps connector (supports USB Type-C®) 1 x USB 5Gbps header supports 2 additional USB 5Gbps ports 2 x USB 2.0 headers support 4 additional USB 2.0 ports **Miscellaneous** 3 x Addressable Gen 2 headers 1 x Aura RGB header 1 x Clear CMOS header 1 x COM port header 1 x Front panel audio header (F_AUDIO) 1 x 20-3 pin system panel header with chassis intrusion function 1 x Thunderbolt™ (USB4®) header
Special Features	**ASUS TUF PROTECTION** - DIGI+ VRM (- Digital power design with DrMOS) - ESD Guards - TUF LANGuard - Overvoltage protection - SafeSlot - Stainless-steel back I/O **ASUS Q-Design** - M.2 Q-Latch - PCIe Slot Q-Release - Q-Antenna - Q-DIMM - Q-LED (CPU [red], DRAM [yellow], VGA [white], Boot Device [yellow green]) - Q-Slot **ASUS Thermal Solution** - M.2 heatsink - VRM heatsink design **ASUS EZ DIY** - CPU Socket lever protector - ProCool - Pre-mounted I/O shield

(continued on the next page)

TUF GAMING Z790-PRO WIFI specifications summary

Special Features	- SafeDIMM **Aura Sync** - Aura RGB header - Addressable Gen 2 headers **Front Panel USB 20Gbps with PD Fast Charge Support** - Support: up to 30W fast charging and USB Wattage Watcher - Output: 5V/9V max. 3A, 12V max 2.5A - Compatible with PD3.0
Software Features	**ASUS Exclusive Software** Armoury Crate - Aura Creator - Aura Sync - Fan Xpert 4 (with AI Cooling II) - Power Saving - Two-Way AI Noise Cancelation AI Suite 3 - Easy Optimization with AI Overclocking - TPU - DIGI+ VRM - Turbo app - PC Cleaner MyAsus USB Wattage Watcher TUF GAMING CPU-Z DTS Audio Processing Norton 360 for Gamers (60 Days Free Trial) WinRAR (40 Days Free Trial) **UEFI BIOS** AI Overclocking Guide ASUS EZ DIY - ASUS CrashFree BIOS 3 - ASUS EZ Flash 3 - ASUS UEFI BIOS EZ Mode - ASUS MyHotkey
BIOS	192 (128+64) Mb Flash ROM, UEFI AMI BIOS
BIOS CAP Filename	AX211NGW: A5475.CAP
Manageability	WOL by PME, PXE
Operating System	Windows® 11, Windows® 10 64-bit
Form Factor	ATX Form Factor 12 inch x 9.6 inch (30.5 cm x 24.4 cm)

Specifications are subject to change without notice. Please refer to the ASUS website for the latest specifications.

Package contents

Check your motherboard package for the following items.

Motherboard	1 x TUF GAMING Z790-PRO WIFI motherboard
Cables	2 x SATA 6Gb/s cables
Miscellaneous	1 x ASUS WiFi Q-Antenna 1 x TUF GAMING sticker 2 x M.2 rubber packages 1 x Screw package for M.2 SSD
Documentation	1 x TUF certification card 1 x Quick start guide

- If any of the above items is damaged or missing, contact your retailer.
- Items not listed in the Package contents list above are purchased separately and do not come bundled with your motherboard package.

Product Introduction

1

1.1 Before you proceed

Take note of the following precautions before you install motherboard components or change any motherboard settings.

- Unplug the power cord from the wall socket before touching any component.
- Before handling components, use a grounded wrist strap or touch a safely grounded object or a metal object, such as the power supply case, to avoid damaging them due to static electricity.
- Hold components by the edges to avoid touching the ICs on them.
- Whenever you uninstall any component, place it on a grounded antistatic pad or in the bag that came with the component.
- Before you install or remove any component, ensure that the ATX power supply is switched off or the power cord is detached from the power supply. Failure to do so may cause severe damage to the motherboard, peripherals, or components.

- The pin definitions in this chapter are for reference only. The pin names depend on the location of the header/jumper/connector.
- The illustrations for this chapter are for reference only. The WiFi module is only available on selected models.

1.2 Motherboard layout

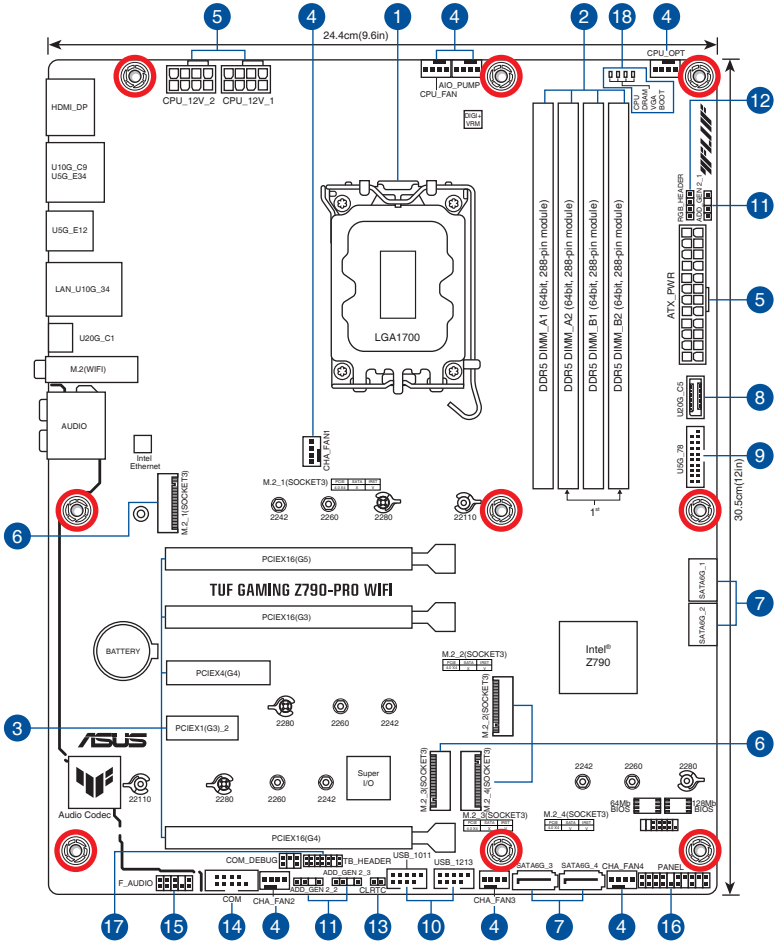

Layout contents	Page
1. CPU socket	1-4
2. DIMM slots	1-5
3. Expansion slots	1-6
4. Fan and Pump headers	1-9
5. Power connectors	1-10
6. M.2 slots	1-11
7. SATA 6Gb/s ports	1-12
8. USB 20Gbps Type-C® Front Panel connector	1-13
9. USB 5Gbps header	1-13
10. USB 2.0 headers	1-14
11. Addressable Gen 2 headers	1-15
12. Aura RGB header	1-16
13. Clear CMOS header	1-17
14. COM Port header	1-18
15. Front Panel Audio header	1-19
16. System Panel header	1-20
17. Thunderbolt™ (USB4®) header	1-21
18. Q-LEDs	1-22

1. CPU socket

The motherboard comes with a LGA1700 socket designed for Intel® Core™ 14th & 13th Gen Processors, Intel® Core™ 12th Gen, Pentium® Gold and Celeron® Processors.

LGA1700

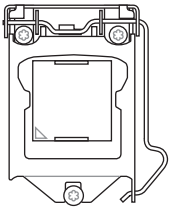

- Keep the cap after installing the motherboard. ASUS will process Return Merchandise Authorization (RMA) requests only if the motherboard comes with the cap on the CPU socket.
- The product warranty does not cover damage to the socket contacts resulting from incorrect CPU installation/removal, or misplacement/loss/incorrect removal of the PnP cap.

2. DIMM slots

The motherboard comes with Dual Inline Memory Modules (DIMM) slots designed for DDR5 (Double Data Rate 5) memory modules.

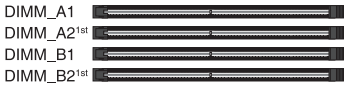

A DDR5 memory module is notched differently from a DDR, DDR2, DDR3, or DDR4 module. DO NOT install a DDR, DDR2, DDR3, or DDR4 memory module to the DDR5 slot.

Recommended memory configurations

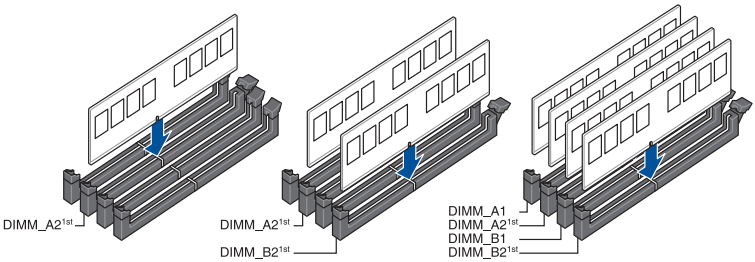

Memory configurations

You may install Non-ECC DDR5 DIMMs into the DIMM sockets.

- You may install varying memory sizes in the DIMM channels. The system maps the total size of the lower-sized channel for the dual-channel configuration. Any excess memory from the higher-sized channel is then mapped for single-channel operation.
- The default memory operation frequency is dependent on its Serial Presence Detect (SPD), which is the standard way of accessing information from a memory module. Under the default state, some memory modules for overclocking may operate at a lower frequency than the vendor-marked value.
- For system stability, use a more efficient memory cooling system to support a full memory load or overclocking condition.
- Always install the DIMMS with the same CAS Latency. For an optimum compatibility, we recommend that you install memory modules of the same version or data code (D/C) from the same vendor. Check with the vendor to get the correct memory modules.
- Visit the ASUS website for the latest QVL.

3. Expansion slots

Unplug the power cord before adding or removing expansion cards. Failure to do so may cause you physical injury and damage motherboard components.

To install a PCIe expansion card, please refer to the **Motherboard Installation Guide** on the ASUS support site.

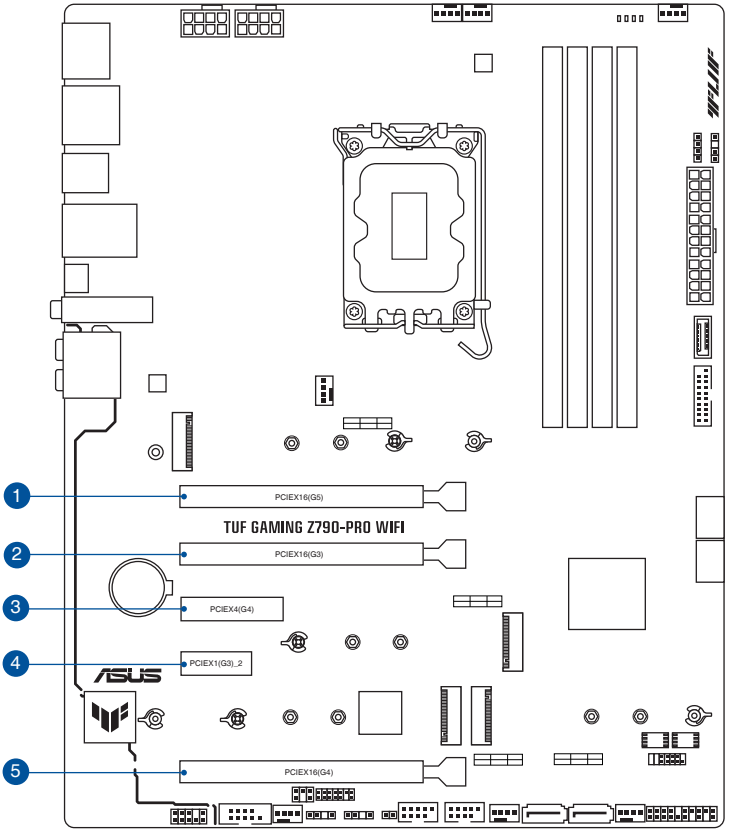

Please refer to the following tables for the recommended VGA configuration and Hyper M.2 configuration.

Recommended VGA configuration

Slot Description		Single VGA	Dual VGA
1	PCIEX16(G5)	x16	x16
5	PCIEX16(G4)	-	x4

Connect chassis fans to the chassis fan connectors when using multiple graphics cards for better thermal environment.

PCIe bifurcation & M.2 settings in PCIe x16 slots (from CPU)

Slot Description		Quantity of identifiable M.2 SSD (pcs)	
		Situation 1	Situation 2
1	PCIEX16(G5)	1 (x16)*	2 (x8+x8)**

* Install an M.2 SSD card to the M.2_1 or M.2_3 slot on the Hyper M.2 X16 series card.

** Install two M.2 SSD cards to the M.2_1 and M.2_3 slots on the Hyper M.2 X16 series card.

- Additional PCIe bifurcation and M.2 settings for RAID function are also supported when a Hyper M.2 x16 series card is installed.
- For full details on the PCIe bifurcation, you may visit the support site at https://www.asus.com/support/FAQ/1037507/.
- The Hyper M.2 x16 series card is sold separately.
- Adjust the PCIe bifurcation under BIOS settings.

Using the PCIe Slot Q-Release

The PCIEX16(G5) slot comes with a PCIe Slot Q-Release button allowing you to easily remove an expansion card installed to this PCIe slot, even when the expansion card may be blocking the PCIe push-latch, such as a graphics card.

To release an expansion card using the PCIe Slot Q-Release:

Press the PCIe Slot Q-Release button with one hand whilst slightly lifting the expansion card with the other hand. This should release the expansion card so that you can remove it with ease.

The illustration below is for reference only. The motherboard and PCIe Slot Q-Release button may differ between models, but the steps for using the PCIe Slot Q-Release remain the same.

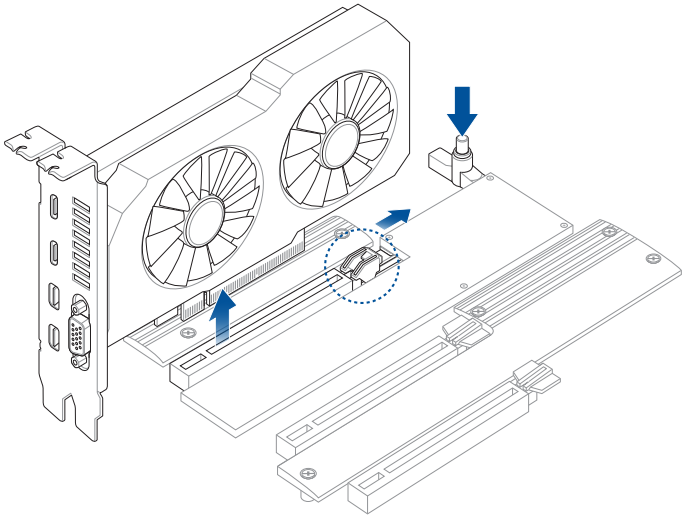

4. Fan and Pump headers

The Fan and Pump headers allow you to connect fans or pumps to cool the system.

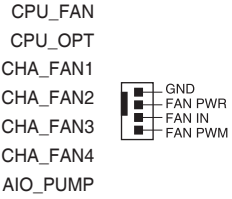

- DO NOT forget to connect the fan cables to the fan headers. Insufficient air flow inside the system may damage the motherboard components. These are not jumpers! Do not place jumper caps on the fan headers!
- Ensure the cable is fully inserted into the header.

For water cooling kits, connect the pump connector to the **AIO_PUMP** header.

- When connecting a single CPU fan, you may connect it to either the **CPU_FAN** or **CPU_OPT** header.
- When connecting two CPU fans, ensure to connect the fans to the **CPU_FAN** and the **CPU_OPT** header, and make sure both fans are the same brand and model.

Header	Max. Current	Max. Power	Default Speed	Shared Control
CPU_FAN	1A	12W	Q-Fan Controlled	A
CPU_OPT	1A	12W	Q-Fan Controlled	A
CHA_FAN1	1A	12W	Q-Fan Controlled	-
CHA_FAN2	1A	12W	Q-Fan Controlled	-
CHA_FAN3	1A	12W	Q-Fan Controlled	-
CHA_FAN4	1A	12W	Q-Fan Controlled	-
AIO_PUMP	1A	12W	Full Speed	-

5. Power connectors

These Power connectors allow you to connect your motherboard to a power supply. The power supply plugs are designed to fit in only one orientation. Find the proper orientation and push down firmly until the power supply plugs are fully inserted.

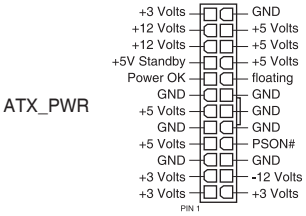

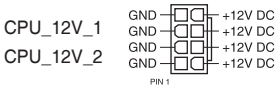

Ensure to connect all the 8-pin power plugs.

- We recommend that you use a PSU with a higher power output when configuring a system with more power-consuming devices. The system may become unstable or may not boot up if the power is inadequate.
- If you want to use two or more high-end PCI Express x16 cards, use a PSU with 900W~1200W power or above to ensure the system stability.

6. M.2 slots

The M.2 slots allow you to install M.2 devices such as M.2 SSD modules.

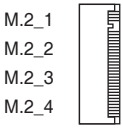

- **Intel® Core™ Processors (14th & 13th & 12th Gen):**
  - M.2_1 slot (Key M), type 2242/2260/2280/22110 (supports PCIe 4.0 x4 mode)
- **Intel® Z790 Chipset:**
  - M.2_2 slot (Key M), type 2242/2260/2280 (supports PCIe 4.0 x4 mode)
  - M.2_3 slot (Key M), type 2242/2260/2280/22110 (supports PCIe 4.0 x4 mode)
  - M.2_4 slot (Key M), type 2242/2260/2280 (supports PCIe 4.0 x4 and SATA mode)
- Intel® Rapid Storage Technology supports NVMe RAID 0/1/5, SATA RAID 0/1/5/10.

The M.2 SSD module is purchased separately.

7. SATA 6Gb/s ports

The SATA 6Gb/s ports allow you to connect SATA devices such as optical disc drives and hard disk drives via a SATA cable.

SATA6G_1
SATA6G_2
SATA6G_3
SATA6G_4

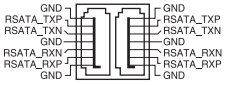

If you installed SATA storage devices, you can create a RAID 0, 1, 5, and 10 configuration with the Intel® Rapid Storage Technology through the onboard Intel® Z790 chipset.

Before creating a RAID set, refer to the **RAID Configuration Guide**. You can download the **RAID Configuration Guide** from the ASUS website.

8. USB 20Gbps Type-C® Front Panel connector

The USB 20Gbps Type-C® connector allows you to connect a USB 20Gbps Type-C® module for additional USB 20Gbps ports on the front panel. The USB 20Gbps Type-C® connector provides data transfer speeds of up to 20 Gb/s and PD 3.0 support for up to 30W fast charging technology.

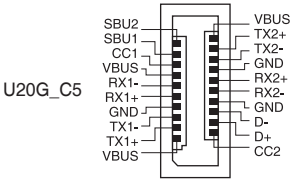

The USB 20Gbps Type-C® module is purchased separately.

9. USB 5Gbps header

The USB 5Gbps header allows you to connect a USB 5Gbps module for additional USB 5Gbps ports. The USB 5Gbps header provides data transfer speeds of up to 5 Gb/s.

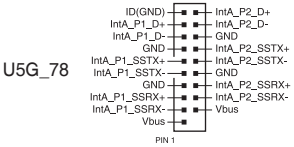

The USB 5Gbps module is purchased separately.

10. USB 2.0 headers

The USB 2.0 headers allow you to connect USB modules for additional USB 2.0 ports. The USB 2.0 headers provide data transfer speeds of up to 480 Mb/s.

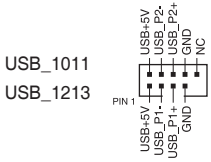

DO NOT connect a 1394 cable to the USB connectors. Doing so will damage the motherboard!

The USB 2.0 module is purchased separately.

11. Addressable Gen2 headers

The Addressable Gen2 headers allow you to connect individually addressable RGB WS2812B LED strips or WS2812B based LED strips.

ADD GEN2_1
ADD GEN2_2
ADD GEN2_3

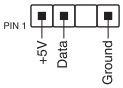

Before you install or remove any component, ensure that the power supply is switched off or the power cord is detached from the power supply. Failure to do so may cause severe damage to the motherboard, peripherals, or components.

- The Addressable Gen2 header supports WS2812B addressable RGB LED strips (5V/Data/Ground), with a maximum power rating of 3A (5V), and the addressable headers on this board can handle a combined maximum of 500 LEDs.
- Actual lighting and color will vary with LED strip.
- If your LED strip does not light up, check if the addressable RGB LED strip is connected in the correct orientation, and the 5V connector is aligned with the 5V header on the motherboard.
- The addressable RGB LED strip will only light up when the system is powered on.

12. Aura RGB header

The Aura RGB header allows you to connect RGB LED strips.

Before you install or remove any component, ensure that the power supply is switched off or the power cord is detached from the power supply. Failure to do so may cause severe damage to the motherboard, peripherals, or components.

- The Aura RGB header supports 5050 RGB multi-color LED strips (12V/G/R/B), with a maximum power rating of 3A (12V).
- Actual lighting and color will vary with LED strip.
- If your LED strip does not light up, check if the RGB LED extension cable and the RGB LED strip is connected in the correct orientation, and the 12V connector is aligned with the 12V header on the motherboard.
- The LED strip will only light up when the system is powered on.

13. Clear CMOS header

The Clear CMOS header allows you to clear the Real Time Clock (RTC) RAM in the CMOS, which contains the date, time, system passwords, and system setup parameters.

CLRTC

To erase the RTC RAM:

1. Turn OFF the computer and unplug the power cord.
2. Short-circuit pin 1-2 with a metal object or jumper cap for about 5-10 seconds.
3. Plug the power cord and turn ON the computer.
4. Hold down the <Del> key during the boot process and enter BIOS setup to re-enter data.

DO NOT short-circuit the pins except when clearing the RTC RAM. Short-circuiting or placing a jumper cap will cause system boot failure!

If the steps above do not help, remove the onboard button cell battery and short the two pins again to clear the CMOS RTC RAM data. After clearing the CMOS, reinstall the button cell battery.

14. COM Port header

The COM (Serial) Port header allows you to connect a COM port module. Connect the COM port module cable to this header, then install the module to a slot opening on the system chassis.

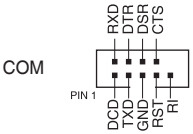

The COM port module is purchased separately.

15. Front Panel Audio header

The Front Panel Audio header is for a chassis-mounted front panel audio I/O module that supports HD Audio. Connect one end of the front panel audio I/O module cable to this header.

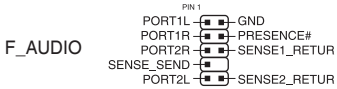

We recommend that you connect a high-definition front panel audio module to this connector to avail of the motherboard's high-definition audio capability.

Chapter 1

16. System Panel header

The System Panel header supports several chassis-mounted functions.

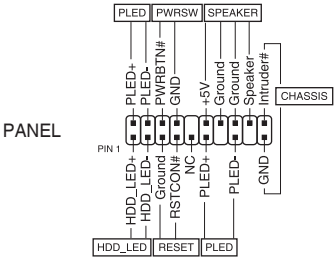

- **System Power LED header (PLED)**

  The 2-pin and/or 3-1 pin headers allow you to connect the System Power LED. The System Power LED lights up when the system is connected to a power source, or when you turn on the system power, and blinks when the system is in sleep mode.

- **Storage Device Activity LED header (HDD_LED)**

  The 2-pin header allows you to connect the Storage Device Activity LED. The Storage Device Activity LED lights up or blinks when data is read from or written to the storage device or storage device add-on card.

- **System Warning Speaker header (SPEAKER)**

  The 4-pin header allows you to connect the chassis-mounted system warning speaker. The speaker allows you to hear system beeps and warnings.

- **Power Button/Soft-off Button header (PWRSW)**

  The 3-1 pin header allows you to connect the system power button. Press the power button to power up the system, or put the system into sleep or soft-off mode (depending on the operating system settings).

- **Reset button header (RESET)**

  The 2-pin header allows you to connect the chassis-mounted reset button. Press the reset button to reboot the system.

This header is set to **[Reset]** by default. You can assign a different function to this header in the BIOS settings.

- **Chassis intrusion header (CHASSIS)**

  The 2-pin header allows you to connect the chassis-mounted intrusion detection sensor or switch. The chassis intrusion sensor or switch sends a high-level signal to the header when a chassis component is removed or replaced, the signal is then generated as a chassis intrusion event.

17. Thunderbolt™ (USB4®) header

The Thunderbolt™ (USB4®) header allows you to connect an add-on Thunderbolt™ I/O card that supports Intel®'s Thunderbolt™ Technology, allowing you to connect Thunderbolt™-enabled devices to form a daisy-chain configuration.

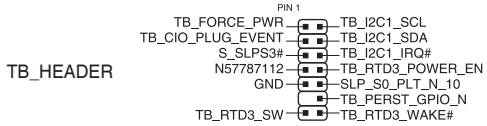

Please visit the official website of your purchased Thunderbolt™ card for more details on compatibility.

The Thunderbolt™ card can only be used when installed to the PCIEX16(G4) slot. Ensure to install your Thunderbolt™ card to the PCIEX16(G4) slot.

18. Q-LEDs

The Q-LEDs check key components (CPU, DRAM, VGA, and booting devices) during the motherboard booting process. If an error is found, the critical component's LED stays lit up until the problem is solved.

CPU (RED)
DRAM (YELLOW)
VGA (WHITE)
BOOT (YELLOW GREEN)

- The Q-LEDs provide the most probable cause of an error code as a starting point for troubleshooting. The actual cause may vary from case to case.
- The DRAM LED will detect if the memory modules have been installed in the recommended memory configuration slots as well as if the memory modules have been properly installed and seated in the memory slots once the motherboard is connected to a power supply. After the motherboard has been powered on, the DRAM LED will return to the original error checking procedure, regardless of the LED status prior to powering on.

1.3 Motherboard rear and audio connections

1.3.1 Rear I/O connection

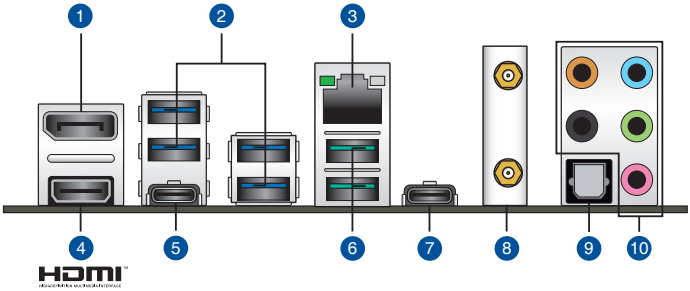

Rear panel connectors	
1.	DisplayPort
2.	USB 5Gbps (Blue) Type-A ports E1, E2, E3, and E4
3.	Intel® 2.5Gb Ethernet port*
4.	HDMI™ port
5.	USB 10Gbps Type-C® port C9
6.	USB 10Gbps (Teal blue) Type-A ports 3 and 4
7.	USB 20Gbps Type-C® port C1
8.	Wi-Fi module
9.	Optical S/PDIF OUT port
10.	Audio jacks**

*** and ** : Refer to the tables on the next page for LAN port LEDs, and audio port definitions.**

We strongly recommend that you connect your devices to ports with matching data transfer rate. For example connecting your USB 5Gbps devices to USB 5Gbps ports for faster and better performance for your devices.

*** Intel® 2.5Gb Ethernet port LED indications**

Activity Link LED	
Status	**Description**
OFF	No link
GREEN	Linked
BLINKING	Data activity

Speed LED	
Status	**Description**
OFF	No link
OFF	100 Mbps / 10 Mbps connection
GREEN	2.5 Gbps connection
ORANGE	1 Gbps connection

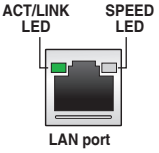

**** Audio 2, 4, 5.1 or 7.1-channel configuration**

Port	2-channel	4-channel	5.1-channel	7.1-channel
Light Blue (Rear panel)	–	–	–	Side Speaker Out
Lime (Rear panel)	Front Speaker Out	Front Speaker Out	Front Speaker Out	Front Speaker Out
Pink (Rear panel)	–	–	–	–
Black (Rear panel)	–	Rear Speaker Out	Rear Speaker Out	Rear Speaker Out
Orange (Rear panel)	–	–	Center/ Subwoofer	Center/ Subwoofer

1.3.2 Audio I/O connections

Audio I/O ports

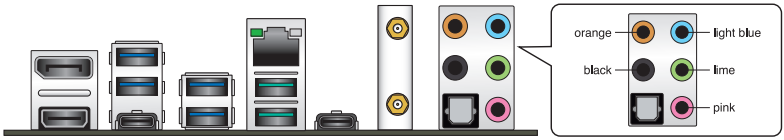

Connect to Headphone and Mic

Connect to 2-channel Speakers

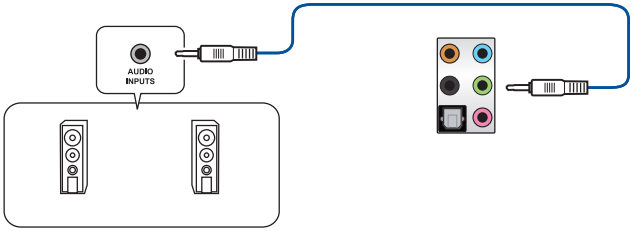

Connect to 4-channel Speakers

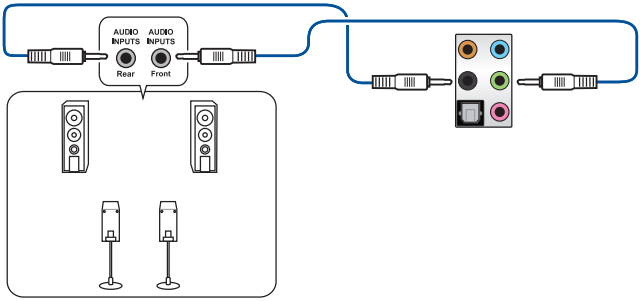

Connect to 5.1-channel Speakers

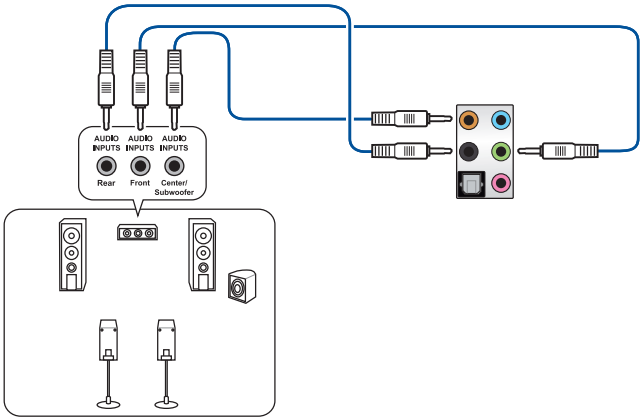

Connect to 7.1-channel Speakers

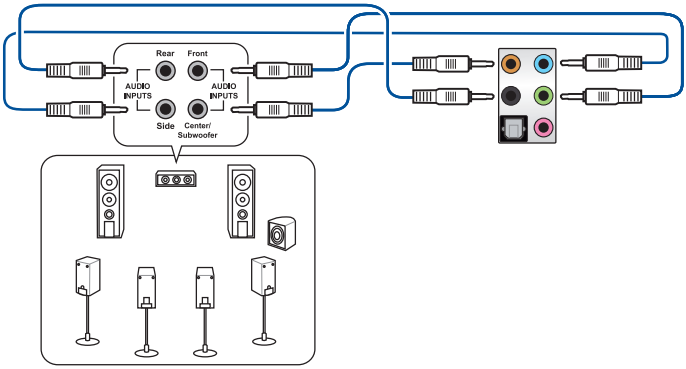

Basic Setup

2

The installation diagrams in this section are for reference only. The motherboard layout may vary with models, but the installation steps are the same for all models.

2.1 CPU installation

- Ensure that you install the correct CPU designed for LGA1700 socket only. DO NOT install a CPU designed for LGA1155, LGA1156, LGA1151, and LGA1200 sockets on the LGA1700 socket.
- The CPU fits in only one correct orientation. DO NOT force the CPU into the socket to prevent bending the connectors on the socket and damaging the CPU.
- Ensure that all power cables are unplugged before installing the CPU.
- Upon purchase of the motherboard, ensure that the PnP cap is on the socket and the socket contacts are not bent. Contact your retailer immediately if the PnP cap is missing, or if you see any damage to the PnP cap/socket contacts/motherboard components. ASUS will shoulder the cost of repair only if the damage is shipment/transit-related.

Install a heatsink or AIO cooler after installing the CPU. Please refer to the **Motherboard Installation Guide** on the ASUS support site, or to the user manual of the heatsink/AIO cooler for steps on installing the heatsink/AIO cooler.

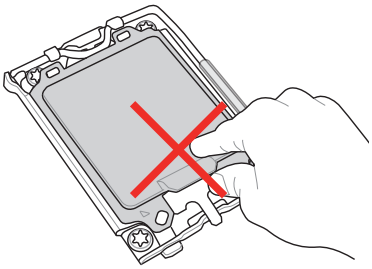

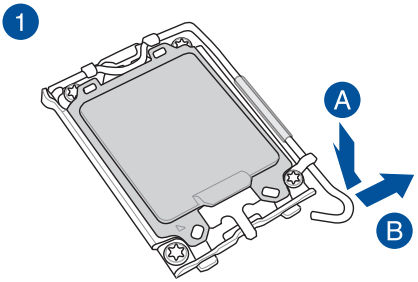

Take caution when lifting the load lever, ensure to hold onto the load lever when releasing the load lever. Letting go of the load lever immediately after releasing it may cause the load lever to spring back and cause damage to your motherboard.

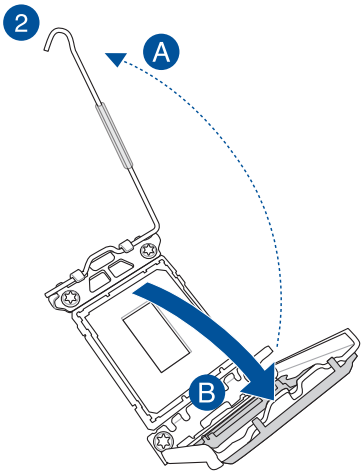

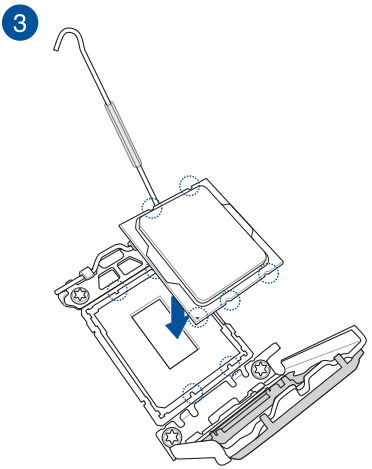

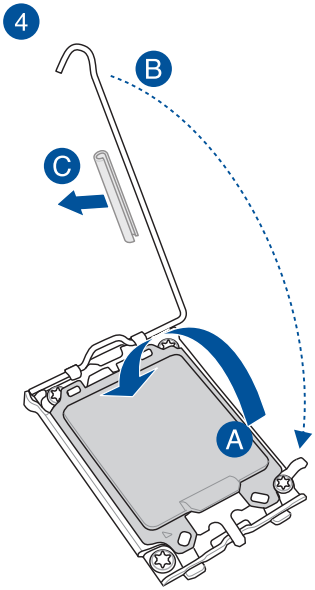

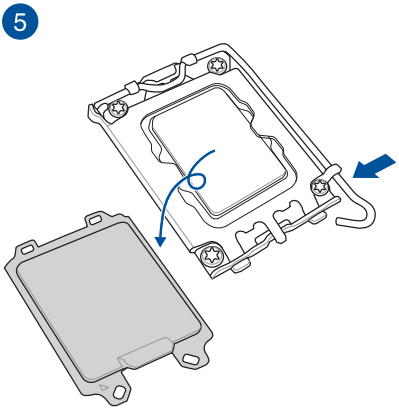

Ensure to remove the CPU Socket lever protector on the lever latch before locking the lever latch under the retention tab. Failure to do so may cause damages to your system when installing the cooling system.

2.2 DIMM installation

1

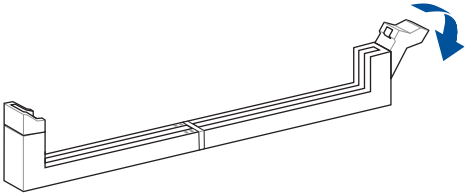

2

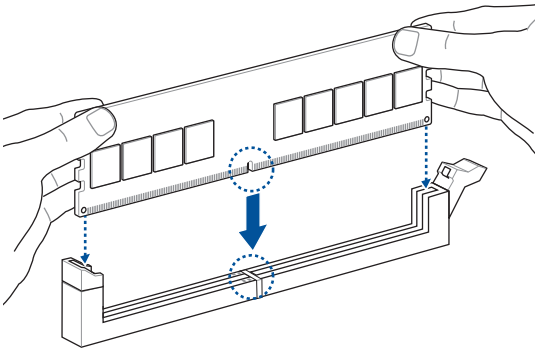

3

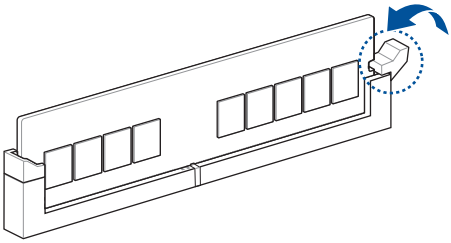

DIMM removal

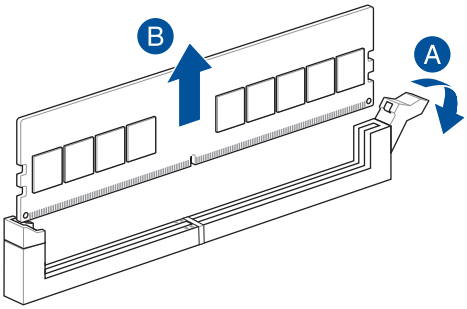

2.3 M.2 installation

- The illustrations only show the installation steps for a 22110 M.2 slot, the steps are the same for the other M.2 slots.
- Use a Phillips screwdriver when removing or installing the screws or screw stands mentioned in this section.
- If the thermal pad on the M.2 heatsink becomes damaged, we recommend replacing it with the bundled thermal pad or a thermal pad with a thickness of 1.25mm.
- Supported M.2 type varies per motherboard.

1. Loosen the screws from the M.2 heatsinks.
2. Lift and remove the heatsinks.

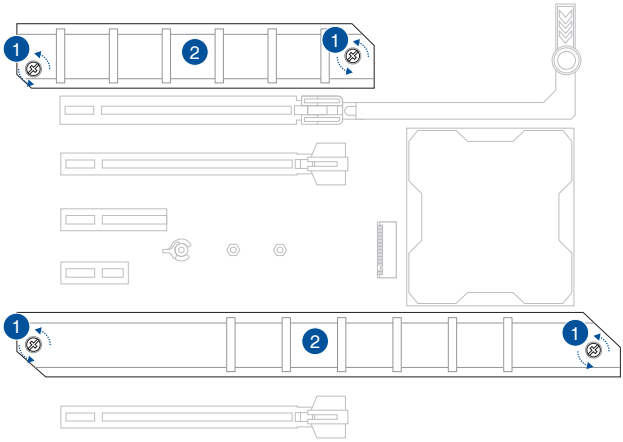

3. (optional) If required, remove the pre-installed removable M.2 Q-Latch screw at the 2280 length screw hole.

Only follow this step if a removable M.2 Q-Latch screw is pre-installed at the 2280 length screw hole and can be removed.

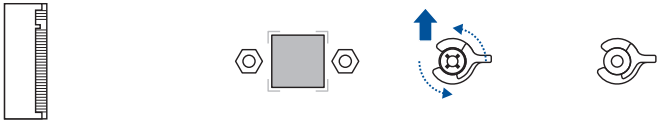

4. (optional) Install the bundled rubber for M.2 if you are installing a single sided M.2 module. DO NOT install the bundled rubber for M.2 when installing a double-sided M.2 module. The rubber installed by default is compatible with double sided M.2 modules.

Only follow this step if installing a 22110 or 2280 length M.2 module and when the rubber for M.2 comes bundled with your motherboard package.

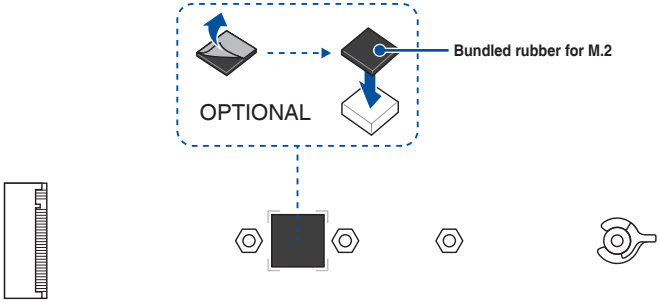

OR remove the M.2 rubber.

Only follow this step if installing a 2242 length M.2 module and the M.2 slot has an M.2 rubber pre-installed.

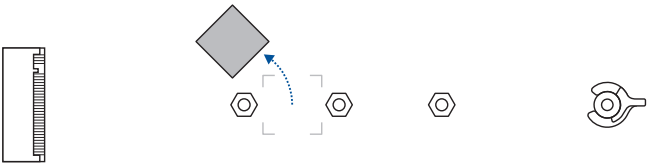

Chapter 2

5. (optional) Install the M.2 Q-Latch to the M.2 length screw hole you wish to install your M.2 module to.

You can use a bundled M.2 Q-Latch screw or a pre-installed removable M.2 Q-Latch screw.

6. Rotate and adjust the M.2 Q-Latch so that the handle points away from the M.2 slot.

7. Install your M.2 module to the M.2 slot.

Ensure that there is nothing obstructing your M.2 module when installing the M.2 module to the M.2 slot.

8. Rotate the M.2 Q-Latch clockwise to secure the M.2 module in place.

9. Remove the plastic film from the thermal pads on the bottom of the heatsinks.

If the thermal pad on the M.2 heatsink becomes damaged, we recommend replacing it with the bundled thermal pad or a thermal pad with a thickness of 1.25mm.

10. Replace the heatsinks.

11. Secure the heatsinks using the screws on the heatsinks.

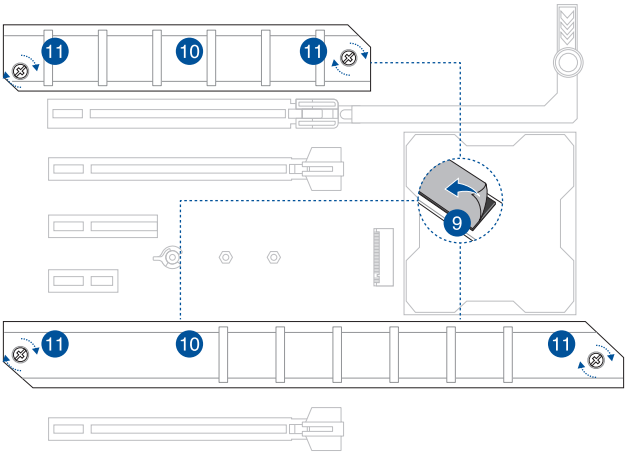

Chapter 2

2.4 Motherboard installation

1. (on selected models) Install the bundled I/O Shield to the chassis rear I/O panel.

Only install the I/O Shield if your motherboard does not have a pre-installed I/O shield.

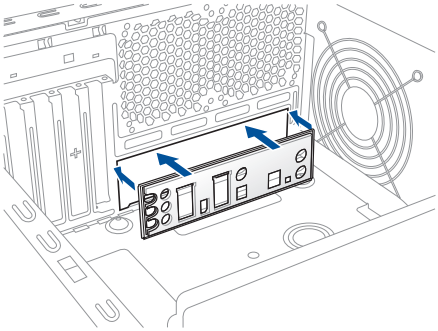

2. Place the motherboard into the chassis, ensuring that its rear I/O ports are aligned to the chassis' rear I/O panel.
3. Place nine (9) screws into the holes indicated by circles to secure the motherboard to the chassis.

This instruction is for reference only, please place the amount of screws according to your installation situation.

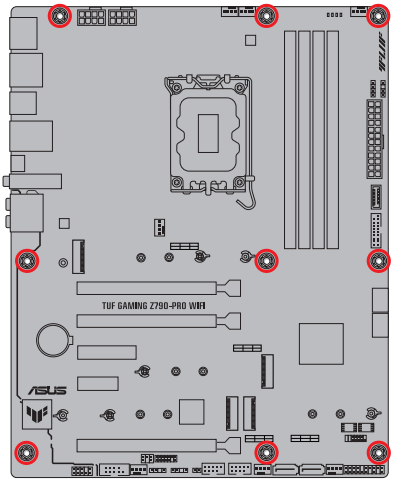

DO NOT over tighten the screws! Doing so can damage the motherboard.

2.5 Expansion card installation

2.5.1 Thunderbolt™ series card installation

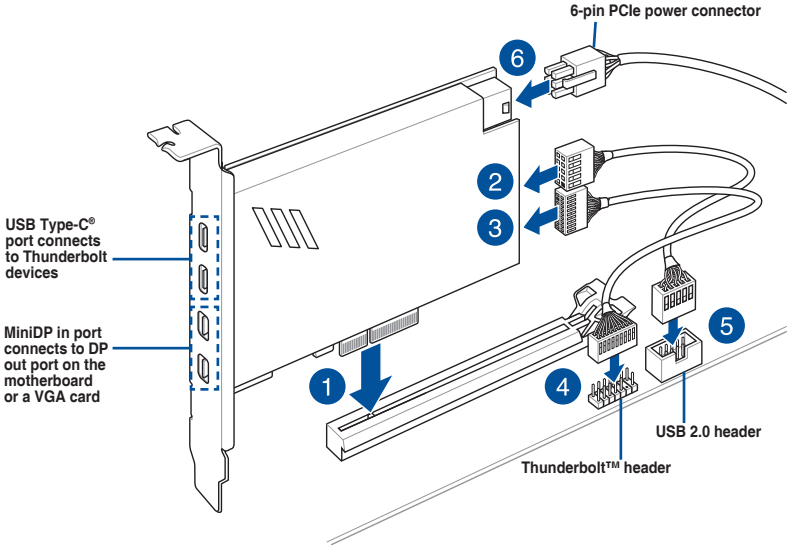

The Thunderbolt™ card can only be used when installed to the PCIEX16(G4) slot. Ensure to install your Thunderbolt™ card to the PCIEX16(G4) slot.

- Step 6 is optional, please connect a 6-pin PCIe power connector when you wish to use the USB Type-C® port Thunderbolt™ quick charge feature to charge a 5V or more device.
- The TypeC_1 port can support up to 20V devices, and the TypeC_2 port can support up to 9V devices when the 6-pin PCIe power connector is connected.
- Please visit the official website of your purchased Thunderbolt™ card for more details on compatibility.

2.6 ASUS WiFi Q-Antenna installation (on selected models)

Installing the ASUS WiFi Q-Antenna

Connect the bundled ASUS WiFi Q-Antenna connector to the Wi-Fi ports at the back of the chassis.

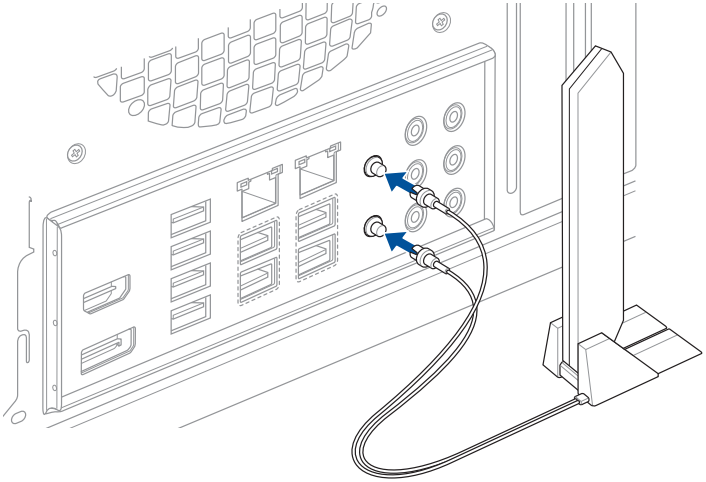

- Ensure to hold tightly onto the connector when removing the antenna connector from the Wi-Fi ports, and refrain from attempting to remove the antenna connector from the Wi-Fi ports by pulling on the antenna connector cable.
- The antenna can only be extended to a right angle (90°). Do not force the antenna into an angle more than 90°, doing so may cause damages to the ASUS WiFi Q-Antenna.

- Ensure that the ASUS WiFi Q-Antenna is securely installed to the Wi-Fi ports.
- Ensure that the antenna is at least 20 cm away from all persons.

The illustration above is for reference only. The I/O port layout may vary with models, but the WiFi Q-Antenna installation procedure is the same for all models.

Using ASUS WiFi Q-Antenna functions

The ASUS WiFi Q-Antenna features a Direction Finder and Fast Check function, you can learn more about these feature and how to use them in the **ASUS WiFi Q-Antenna** tab in Armoury Crate.

The ASUS WiFi Q-Antenna function in Armoury Crate is only supported on the bundled antenna and Wi-Fi module.

2.7 Starting up for the first time

1. After making all the connections, replace the system case cover.
2. Ensure that all switches are off.
3. Connect the power cord to the power connector at the back of the system chassis.
4. Connect the power cord to a power outlet that is equipped with a surge protector.
5. Turn on the devices in the following order:
   a. Monitor
   b. External storage devices (starting with the last device on the chain)
   c. System power
6. After applying power, the system power LED on the system front panel case lights up. For systems with ATX power supplies, the system LED lights up when you press the ATX power button. If your monitor complies with the "green" standards or if it has a "power standby" feature, the monitor LED may light up or change from orange to green after the system LED turns on.

   The system then runs the power-on self tests (POST). While the tests are running, the BIOS beeps (refer to the BIOS beep codes table) or additional messages appear on the screen. If you do not see anything within 30 seconds from the time you turned on the power, the system may have failed a power-on test. Check the jumper settings and connections or call your retailer for assistance.

BIOS Beep	Description
One short beep	VGA detected Quick boot set to disabled No keyboard detected
One continuous beep followed by two short beeps then a pause (repeated)	No memory detected
One continuous beep followed by three short beeps	No VGA detected
One continuous beep followed by four short beeps	Hardware component failure

7. At power on, hold down the <Delete> key to enter the BIOS Setup. Follow the instructions in Chapter 3.

2.8 Turning off the computer

While the system is ON, press the power button for less than four seconds to put the system on sleep mode or soft-off mode, depending on the BIOS setting. Press the power button for more than four seconds to let the system enter the soft-off mode regardless of the BIOS setting.

BIOS and RAID Support

3

For more details on BIOS and RAID configurations, please refer to Manual & Document under the Support tab of the product information site, or visit https://www.asus.com/support.

3.1 Knowing UEFI BIOS

BIOS (Basic Input and Output System) stores system hardware settings such as storage device configuration, overclocking settings, advanced power management, and boot device configuration that are needed for system startup in the motherboard CMOS. In normal circumstances, the default BIOS settings apply to most conditions to ensure optimal performance. **DO NOT change the default BIOS settings** except in the following circumstances:

- An error message appears on the screen during the system bootup and requests you to run the BIOS Setup.
- You have installed a new system component that requires further BIOS settings or update.

Inappropriate BIOS settings may result to instability or boot failure. **We strongly recommend that you change the BIOS settings only with the help of a trained service personnel**.

BIOS settings and options may vary due to different BIOS release versions. Please refer to the latest BIOS version for settings and options.

Entering BIOS at startup

To enter BIOS Setup at startup, press <Delete> or <F2> during the Power-On Self Test (POST). If you do not press <Delete> or <F2>, POST continues with its routines.

- If the system becomes unstable after changing any BIOS setting, load the default settings to ensure system compatibility and stability. Select the **Load Optimized Defaults** item under the **Exit** menu or press the <F5> hotkey.
- If the system fails to boot after changing any BIOS setting, try to clear the CMOS and reset the motherboard to the default value.
- The BIOS setup program does not support Bluetooth devices.

BIOS menu screen

The BIOS Setup program can be used under two modes: **EZ Mode** and **Advanced Mode**. You can change modes from **Setup Mode** in **Boot menu** or by pressing the <F7> hotkey.

3.2 ASUS EZ Flash 3

The ASUS EZ Flash 3 feature allows you to update the BIOS without using an OS-based utility.

Ensure to load the BIOS default settings to ensure system compatibility and stability. Select the **Load Optimized Defaults** item under the **Exit** menu or press the <F5> hotkey.

To update the BIOS:

- This function can support devices such as a USB flash disk with FAT 32/16 format and single partition only.
- DO NOT shut down or reset the system while updating the BIOS to prevent system boot failure!

1. Insert the USB flash disk that contains the latest BIOS file to the USB port.
2. Enter the Advanced Mode of the BIOS setup program. Go to the **Tool** menu to select **ASUS EZ Flash 3 Utility** and press <Enter>.
3. Press the Left arrow key to switch to the **Drive** field.
4. Press the Up/Down arrow keys to find the USB flash disk that contains the latest BIOS, and then press <Enter>.
5. Press the Right arrow key to switch to the **Folder** field.
6. Press the Up/Down arrow keys to find the BIOS file, and then press <Enter> to perform the BIOS update process. Reboot the system when the update process is done.

3.3 ASUS CrashFree BIOS 3

The ASUS CrashFree BIOS 3 utility is an auto recovery tool that allows you to restore the BIOS file when it fails or gets corrupted during the updating process. You can restore a corrupted BIOS file using a USB flash drive that contains the BIOS file.

Recovering the BIOS

1. Download the latest BIOS version for this motherboard from https://www.asus.com/support/.
2. Rename the file using one of the following methods:
   - Launch the **BIOSRenamer.exe** application to automatically rename the file.
   - Manually rename the file to the BIOS CAP filename specified in the **Specifications summary** section.
   - Manually rename the file to **asus.cap**.
3. Copy the renamed file to your USB storage device.
4. Turn on the system.
5. Insert the USB flash drive containing the BIOS file to a USB port.
6. The utility automatically checks the devices for the BIOS file. When found, the utility reads the BIOS file and enters ASUS EZ Flash 3 automatically.
7. The system requires you to enter BIOS Setup to recover the BIOS setting. To ensure system compatibility and stability, we recommend that you press the <F5> hotkey to load default BIOS values.

DO NOT shut down or reset the system while updating the BIOS! Doing so may cause system boot failure!

3.4 RAID configurations

The motherboard supports RAID configurations.

RAID definitions

RAID 0 (Data striping) optimizes two identical hard disk drives to read and write data in parallel, interleaved stacks. Two hard disks perform the same work as a single drive but at a sustained data transfer rate, double that of a single disk alone, thus improving data access and storage. Use of two new identical hard disk drives is required for this setup.

RAID 1 (Data mirroring) copies and maintains an identical image of data from one drive to a second drive. If one drive fails, the disk array management software directs all applications to the surviving drive as it contains a complete copy of the data in the other drive. This RAID configuration provides data protection and increases fault tolerance to the entire system. Use two new drives or use an existing drive and a new drive for this setup. The new drive must be of the same size or larger than the existing drive.

RAID 5 stripes both data and parity information across three or more hard disk drives. Among the advantages of RAID 5 configuration include better HDD performance, fault tolerance, and higher storage capacity. The RAID 5 configuration is best suited for transaction processing, relational database applications, enterprise resource planning, and other business systems. Use a minimum of three identical hard disk drives for this setup.

RAID 10 is data striping and data mirroring combined without parity (redundancy data) having to be calculated and written. With the RAID 10 configuration you get all the benefits of both RAID 0 and RAID 1 configurations. Use four new hard disk drives or use an existing drive and three new drives for this setup.

Appendix

General Notices

FCC Compliance Information

Responsible Party:	Asus Computer International
Address:	48720 Kato Rd., Fremont, CA 94538, USA
Phone / Fax No:	(510)739-3777 / (510)608-4555

This device complies with part 15 of the FCC Rules. Operation is subject to the following two conditions: (1) This device may not cause harmful interference, and (2) this device must accept any interference received, including interference that may cause undesired operation.

This equipment has been tested and found to comply with the limits for a Class B digital device, pursuant to part 15 of the FCC Rules. These limits are designed to provide reasonable protection against harmful interference in a residential installation. This equipment generates, uses and can radiate radio frequency energy and, if not installed and used in accordance with the instructions, may cause harmful interference to radio communications. However, there is no guarantee that interference will not occur in a particular installation. If this equipment does cause harmful interference to radio or television reception, which can be determined by turning the equipment off and on, the user is encouraged to try to correct the interference by one or more of the following measures:

- Reorient or relocate the receiving antenna.
- Increase the separation between the equipment and receiver.
- Connect the equipment into an outlet on a circuit different from that to which the receiver is connected.
- Consult the dealer or an experienced radio/TV technician for help.

HDMI Trademark Notice

The terms HDMI, HDMI High-Definition Multimedia Interface, HDMI Trade dress, and the HDMI Logo are trademarks or registered trademarks of HDMI Licensing Administrator, Inc.

HIGH-DEFINITION MULTIMEDIA INTERFACE

Safety Precautions

Accessories that came with this product have been designed and verified for the use in connection with this product. Never use accessories for other products to prevent the risk of electric shock or fire.

安全上のご注意

付属品は当該専用品です。他の機器には使用しないでください。機器の破損もしくは、火災や感電の原因となることがあります。

VCCI: Japan Compliance Statement

Class B ITE

この装置は、クラスＢ情報技術装置です。この装置は、家庭環境で使用することを目的としていますが、この装置がラジオやテレビジョン受信機に近接して使用されると、受信障害を引き起こすことがあります。

取扱説明書に従って正しい取り扱いをして下さい。

ＶＣＣＩ－Ｂ

Japan JATE

本製品は電気通信事業者（移動通信会社、固定通信会社、インターネットプロバイダ等）の通信回線（公衆無線LANを含む）に直接接続することができません。本製品をインターネットに接続する場合は、必ずルーター等を経由し接続してください。

Declaration of compliance for product environmental regulation

ASUS follows the green design concept to design and manufacture our products, and makes sure that each stage of the product life cycle of ASUS product is in line with global environmental regulations. In addition, ASUS disclose the relevant information based on regulation requirements.

Please refer to http://csr.asus.com/Compliance.htm for information disclosure based on regulation requirements ASUS is complied with:

EU REACH and Article 33

Complying with the REACH (Registration, Evaluation, Authorisation, and Restriction of Chemicals) regulatory framework, we published the chemical substances in our products at ASUS REACH website at http://csr.asus.com/english/REACH.htm.

EU RoHS

This product complies with the EU RoHS Directive. For more details, see http://csr.asus.com/english/article.aspx?id=35

India RoHS

This product complies with the “India E-Waste (Management) Rules, 2016” and prohibits use of lead, mercury, hexavalent chromium, polybrominated biphenyls (PBBs) and polybrominated diphenyl ethers (PBDEs) in concentrations exceeding 0.1% by weight in homogenous materials and 0.01% by weight in homogenous materials for cadmium, except for the exemptions listed in Schedule II of the Rule.

Vietnam RoHS

ASUS products sold in Vietnam, on or after September 23, 2011,meet the requirements of the Vietnam Circular 30/2011/TT-BCT.

Các sản phẩm ASUS bán tại Việt Nam, vào ngày 23 tháng 9 năm2011 trở về sau, đều phải đáp ứng các yêu cầu của Thông tư 30/2011/TT-BCT của Việt Nam.

Türkiye RoHS

AEEE Yönetmeliğine Uygundur

ASUS Recycling/Takeback Services

ASUS recycling and takeback programs come from our commitment to the highest standards for protecting our environment. We believe in providing solutions for you to be able to responsibly recycle our products, batteries, other components as well as the packaging materials. Please go to http://csr.asus.com/english/Takeback.htm for detailed recycling information in different regions.

DO NOT throw the motherboard in municipal waste. This product has been designed to enable proper reuse of parts and recycling. This symbol of the crossed out wheeled bin indicates that the product (electrical and electronic equipment) should not be placed in municipal waste. Check local regulations for disposal of electronic products.

DO NOT throw the mercury-containing button cell battery in municipal waste. This symbol of the crossed out wheeled bin indicates that the battery should not be placed in municipal waste.

France sorting and recycling information

Appendix

Notices for Wi-Fi model

FCC RF Caution Statement

WARNING: Any changes or modifications not expressly approved by the party responsible for compliance could void your authority to operate the equipment.

FCC Wi-Fi 6E Caution Statement

Operation of transmitters in the 5.925-7.125 GHz band is prohibited for control of or communications with unmanned aircraft systems.

RF exposure warning

This equipment must be installed and operated in accordance with provided instructions and the antenna(s) used for this transmitter must be installed to provide a separation distance of at least 20 cm from all persons and must not be co-located or operating in conjunction with any other antenna or transmitter. End-users and installers must be provide with antenna installation instructions and transmitter operating conditions for satisfying RF exposure compliance.

Compliance Statement of Innovation, Science and Economic Development Canada (ISED)

This device complies with Innovation, Science and Economic Development Canada licence exempt RSS standard(s). Operation is subject to the following two conditions: (1) this device may not cause interference, and (2) this device must accept any interference, including interference that may cause undesired operation of the device.

Operation in the band 5150–5250 MHz is only for indoor use to reduce the potential for harmful interference to co-channel mobile satellite systems.

CAN ICES-003(B)/NMB-003(B)

Déclaration de conformité de Innovation, Sciences et Développement économique Canada (ISED)

Le présent appareil est conforme aux CNR d'Innovation, Sciences et Développement économique Canada applicables aux appareils radio exempts de licence. L'exploitation est autorisée aux deux conditions suivantes : (1) l'appareil ne doit pas produire de brouillage, et (2) l'utilisateur de l'appareil doit accepter tout brouillage radioélectrique subi, même si le brouillage est susceptible d'en compromettre le fonctionnement.

La bande 5150–5250 MHz est réservée uniquement pour une utilisation à l'intérieur afin de réduire les risques de brouillage préjudiciable aux systèmes de satellites mobiles utilisant les mêmes canaux.

CAN ICES-003(B)/NMB-003(B)

ISED Wi-Fi 6E Caution Statement (RLAN devices)

Devices shall not be used for control of or communications with unmanned aircraft systems.

Les dispositifs ne doivent pas être utilisés pour commander des systèmes d'aéronef sans pilote ni pour communiquer avec de tels systèmes.

KC: Korea Warning Statement

B급 기기 (가정용 방송통신기자재)
이 기기는 가정용(B급) 전자파적합기기로서 주로 가정에서 사용하는 것을 목적으로 하며, 모든 지역에서 사용할 수 있습니다.

*당해 무선설비는 전파혼신 가능성이 있으므로 인명안전과 관련된 서비스는 할 수 없습니다.

NCC: Wireless Statement

取得審驗證明之低功率射頻器材，非經核准，公司、商號或使用者均不得擅自變更頻率、加大功率或變更原設計之特性及功能。低功率射頻器材之使用不得影響飛航安全及干擾合法通信；經發現有干擾現象時，應立即停用，並改善至無干擾時方得繼續使用。前述合法通信，指依電信管理法規定作業之無線電通信。低功率射頻器材須忍受合法通信或工業、科學及醫療用電波輻射性電機設備之干擾。

應避免影響附近雷達系統之操作。

Japan RF Equipment Statement

屋外での使用について

電波法の定めにより5.2GHz、5.3GHz、及び6GHz帯域の電波は屋外での使用が禁じられています（法令により許可された場合を除く）。

法律および規制遵守

本製品は電波法及びこれに基づく命令の定めるところに従い使用してください。日本国外では、その国の法律または規制により、本製品の使用ができないことがあります。このような国では、本製品を運用した結果、罰せられることがありますが、当社は一切責任を負いかねますのでご了承ください。

Précautions d'emploi de l'appareil :

a. Soyez particulièrement vigilant quant à votre sécurité lors de l'utilisation de cet appareil dans certains lieux (les avions, les aéroports, les hôpitaux, les stations-service et les garages professionnels).

b. Évitez d'utiliser cet appareil à proximité de dispositifs médicaux implantés. Si vous portez un implant électronique (stimulateurs cardiaques, pompes à insuline, neurostimulateurs…), veuillez impérativement respecter une distance minimale de 15 centimètres entre cet appareil et l'implant pour réduire les risques d'interférence.

c. Utilisez cet appareil dans de bonnes conditions de réception pour minimiser le niveau de rayonnement. Ce n'est pas toujours le cas dans certaines zones ou situations, notamment dans les parkings souterrains, dans les ascenseurs, en train ou en voiture ou tout simplement dans un secteur mal couvert par le réseau.

d. Tenez cet appareil à distance du ventre des femmes enceintes et du bas-ventre des adolescents.

Simplified UKCA Declaration of Conformity

ASUSTek Computer Inc. hereby declares that this device is in compliance with the essential requirements and other relevant provisions of The Radio Equipment Regulations 2017 (S.I. 2017/1206). Full text of UKCA declaration of conformity is available at https://www.asus.com/support/.

The WiFi operating in the band 5150-5350MHz shall be restricted to indoor use for the country listed below:

UK

UKCA RF Output table (The Radio Equipment Regulations 2017)

WI-FI 6E AX211NGW (Model: AX211NGW):

a. Low Power Indoor (LPI) Wi-Fi 6E devices:
The device is restricted to indoor use only when operating in the 5925 to 6425 MHz frequency range in UK.

b. Very Low Power (VLP) Wi-Fi 6E devices (portable devices):
The device is not permitted to be used on Unmanned Aircraft Systems (UAS) when operating in the 5925 to 6425 MHz frequency range in UK.

Function	Frequency	Maximum Output Power (EIRP)
WiFi	2412 - 2472 MHz	19 dBm
	5150 - 5350 MHz	20 dBm
	5470 - 5725 MHz	21 dBm
	5725 - 5850 MHz	12 dBm
	5945 - 6425 MHz	17 dBm
Bluetooth	2402 - 2480 MHz	12 dBm

* Receiver category 1

Simplified EU Declaration of Conformity

ASUSTek Computer Inc. hereby declares that this device is in compliance with the essential requirements and other relevant provisions of Directive 2014/53/EU. Full text of EU declaration of conformity is available at https://www.asus.com/support/.

The WiFi operating in the band 5150-5350MHz shall be restricted to indoor use for countries listed in the table below:

a. Low Power Indoor (LPI) Wi-Fi 6E devices:
The device is restricted to indoor use only when operating in the 5945 to 6425 MHz frequency range in Belgium (BE), Bulgaria (BG), Cyprus (CY), Czech Republic (CZ), Estonia (EE), France (FR), Iceland (IS), Ireland (IE), Lithuania (LT), Germany (DE), Netherlands (NL), Spain (ES).

b. Very Low Power (VLP) Wi-Fi 6E devices (portable devices):
The device is not permitted to be used on Unmanned Aircraft Systems (UAS) when operating in the 5945 to 6425 MHz frequency range in Belgium (BE), Bulgaria (BG), Cyprus (CY), Czech Republic (CZ), Estonia (EE), France (FR), Iceland (IS), Ireland (IE), Lithuania (LT), Germany (DE), Netherlands (NL), Spain (ES).

Déclaration simplifiée de conformité de l'UE

ASUSTek Computer Inc. déclare par la présente que cet appareil est conforme aux critères essentiels et autres clauses pertinentes de la directive 2014/53/EU. La déclaration de conformité de l'UE peut être téléchargée à partir du site internet suivant : https://www.asus.com/support/.

Dans la plage de fréquence 5150-5350 MHz, le Wi-Fi est restreint à une utilisation en intérieur dans les pays listés dans le tableau ci-dessous:

a. Pour les appareils Wi-Fi 6E LPI (Low Power Indoor) :
L'appareil est limité à une utilisation en intérieur uniquement lorsqu'il fonctionne dans la plage de fréquences 5945-6425MHz en Belgique (BE), Bulgarie (BG), Chypre (CY), République tchèque (CZ), Estonie (EE), France (FR), Islande (IS), Irlande (IE), Lituanie (LT), Allemagne (DE), Pays-Bas (NL), Espagne (ES).

b. Pour les appareils portables Wi-Fi 6E VLP (Very Low Power) :
L'appareil n'est pas autorisé à être utilisé sur des systèmes d'aéronefs sans pilote (UAS) lorsqu'il fonctionne dans la plage de fréquences 5945-6425MHz en Belgique (BE), en Bulgarie (BG), Chypre (CY), République tchèque (CZ), Estonie (EE), France (FR), Islande (IS), Irlande (IE), Lituanie (LT), Allemagne (DE), Pays-Bas (NL), Espagne (ES).

Vereinfachte EU-Konformitätserklärung

ASUSTek COMPUTER INC erklärt hiermit, dass dieses Gerät mit den grundlegenden Anforderungen und anderen relevanten Bestimmungen der Richtlinie 2014/53/EU übereinstimmt. Der gesamte Text der EU-Konformitätserklärung ist verfügbar unter: https://www.asus.com/support/.

Der WLAN-Betrieb im Band von 5150-5350 MHz ist für die in der unteren Tabelle aufgeführten Länder auf den Innenbereich beschränkt:

a. Low Power Indoor (LPI) Wi-Fi 6E-Geräte:
Das Gerät ist auf den Innenbereich beschränkt, wenn es im Frequenzbereich von 5945 MHz bis 6425 MHz in Belgien (BE), Bulgarien (BG), Zypern (CY), der Tschechischen Republik (CZ), Estland (EE), Frankreich (FR), Island (IS), Irland (IE), Litauen (LT), Deutschland (DE), den Niederlanden (NL), Spanien (ES) betrieben wird.

b. Very Low Power (VLP) Wi-Fi 6E-Geräte (tragbare Geräte):
Das Gerät darf nicht auf unbemannten Luftfahrzeugsystemen (UAS) verwendet werden, wenn es im Frequenzbereich von 5945 MHz bis 6425 MHz in Belgien (BE), Bulgarien (BG), Zypern (CY), der Tschechischen Republik (CZ), Estland (EE), Frankreich (FR), Island (IS), Irland (IE), Litauen (LT), Deutschland (DE), den Niederlanden (NL), Spanien (ES) betrieben wird.

Dichiarazione di conformità UE semplificata

ASUSTek Computer Inc. con la presente dichiara che questo dispositivo è conforme ai requisiti essenziali e alle altre disposizioni pertinenti con la direttiva 2014/53/EU. Il testo completo della dichiarazione di conformità UE è disponibile all'indirizzo: https://www.asus.com/support/.

L'utilizzo della rete Wi-Fi con frequenza compresa nell'intervallo 5150-5350MHz deve essere limitato all'interno degli edifici per i paesi presenti nella seguente tabella:

a. Dispositivi LPI (Low Power Indoor) Wi-Fi 6E:
Il dispositivo è limitato all'uso in ambienti interni quando funziona nella gamma di frequenza da 5945 a 6425 MHz in Belgio (BE), Bulgaria (BG), Cipro (CY), Repubblica Ceca (CZ), Estonia (EE), Francia (FR), Islanda (IS), Irlanda (IE), Lituania (LT), Germania (DE), Paesi Bassi (NL), Spagna (ES).

b. Dispositivi VLP (Very Low Power) Wi-Fi 6E (dispositivi portatili):
Il dispositivo non può essere utilizzato su Unmanned Aircraft Systems (UAS) quando opera nella gamma di frequenza da 5945 a 6425 MHz in Belgio (BE), Bulgaria (BG), Cipro (CY), Repubblica Ceca (CZ), Estonia (EE), Francia (FR), Islanda (IS), Irlanda (IE), Lituania (LT), Germania (DE), Paesi Bassi (NL), Spagna (ES).

Упрощенное заявление о соответствии европейской директиве

ASUSTek Computer Inc. заявляет, что устройство соответствует основным требованиям и другим соответствующим условиям директивы 2014/53/EU. Полный текст декларации соответствия ЕС доступен на https://www.asus.com/support/.

Работа WiFi в диапазоне частот 5150-5350 должна быть ограничена использованием в помещениях для стран, перечисленных в таблице ниже:

a. Устройства Wi-Fi 6E с низким энергопотреблением в помещении (LPI):
Устройство разрешено ис-пользовать только в помещении при работе в диапазоне частот от 5945 до 6425 МГц в Бельгии (BE), Болгарии (BG), Кипре (CY), Чехии (CZ), Эстонии (EE), Франции (FR), Исландии (IS), Ирландии (IE), Литве (LT), Германии (DE), Нидерландах (NL), Испании (ES).

b. Устройства Wi-Fi 6E с очень низким энергопотреблением (VLP) (портативные устройства):
Устройство не разрешается использовать в беспилотных авиационных системах (БАС) при ра-боте в диапазоне частот от 5945 до 6425 МГц в Бельгии (BE), Болгарии (BG), Кипре (CY), Чехии (CZ), Эстонии (EE), Франции (FR), Исландии (IS), Ирландии (IE), Литве (LT), Германии (DE), Нидерландах (NL), Испании (ES).

إعلان التوافق المبسط الصادر عن الاتحاد الأوروبي

تقر شركة ASUSTek Computer أن هذا الجهاز يتوافق مع المتطلبات الأساسية والأحكام الأخرى ذات الصلة الخاصة بتوجيه 2014/53/EU. يتوفر النص الكامل لإعلان التوافق الصادر عن الاتحاد الأوروبي على:
https://www.asus.com/support/.

يجب حصر استخدام WiFi العاملة بـ 5150-5350 ميجا هرتز على الاستخدام المنزلي للبلدان المدرجة بالجدول.

a. أجهزة Wi-Fi 6E الداخلية منخفضة الطاقة (LPI):
يحظر استخدام الجهاز استخدام داخلي إلا عندما يعمل في نطاق ترددي من 5945 لـ 6425 ميجا هرتز في بلجيكا وبلغاريا وقبرص وجمهورية التشيك وإستونيا وفرنسا وأيسلندا وأيرلندا وليتوانيا وألمانيا وهولندا وإسبانيا.

b. أجهزة Wi-Fi 6E منخفضة الطاقة بشدة (VLP) (الأجهزة المحمولة):
لا يسمح باستخدام الجهاز على أنظمة الطيران الآلية عندما يعمل في نطاق ترددي من 5945 لـ 6425 ميجا هرتز في بلجيكا وبلغاريا وقبرص وجمهورية التشيك وإستونيا وفرنسا وأيسلندا وأيرلندا وليتوانيا وألمانيا وهولندا وإسبانيا.

Опростена декларация за съответствие на ЕС

С настоящото ASUSTek Computer Inc. декларира, че това устройство е в съответствие със съществените изисквания и другите приложими постановления на свързаната Директива 2014/53/ЕС. Пълният текст на ЕС декларация за съвместимост е достъпен на адрес https://www.asus.com/support/.

WiFi, работеща в диапазон 5150-5350MHz, трябва да се ограничи до употреба на закрито за страните, посочени в таблицата по-долу:

а. Ниско захранване на закрито (LPI) Wi-Fi 6E устройства:
Устройството е ограничено до употреба само на закрито, когато работи в честотния диапазон от 5945 до 6425 в Белгия (BE), България (BG), Кипър (CY), Чехия (CZ), Естония (EE), Франция (FR), Исландия (IS), Ирландия (IE), Литва (LT), Германия (DE), Нидерландия (NL), Испания (ES).

б. Много ниско захранване (VLP) Wi-Fi 6E устройства (преносими устройства):
Устройството не е разрешено за употреба в безпилотни летателни средства (UAS) при работа в честотния диапазон от 5945 до 6425 MHz в Белгия (BE), България (BG), Кипър (CY), Чехия (CZ), Естония (EE), Франция (FR), Исландия (IS), Ирландия (IE), Литва (LT), Германия (DE), Нидерландия (NL), Испания (ES).

Declaração de Conformidade UE Simplificada

ASUSTek Computer Inc. declara que este dispositivo está em conformidade com os requisitos essenciais e outras disposições relevantes relacionadas às diretivas 2014/53/UE. O texto completo da declaração de conformidade CE está disponível em https://www.asus.com/support/.

O WiFi operando na banda 5150-5350MHz deve ser restrito para uso interno para os países listados na tabela abaixo:

a. Dispositivos Wi-Fi 6E Internos de Baixa Potência (LPI):
O dispositivo é restrito apenas para uso interno quando operar na faixa de frequência de 5945 a 6425 MHz na Bélgica (BE), Bulgária (BG), Chipre (CY), República Tcheca (CZ), Estônia (EE), França (FR), Islândia (IS), Irlanda (IE), Lituânia (LT), Alemanha (DE), Países Baixos (NL), Espanha (ES).

b. Dispositivos Wi-Fi 6E de Potência Muito Baixa (VLP) (dispositivos portáteis):
O dispositivo não é permitido para uso nos Sistemas de Aeronaves Não Tripuladas (UAS) quando operar na faixa de frequência de 5945 a 6425 MHz na Bélgica (BE), Bulgária (BG), Chipre (CY), República Tcheca (CZ), Estônia (EE), França (FR), Islândia (IS), Irlanda (IE), Lituânia (LT), Alemanha (DE), Países Baixos (NL), Espanha (ES).

Pojednostavljena EU Izjava o sukladnosti

ASUSTeK Computer Inc. ovim izjavljuje da je ovaj uređaj sukladan s bitnim zahtjevima i ostalim odgovarajućim odredbama direktive 2014/53/EU. Cijeli tekst EU izjave o sukladnosti dostupan je na https://www.asus.com/support/.

WiFi koji radi na opsegu frekvencija 5150-5350 MHz bit će ograničen na upotrebu u zatvorenom prostoru u zemljama na donjem popisu:

a. Unutarnji uređaji male snage (LPI) Wi-Fi 6E:
   Uređaj je ograničen na upotrebu u zatvorenom prostoru samo kada radi u frekvencijskom pojasu od 5945 do 6425 MHz u Belgiji (BE), Bugarskoj (BG), Cipru (CY), Češkoj (CZ), Estoniji (EE), Francuskoj (FR), Islandu (IS), Irskoj (IE), Litvi (LT), Njemačkoj (DE), Nizozemskoj (NL), Španjolskoj (ES).

b. Uređaji vrlo male snage (VLP) Wi-Fi 6E (prijenosni uređaji):
   Uređaj nije dopušteno koristiti u sustavima bespilotnih letjelica (UAS) kada radi u frekvencijskom pojasu od 5945 do 6425 MHz u Belgiji (BE), Bugarskoj (BG), Cipru (CY), Češkoj (CZ), Estoniji (EE), Francuskoj (FR), Islandu (IS), Irskoj (IE), Litvi (LT), Njemačkoj (DE), Nizozemskoj (NL), Španjolskoj (ES).

Zjednodušené prohlášení o shodě EU

Společnost ASUSTek Computer Inc. tímto prohlašuje, že toto zařízení splňuje základní požadavky a další příslušná ustanovení směrnice 2014/53/ EU. Plné znění prohlášení o shodě EU je k dispozici na adrese https://www.asus.com/support/.

V zemích uvedených v tabulce je provoz sítě Wi-Fi ve frekvenčním rozsahu 5 150 - 5 350 MHz povolen pouze ve vnitřních prostorech:

a. Zařízení Wi-Fi 6E s nízkým výkonem („LPI"):
   Při provozu ve frekvenčním pásmu 5945 až 6425 MHz je používání tohoto zařízení omezeno pouze na interiér v Belgii (BE), Bulharsku (BG), Kypru (CY), České republice (CZ), Estonsku (EE), Francii (FR), Islandu (IS), Irsku (IE), Litvě (LT), Německu (DE), Nizozemsku (NL), Španělsku (ES).

b. Zařízení Wi-Fi 6E s velmi nízkým výkonem („VLP") (přenosná zařízení):
   Při provozu ve frekvenčním pásmu 5945 až 6425 MHz není povoleno používat toto zařízení v systémech bezpilotních letadel (UAS) v Belgii (BE), Bulharsku (BG), Kypru (CY), České republice (CZ), Estonsku (EE), Francii (FR), Islandu (IS), Irsku (IE), Litvě (LT), Německu (DE), Nizozemsku (NL), Španělsku (ES).

Forenklet EU-overensstemmelseserklæring

ASUSTeK Computer Inc. erklærer hermed at denne enhed er i overensstemmelse med hovedkravene og øvrige relevante bestemmelser i direktivet 2014/53/EU. Hele EU-overensstemmelseserklæringen kan findes på https://www.asus.com/support/.

Wi-Fi, der bruger 5150-5350 MHz skal begrænses til indendørs brug i lande, der er anført i tabellen:

a. Lav strøm indendørs (LPI) Wi-Fi 6E-enheder:
   Enheden må kun bruges indendørs, når den bruges inden for frekvensområdet 5945 til 6425 MHz i Belgien (BE), Bulgarien (BG), Cypern (CY), Tjekkiet (CZ), Estland (EE), Frankrig (FR), Island (IS), Irland (IE), Litauen (LT), Tyskland (DE), Holland (NL), Spanien (ES).

b. Meget lav strøm indendørs (VLP) Wi-Fi 6E-enheder (bærbare enheder):
   Enheden må kun bruges i ubemandede flysystemer (UAS), når den bruges inden for frekvensområdet 5945 til 6425 MHz i Belgien (BE), Bulgarien (BG), Cypern (CY), Tjekkiet (CZ), Estland (EE), Frankrig (FR), Island (IS), Irland (IE), Litauen (LT), Tyskland (DE), Holland (NL), Spanien (ES).

Vereenvoudigd EU-conformiteitsverklaring

ASUSTeK Computer Inc. verklaart hierbij dat dit apparaat voldoet aan de essentiële vereisten en andere relevante bepalingen van Richtlijn 2014/53/ EU. De volledige tekst van de EU-conformiteitsverklaring is beschikbaar op https://www.asus.com/support/.

De WiFi op 5150-5350MHz zal beperkt zijn tot binnengebruik voor in de tabel vermelde landen:

a. LPI (Low Power Indoor=laag vermogen binnenshuis) Wi-Fi 6E-apparaten:
   Het apparaat is beperkt tot enkel binnengebruik bij bedienen in het frequentiebereik van 5945 tot 6425 MHz in België (BE), Bulgarije (BG), Cyprus (CY), Tsjechische Republiek (CZ), Estland (EE), Frankrijk (FR), IJsland (IS), Ierland (IE), Litouwen (LT), Duitsland (DE), Nederland (NL), Spanje (ES).

b. VLP (Very Low Power = zeer laag vermogen) Wi-Fi 6E-apparaten (draagbare apparaten):
   Het apparaat mag niet worden gebruikt in onbemande luchtvaartsystemen (UAS) bij bedienen in het frequentiebereik van 5945 tot 6425 MHz in België (BE), Bulgarije (BG), Cyprus (CY), Tsjechische Republiek (CZ), Estland (EE), Frankrijk (FR), IJsland (IS), Ierland (IE), Litouwen (LT), Duitsland (DE), Nederland (NL), Spanje (ES).

Lihtsustatud EÜ vastavusdeklaratsioon

Käesolevaga kinnitab ASUSTek Computer Inc, et seade vastab direktiivi 2014/53/EÜ olulistele nõuetele ja teistele asjakohastele sätetele. EL vastavusdeklaratsiooni täistekst on saadaval veebisaidil https://www.asus.com/support/.

Sagedusvahemikus 5150-5350 MHz töötava WiFi kasutamine on järgmistes riikides lubatud ainult siseruumides:

a. Madala võimsusega (LPI) Wi-Fi 6E seadmed:
   Sagedusalas 5945 kuni 6425 MHz töötavate seadmete kasutamine on siseruumides piiratud järgmistes riikides: Belgia (BE), Bulgaaria (BG), Küpros (CY), Tšehhi Vabariik (CZ), Eesti (EE), Prantsusmaa (FR), Island (IS), Iirimaa (IE), Leedu (LT), Saksamaa (DE), Holland (NL), Hispaania (ES).

b. Väga madala võimsusega (VLP) Wi-Fi 6E seadmed (kantavad seadmed):
   Sagedusalas 5945 kuni 6425 MHz töötavate seadmete kasutamine on mehitamata õhusõiduteemides (UAS) keelatud järgmistes riikides: Belgia (BE), Bulgaaria (BG), Küpros (CY), Tšehhi Vabariik (CZ), Eesti (EE), Prantsusmaa (FR), Island (IS), Iirimaa (IE), Leedu (LT), Saksamaa (DE), Holland (NL), Hispaania (ES).

Eurooppa - EY:n vaatimustenmukaisuusvakuutus

ASUSTek Computer Inc. ilmoittaa täten, että tämä laite on direktiivin 2014/53/ EU olennaisten vaatimusten ja muiden asiaankuuluvien lisäysten mukainen. Koko EY:n vaatimustenmukaisuusvakuutuksen teksti on luettavissa osoitteessa https://www.asus.com/support/.

5 150 - 5 350 MHz:in taajuudella toimiva WiFi on rajoitettu sisäkäyttöön taulukossa luetelluissa maissa:

a. Pienitehoiset sisäkäyttöön (LPI) Wi-Fi 6E -laitteet:Laite on rajoitettu sisäkäyttöön vain, kun se toimii 5945-6425 MHz taajuusalueella Belgiassa (BE), Bulgariassa (BG), Kyproksella (CY), Tšekin tasavallassa (CZ), Virossa (EE), Ranskassa (FR), Islannissa (IS), Irlannissa (IE), Liettuassa (LT), Saksassa (DE), Alankomaissa (NL), Espanjassa (ES).

b. Erittäin pienitehoiset (VLP) Wi-Fi 6E -laitteet (kannettavat laitteet):
   Laitetta ei saa käyttää miehittämättömissä lentokonejärjestelmissä (UAS) toimittaessa 5945–6425 MHz taajuusalueella Belgiassa (BE), Bulgariassa (BG), Kyproksella (CY), Tšekin tasavallassa (CZ), Virossa (EE), Ranskassa (FR), Islannissa (IS), Irlannissa (IE), Liettuassa (LT), Saksassa (DE), Alankomaissa (NL), Espanjassa (ES).

تبعیت از نسخه ساده شده بیانیه اتحادیه اروپا

ASUSTek Computer Inc در اینجا اعلام می کند که این دستگاه با نیازهای اساسی و سایر مقررات مربوط به بیانیه 2014/53/EU. مطابقت دارد. متن کامل پیروی از این بیانیه اتحادیه اروپا در این آدرس موجود است:
https://www.asus.com/support/.

عملکرد 5150-5350 مگاهرتز برای WiFi باید برای استفاده در فضای داخل ساختمان برای کشورهای فهرست شده در جدول، محدود شود.

a. دستگاه های Wi-Fi 6E با توان برق کم (LPI) در فضای دربسته:
این دستگاه تنها زمانی که در محدوده فرکانس 5945 تا 6425 مگاهرتز در این کشورها استفاده می شود محدود به کارکرد در فضای دربسته است: بلژیک (BE)، بلغارستان (BG)، قبرس (CY)، جمهوری چک (CZ)، استونی (EE)، فرانسه (FR)، ایسلند (IS)، ایرلند (IE)، لیتوانی (LT)، آلمان (DE)، هلند (NL)، اسپانیا (ES).

b. دستگاه های Wi-Fi 6E با توان برق بسیار کم (VLP) (دستگاه های قابل جابجایی):
این دستگاه زمانی که در محدوده فرکانس 5945 تا 6425 مگاهرتز کار می کند مجاز به استفاده در سیستم های هوایی بدون نام (UAS) در این کشورها نیست: بلژیک (BE)، بلغارستان (BG)، قبرس (CY)، جمهوری چک (CZ)، استونی (EE)، فرانسه (FR)، ایسلند (IS)، ایرلند (IE)، لیتوانی (LT)، آلمان (DE)، هلند (NL)، اسپانیا (ES).

Απλοποιημένη Δήλωση Συμμόρφωσης ΕΕ

Διά του παρόντος η ASUSTek Computer Inc. δηλώνει ότι αυτή η συσκευή είναι σύμμορφη με τις βασικές προϋποθέσεις και άλλες σχετικές διατάξεις της Οδηγίας 2014/53/ΕΕ. Το πλήρες κείμενο της δήλωσης συμμόρφωσης της ΕΕ είναι διαθέσιμο στη διεύθυνση https://www.asus.com/support/.

Το WiFi που λειτουργεί στη ζώνη 5150-5350MHz περιορίζεται για χρήση σε εσωτερικούς χώρους για τις χώρες που αναφέρονται στον παρακάτω πίνακα:

a. Συσκευές Wi-Fi 6E χαμηλής ισχύος για εσωτερικούς χώρους (LPI):
   Η συσκευή περιορίζεται σε χρήση σε εσωτερικούς χώρους μόνο όταν λειτουργεί στο εύρος συχνοτήτων 5945 έως 6425 MHz στο Βέλγιο (BE), τη Βουλγαρία (BG), την Κύπρο (CY), την Τσεχική Δημοκρατία (CZ), την Εσθονία (EE), τη Γαλλία (FR), την Ισλανδία (IS), την Ιρλανδία (IE), τη Λιθουανία (LT), τη Γερμανία (DE), την Ολλανδία (NL), την Ισπανία (ES).

b. Συσκευές Wi-Fi 6E πολύ χαμηλής ισχύος (VLP) (φορητές συσκευές):
   Η συσκευή δεν επιτρέπεται να χρησιμοποιείται σε μη επανδρωμένα συστήματα αεροσκαφών (UAS) όταν λειτουργεί στο εύρος συχνοτήτων 5945 έως 6425 MHz στο Βέλγιο (BE), τη Βουλγαρία (BG), την Κύπρο (CY), την Τσεχική Δημοκρατία (CZ), την Εσθονία (EE), τη Γαλλία (FR), την Ισλανδία (IS), την Ιρλανδία (IE), τη Λιθουανία (LT), τη Γερμανία (DE), την Ολλανδία (NL), την Ισπανία (ES).

Appendix

הצהרת התאימות רגולטורית מקוצרת עבור האיחוד האירופי

ASUSTek Computer Inc. מצהירה בזאת כי מכשיר זה תואם לדרישות החיוניות ושאר הסעיפים הרלוונטיים של תקנה 2014/53/EU. ניתן לקרוא את הנוסח המלא של הצהרת התאימות הרגולטורית עבור האיחוד האירופי בכתובת: https://www.asus.com/support/.

יש להגביל רשתות Wi-Fi הפועלות ברצועת התדרים 5150-5350MHz לשימוש בתוך מבנים סגורים בארצות המפורטות ברשימה הבאה:

a. מכשירי Wi-Fi 6E לבית בהספק נמוך (LPI):
המכשיר מוגבל לשימוש פנימי בלבד בשימוש בטווח התדרים 5945 עד 6425MHz בבלגיה (BE), בולגריה (BG), קפריסין (CY), צ'כיה (CZ), אסטוניה (EE), צרפת (FR), איסלנד (IS), אירלנד (IE), איטליה (LT), גרמניה (DE), הולנד (NL), ספרד (ES).

b. מכשירי Wi-Fi 6E בהספק נמוך מאוד (VLP) (מכשירים ניידים):
המכשיר אסור לשימוש במערכות של מטוסים ללא טיס (UAS) בשימוש בטווח התדרים 5945 עד 6425MHz בבלגיה (BE), בולגריה (BG), קפריסין (CY), צ'כיה (CZ), אסטוניה (EE), צרפת (FR), איסלנד (IS), אירלנד (IE), ליטא (LT), גרמניה (DE), הולנד (NL), ספרד (ES).

Egyszerűsített EU megfelelőségi nyilatkozat

Az ASUSTek Computer Inc. ezennel kijelenti, hogy ez az eszköz megfelel az 2014/53/EU sz. irányelv alapvető követelményeinek és egyéb vonatkozó rendelkezéseinek. Az EU megfelelőségi nyilatkozat teljes szövegét a következő weboldalon tekintheti meg: https://www.asus.com/support/.

Az 5150-5350 MHz-es sávban működő Wi-Fi-t beltéri használatra kell korlátozni az alábbi táblázatban felsorolt országokban:

a. Kis fogyasztású beltéri (LPI) Wi-Fi 6E eszközök:
A készülék csak beltéri használatra korlátozódik, ha az 5945-6425 MHz-es frekvenciatartományban működik Belgiumban (BE), Bulgáriában (BG), Cipruson (CY), a Cseh Köztársaságban (CZ), Észtországban (EE), Franciaországban (FR), Izlandon (IS), Írországban (IE), Litvániában (LT), Németországban (DE), Hollandiában (NL), illetve Spanyolországban (ES).

b. Nagyon kis fogyasztású (VLP) Wi-Fi 6E eszközök (hordozható eszközök):
A készülék nem használható pilóta nélküli légi járműveken (UAS) az 5945-6425 MHz-es frekvenciatartományban Belgiumban (BE), Bulgáriában (BG), Cipruson (CY), a Cseh Köztársaságban (CZ), Észtországban (EE), Franciaországban (FR), Izlandon (IS), Írországban (IE), Litvániában (LT), Németországban (DE), Hollandiában (NL), illetve Spanyolországban (ES).

Pernyataan Kesesuaian UE yang Disederhanakan

ASUSTeK Computer Inc. dengan ini menyatakan bahwa perangkat ini memenuhi persyaratan utama dan ketentuan relevan lainnya yang terdapat pada Petunjuk 2014/53/EU. Teks lengkap pernyataan kesesuaian EU tersedia di: https://www.asus.com/support/.

WiFi yang Beroperasi pada 5150-5350 MHz akan terbatas untuk penggunaan dalam ruangan di negara yang tercantum dalam tabel

a. Perangkat Wi-Fi 6E Dalam Ruangan Daya Rendah (LPI):
Perangkat ini dibatasi untuk digunakan di dalam ruangan, hanya jika beroperasi dalam kisaran frekuensi 5945 hingga 6425 MHz di Belgia (BE), Bulgaria (BG), Siprus (CY), Republik Ceko (CZ), Estonia (EE), Prancis (FR), Islandia (IS), Irlandia (IE), Lithuania (LT), Jerman (DE), Belanda (NL), Spanyol (ES).

b. Perangkat Wi-Fi 6E Daya Sangat Rendah (VLP):
Perangkat ini tidak diizinkan untuk digunakan dalam Sistem Pesawat Tanpa Awak (UAS) jika beroperasi dalam kisaran frekuensi 5945 hingga 6425 MHz di Belgia (BE), Bulgaria (BG), Siprus (CY), Republik Ceko (CZ), Estonia (EE), Prancis (FR), Islandia (IS), Irlandia (IE), Lithuania (LT), Jerman (DE), Belanda (NL), Spanyol (ES).

Vienkāršota ES atbilstības paziņojums

ASUSTeK Computer Inc. ar šo paziņo, ka šī ierīce atbilst Direktīvas 2014/53/ES būtiskajām prasībām un citiem citiem saistošajiem nosacījumiem. Pilns ES atbilstības paziņojuma teksts pieejams šeit: https://www.asus.com/support/.

Wi-Fi darbība 5150–5350 MHz ir jāierobežo lietošanai telpās valstīs, kuras norādītas tālāk.

a. Zema enerģijas patēriņa iekštelpu (LPI) Wi-Fi 6E ierīces:
Ierīce ir paredzēta lietošanai telpās tikai tad, ja tā darbojas 5945 līdz 6425 MHz frekvenču diapazonā Beļģijā (BE), Bulgārijā (BG), Kiprā (CY), Čehijā (CZ), Igaunijā (EE), Francijā (FR), Islandē (IS), Īrijā (IE), Lietuvā (LT), Vācijā (DE), Nīderlandē (NL), Spānijā (ES).

b. Ļoti zema enerģijas patēriņa iekštelpu (VLP) Wi-Fi 6E ierīces:
Ierīci nav atļauts izmantot bezpilota gaisa kuģu sistēmās (UAS), ja tā darbojas 5945 līdz 6425 MHz frekvenču diapazonā Beļģijā (BE), Bulgārijā (BG), Kiprā (CY), Čehijā (CZ), Igaunijā (EE), Francijā (FR), Islandē (IS), Īrijā (IE), Lietuvā (LT), Vācijā (DE), Nīderlandē (NL), Spānijā (ES).

Supaprastinta ES atitikties deklaracija

Šiame dokumente bendrovė „ASUSTek Computer Inc." pareiškia, kad šis prietaisas atitinka pagrindinius reikalavimus ir kitas susijusias Direktyvos 2014/53/ES nuostatas. Visas ES atitikties deklaracijos tekstas pateikiamas čia: https://www.asus.com/support/.

Toliau nurodytose šalyse „WiFi" ryšiu, veikiančiu 5 150–5 350 MHz dažnio juostoje, galima naudotis tik patalpose:

a. Mažos galios, patalpose naudojami (angl. Low Power Indoor – LPI) „Wi-Fi" 6E įrenginiai:
Šį įrenginį galima naudoti tik patalpoje, kai jis veikia 5 945–6 425 MHz dažnių diapazone Belgijoje (BE), Bulgarijoje (BG), Kipre (CY), Čekijoje (CZ), Estijoje (EE), Prancūzijoje (FR), Islandijoje (IS), Airijoje (IE), Lietuvoje (LT), Vokietijoje (DE), Nyderlanduose (NL), Ispanijoje (ES).

b. Labai mažos, patalpose naudojami (angl. Very Low Power – VLP) „Wi-Fi" 6E įrenginiai (nešiojamieji įrenginiai):
Šio įrenginio neleidžiama naudoti bepiločių orlaivių sistemose (UAS), kai jis veikia 5 945–6 425 MHz dažnių diapazone Belgijoje (BE), Bulgarijoje (BG), Kipre (CY), Čekijoje (CZ), Estijoje (EE), Prancūzijoje (FR), Islandijoje (IS), Airijoje (IE), Lietuvoje (LT), Vokietijoje (DE), Nyderlanduose (NL), Ispanijoje (ES).

Forenklet EU-samsvarserklæring

ASUSTek Computer Inc. erklærer herved at denne enheten er i samsvar med hovedsaklige krav og andre relevante forskrifter i direktivet 2014/53/EU. Fullstendig tekst for EU-samsvarserklæringen finnes på: https://www.asus.com/support/.

Wi-Fi-området 5150–5350 MHz skal begrenses til innendørs bruk for landene som er oppført i tabellen:

a. Lavstrøms innendørs (LPI) Wi-Fi 6E-enheter:
Enheten er begrenset til kun innendørs bruk når den brukes i frekvensområdet 5945 til 6425 MHz i Belgia (BE), Bulgaria (BG), Kypros (CY), Tsjekkia (CZ), Estland (EE), Frankrike (FR), Island (IS), Irland (IE), Litauen (LT), Tyskland (DE), Nederland (NL) og Spania (ES).

b. Veldig lavstrøms (VLP) Wi-Fi 6E-enheter (bærbare enheter):
Enheten får ikke brukes på ubemannede flysystemer (UAS) når den brukes i frekvensområdet 5945 til 6425 MHz i Belgia (BE), Bulgaria (BG), Kypros (CY), Tsjekkia (CZ), Estland (EE), Frankrike (FR), Island (IS), Irland (IE), Litauen (LT), Tyskland (DE), Nederland (NL) og Spania (ES).

Uproszczona deklaracja zgodności UE

Firma ASUSTek Computer Inc. niniejszym oświadcza, że urządzenie to jest zgodne z zasadniczymi wymogami i innymi właściwymi postanowieniami dyrektywy 2014/53/EU. Pełny tekst deklaracji zgodności UE jest dostępny pod adresem https://www.asus.com/support/.

W krajach wymienionych w tabeli działanie sieci Wi-Fi w paśmie 5150–5350 MHz powinno być ograniczone wyłącznie do pomieszczeń:

a. Urządzenia Wi-Fi 6E o niskim poziomie mocy w pomieszczeniach (LPI):
W Belgii (BE), Bułgarii (BG), Cyprze (CY), Czechach (CZ), Estonii (EE), Francji (FR), Islandii (IS), Irlandii (IE), Litwie (LT), Niemczech (DE), Holandii (NL) i Hiszpanii (ES) działanie urządzenia w zakresie częstotliwości od 5945 do 6425 MHz jest ograniczone do użytku wewnątrz pomieszczeń.

b. Urządzenia Wi-Fi 6E o bardzo niskim poziomie mocy (VLP) (urządzenia przenośne):
W Belgii (BE), Bułgarii (BG), Cyprze (CY), Czechach (CZ), Estonii (EE), Francji (FR), Islandii (IS), Irlandii (IE), Litwie (LT), Niemczech (DE), Holandii (NL) i Hiszpanii (ES) urządzenie działające w zakresie częstotliwości od 5945 do 6425 MHz nie może być używane w bezzałogowych systemach latających (UAS).

Declaração de Conformidade Simplificada da UE

A ASUSTek Computer Inc. declara que este dispositivo está em conformidade com os requisitos essenciais e outras disposições relevantes da Diretiva 2014/53/UE. O texto integral da declaração de conformidade da UE está disponível em https://www.asus.com/support/.

A utilização das frequências WiFi de 5150 a 5350MHz está restrita a ambientes interiores nos países apresentados na tabela:

a. Dispositivos Wi-Fi 6E de interior de baixa potência (LPI):
O dispositivo restringe-se à utilização em locais interiores apenas quando funcionar na gama de frequências de 5945 a 6425 MHz na Bélgica (BE), Bulgária (BG), Chipre (CY), República Checa (CZ), Estónia (EE), França (FR), Islândia (IS), Irlanda (IE), Lituânia (LT), Alemanha (DE), Países Baixos (NL), Espanha (ES).

b. Dispositivos Wi-Fi 6E de muito baixa potência (VLP) (dispositivos portáteis):
Não é permitida a utilização do dispositivo em veículos aéreos não tripulados (UAS) quando o mesmo funcionar na gama de frequências de 5945 a 6425 MHz na Bélgica (BE), Bulgária (BG), Chipre (CY), República Checa (CZ), Estónia (EE), França (FR), Islândia (IS), Irlanda (IE), Lituânia (LT), Alemanha (DE), Países Baixos (NL), Espanha (ES).

Declarație de conformitate UE, versiune simplificată
Prin prezenta, ASUSTek Computer Inc. declară că acest dispozitiv este în conformitate cu reglementările esențiale și cu celelalte prevederi relevante ale Directivei 2014/53/UE. Textul complet al declarației de conformitate UE este disponibil la adresa https://www.asus.com/support/.

Pentru țările listate în tabelul de mai jos, rețelele WiFi care funcționează în banda de frecvență de 5.150-5.350 MHz trebuie utilizate doar în interior:

a. Dispozitive Wi-Fi 6E cu consum redus de energie pentru interior (LPI): Dispozitivul este restricționat pentru utilizare exclusivă în interior atunci când funcționează în gama de frecvențe de la 5945 la 6425 MHz în Belgia (BE), Bulgaria (BG), Cipru (CY), Republica Cehă (CZ), Estonia (EE), Franța (FR), Islanda (IS), Irlanda (IE), Lituania (LT), Germania (DE), Țările de Jos (NL), Spania (ES).

b. Dispozitive Wi-Fi 6E de foarte mică putere (VLP) (dispozitive portabile): Nu este permisă utilizarea dispozitivului pe sisteme de aeronave fără pilot la bord (UAS) atunci când funcționează în gama de frecvențe 5945-6425 MHz în Belgia (BE), Bulgaria (BG), Cipru (CY), Republica Cehă (CZ), Estonia (EE), Franța (FR), Islanda (IS), Irlanda (IE), Lituania (LT), Germania (DE), Țările de Jos (NL), Spania (ES).

Pojednostavljena Deklaracija o usaglašenosti EU
ASUSTek Computer Inc. ovim izjavljuje da je ovaj uređaj usaglašen sa osnovnim zahtevima i drugim relevantnim odredbama Direktive 2014/53/EU. Ceo tekst Deklaracije o usaglašenosti EU dostupan je na lokaciji https://www.asus.com/support/.

WiFi koji radi u frekventnom opsegu od 5150 MHz do 5350 MHz ograničen je isključivo na upotrebu u zatvorenom prostoru za zemlje navedene u tabeli ispod:

a. Wi-Fi 6E uređaji s niskom potrošnjom za zatvoren prostor (LPI): Ovaj uređaj je ograničen na upotrebu samo u zatvorenom prostoru kada radi u frekventnom opsegu od 5945 do 6425 MHz u Belgiji (BE), Bugarskoj (BG), Kipru (CY), Češkoj Republici (CZ), Estoniji (EE), Francuskoj (FR), Islandu (IS), Irskoj (IE), Litvaniji (LT), Nemačkoj (DE), Holandiji (NL), Španiji (ES).

b. Wi-Fi 6E uređaji s veoma niskom potrošnjom (VLP) (prenosivi uređaji): Nije dozvoljeno da se ovaj uređaj koristi na sistemima bespilotnih letelica (UAS) kada radi u frekventnom opsegu od 5945 do 6425 MHz u Belgiji (BE), Bugarskoj (BG), Kipru (CY), Češkoj Republici (CZ), Estoniji (EE), Francuskoj (FR), Islandu (IS), Irskoj (IE), Litvaniji (LT), Nemačkoj (DE), Holandiji (NL), Španiji (ES).

Zjednodušené vyhlásenie o zhode platné pre EÚ
Spoločnosť ASUSTek Computer Inc. týmto vyhlasuje, že toto zariadenie je v súlade so základnými požiadavkami a ďalšími príslušnými ustanoveniami smernice č. 2014/53/EÚ. Plné znenie vyhlásenia o zhode pre EÚ je k dispozícii na lokalite https://www.asus.com/support/.

Činnosť WiFi v pásme 5150 - 5350 MHz bude obmedzená na použitie vo vnútornom prostredí pre krajiny uvedené v tabulke nižšie:

a. Zariadenia s Wi-Fi 6E s nízkym výkonom určené do vnútorného prostredia (LPI): Toto zariadenie je obmedzené len na použitie vo vnútornom prostredí pri prevádzke vo frekvenčnom pásme 5945 až 6425 MHz v Belgicku (BE), Bulharsku (BG), na Cypre (CY), v Českej republike (CZ), Estónsku (EE), vo Francúzsku (FR), na Islande (IS), v Írsku (IE), Litve (LT), Nemecku (DE), Holandsku (NL), Španielsku (ES).

b. Zariadenia s Wi-Fi 6E s veľmi nízkym výkonom (VLP) (prenosné zariadenia): Toto zariadenie sa nesmie používať v bezpilotných leteckých systémoch (UAS) pri prevádzke vo frekvenčnom pásme 5945 až 6425 MHz v Belgicku (BE), Bulharsku (BG), na Cypre (CY), v Českej republike (CZ), Estónsku (EE), vo Francúzsku (FR), na Islande (IS), v Írsku (IE), Litve (LT), Nemecku (DE), Holandsku (NL), Španielsku (ES).

Poenostavljena izjava EU o skladnosti
ASUSTek Computer Inc. tukaj izjavlja, da je ta naprava skladna s temeljnimi zahtevami in drugimi relevantnimi določili Direktive 2014/53/EU. Polno besedilo izjave EU o skladnosti je na voljo na https://www.asus.com/support/.

WiFi, ki deluje v pasovnem območju 5150–5350 MHz, mora biti v državah, navedenih v spodnjem seznamu, omejen na notranjo uporabo:

a. Notranje naprave z nizko močjo (LPI) Wi-Fi 6E: Naprava je omejena na uporabo v zaprtih prostorih, kadar deluje v frekvenčnem območju 5945 do 6425 MHz v Belgiji (BE), Bolgariji (BG), na Cipru (CY), Češkem (CZ), v Estoniji (EE), Franciji (FR), na Islandiji (IS), Irskem (IE), v Litvi (LT), Nemčiji (DE), na Nizozemskem (NL), v Španiji (ES).

b. Naprave z zelo nizko močjo (VLP) Wi-Fi 6E (prenosne naprave): Naprave ni dovoljeno uporabljati v sistemih brezpilotnih zrakoplovov (UAS), kadar delujejo v frekvenčnem območju 5945 do 6425 MHz v Belgiji (BE), Bolgariji (BG), na Cipru (CY), Češkem (CZ), v Estoniji (EE), Franciji (FR), na Islandiji (IS), Irskem (IE), v Litvi (LT), Nemčiji (DE), na Nizozemskem (NL), v Španiji (ES).

Declaración de conformidad simplificada para la UE
Por la presente, ASUSTek Computer Inc. declara que este dispositivo cumple los requisitos básicos y otras disposiciones pertinentes de la directiva 2014/53/EU. En https://www.asus.com/support/ está disponible el texto completo de la declaración de conformidad para la UE.

La conexión WiFi con una frecuencia de funcionamiento de 5150-5350 MHz se restringirá al uso en interiores para los países enumerados en la tabla:

a. Dispositivos con Wi-Fi 6E de baja potencia para interiores (LPI): El dispositivo está restringido al uso en interiores únicamente cuando funciona en el intervalo de frecuencias de 5945 a 6425 MHz en Bélgica (BE), Bulgaria (BG), Chipre (CY), República Checa (CZ), Estonia (EE), Francia (FR), Islandia (IS), Irlanda (IE), Lituania (LT), Alemania (DE), Países Bajos (NL) y España (ES).

b. Dispositivos con Wi-Fi 6E de muy baja potencia (VLP) (dispositivos portátiles): No está permitido usar el dispositivo en sistemas de aeronaves no tripuladas cuando funciona en el intervalo de frecuencias de 5945 a 6425 MHz en Bélgica (BE), Bulgaria (BG), Chipre (CY), República Checa (CZ), Estonia (EE), Francia (FR), Islandia (IS), Irlanda (IE), Lituania (LT), Alemania (DE), Países Bajos (NL) y España (ES).

Förenklad EU-försäkran om överensstämmelse
ASUSTek Computer Inc. deklarerar härmed att denna enhet överensstämmer med de grundläggande kraven och andra relevanta bestämmelser i direktiv 2014/53/EU. Fullständig text av EU-försäkran om överensstämmelse finns på https://www.asus.com/support/.

WiFi som använder 5150-5350 MHz kommer att begränsas för användning inomhus i de länder som anges i tabellen:

a. Wi-Fi 6E-enheter med låg effekt inomhus (LPI): Enheten är begränsad till användning inomhus enbart när den använder 5 945 till 6 425 MHz frekvensband i Belgien (BE), Bulgarien (BG), Cypern (CY), Tjeckien (CZ), Estland (EE), Frankrike (FR), Island (IS), Irland (IE), Litauen (LT), Tyskland (DE), Nederländerna (NL), Spanien (ES).

b. Wi-Fi 6E-enheter med mycket låg effekt (VLP) (bärbara enheter): Enheten får inte användas på obemannade luftfartyg (UAS) när den använder 5 945 till 6 425 MHz frekvensband i Belgien (BE), Bulgarien (BG), Cypern (CY), Tjeckien (CZ), Estland (EE), Frankrike (FR), Island (IS), Irland (IE), Litauen (LT), Tyskland (DE), Nederländerna (NL), Spanien (ES).

ประกาศเกี่ยวกับความสอดคล้องของสหภาพยุโรปแบบย่อ
ASUSTek Computer Inc. ขอประกาศในที่นี้ว่าอุปกรณ์นี้มีความสอดคล้องกับความ
ต้องการที่จำเป็นและเงื่อนไขที่เกี่ยวข้องอื่น ๆ ของบทบัญญัติข้อกำหนด 2014/53/EU เนื้อหาที่สมบูรณ์ของประกาศความสอดคล้องกับ EU มีอยู่ที่ https://www.asus.com/support/

การทำงานของ WiFi ที่ 5150-5350MHz ถูกจำกัดให้ใช้ในอาคารสำหรับประเทศที่แสดงในตาราง

a. อุปกรณ์ในอาคารพลังงานต่ำ (LPI) Wi-Fi 6E: อุปกรณ์นี้จำกัดให้ใช้เฉพาะภายในอาคารเท่านั้น เมื่อใช้งานที่ช่วงความถี่ 5945 ถึง 6425 MHz ในเบลเยี่ยม (BE), บัลแกเรีย (BG), ไซปรัส (CY), สาธารณรัฐเช็ก (CZ), เอสโทเนีย (EE), ฝรั่งเศส (FR), ไอซ์แลนด์ (IS), ไอร์แลนด์ (IE), ลิธัวเนีย (LT), เยอรมนี (DE), เนเธอร์แลนด์ (NL), สเปน (ES)

b. อุปกรณ์พลังงานต่ำมาก (VLP) Wi-Fi 6E (อุปกรณ์พกพา): ไม่อนุญาตให้ใช้อุปกรณ์นี้กับระบบอากาศยานไร้คนขับ (UAS) เมื่อใช้งานที่ช่วงความถี่ 5945 ถึง 6425 MHz ในเบลเยี่ยม (BE), บัลแกเรีย (BG), ไซปรัส (CY), สาธารณรัฐเช็ก (CZ), เอสโทเนีย (EE), ฝรั่งเศส (FR), ไอซ์แลนด์ (IS), ไอร์แลนด์ (IE), ลิธัวเนีย (LT), เยอรมนี (DE), เนเธอร์แลนด์ (NL), สเปน (ES)

Basitleştirilmiş AB Uyumluluk Bildirimi
ASUSTek Computer Inc., bu aygıtın 2014/53/EU Yönergesinin temel gereksinimlerine ve diğer ilgili hükümlerine uygun olduğunu bildirir. AB uygunluk bildiriminin tam metni şu adreste bulunabilir: https://www.asus.com/support/.

5150-5350 MHz arasındaki WiFi çalışması, tabloda listelenen ülkeler için iç mekân kullanımıyla kısıtlanacaktır.

a. Düşük Güç İç Mekan (LPI) Wi-Fi 6E cihazları: Belçika (BE), Bulgaristan (BG), Kıbrıs (CY), Çek Cumhuriyeti (CZ), Estonya (EE), Fransa (FR), İzlanda (IS), İrlanda (IE), Litvanya (LT), Almanya (DE), Hollanda (NL), İspanya (ES)'da 5945 ila 6425 Mhz frekans aralığında çalışırken cihaz yalnızca iç mekanda kullanım ile sınırlandırılmıştır.

b. Çok Düşük Güç (VLP) Wi-Fi 6E cihazları (taşınabilir cihazlar): Belçika (BE), Bulgaristan (BG), Kıbrıs (CY), Çek Cumhuriyeti (CZ), Estonya (EE), Fransa (FR), İzlanda (IS), İrlanda (IE), Litvanya (LT), Almanya (DE), Hollanda (NL), İspanya (ES)'da 5945 ila 6425 Mhz frekans aralığında çalışırken cihazın İnsansız Hava Aracı Sistemleri (UAS)'ta kullanımı izinli değildir.

Спрощена декларація про відповідність нормам ЄС

ASUSTek Computer Inc. заявляє, що цей пристрій відповідає основним вимогам та іншим відповідним вимогам Директиви 2014 / 53 / EU. Повний текст декларації відповідності нормам ЄС доступний на https://www.asus.com/support/.

Робота Wi-Fi на частоті 5150-5350 МГц обмежується використанням у приміщенні для країн, поданих у таблиці нижче:

a. Пристрої низької потужності для приміщень (LPI) Wi-Fi 6E:
Використання пристрою обмежено лише приміщенням із діапазоном частот від 5945 МГц до 6425 МГц у Бельгії (BE), Болгарії (BG), на Кіпрі (CY), у Чеській Республіці (CZ), Естонії (EE), Франції (FR), Ісландії (IS), Ірландії (IE), Литві (LT), Німеччині (DE), Нідерландах (NL), Іспанії (ES).

b. Пристрої дуже низької потужності (VLP) Wi-Fi 6E (портативні пристрої):
Використання пристрою не дозволено на безпілотних літальних апаратах (UAS) із діапазоном частот від 5945 МГц до 6425 МГц у Бельгії (BE), Болгарії (BG), на Кіпрі (CY), у Чеській Республіці (CZ), Естонії (EE), Франції (FR), Ісландії (IS), Ірландії (IE), Литві (LT), Німеччині (DE), Нідерландах (NL), Іспанії (ES).

AT	BE	BG	CZ	DK	EE	FR
DE	IS	IE	IT	EL	ES	CY
LV	LI	LT	LU	HU	MT	NL
NO	PL	PT	RO	SI	SK	TR
FI	SE	CH	HR	UK(NI)		

CE RED RF Output table (Directive 2014/53/EU)

WI-FI 6E AX211NGW (Model: AX211NGW):

Function	Frequency	Maximum Output Power (EIRP)
WiFi	2412 - 2472 MHz	19 dBm
	5150 - 5350 MHz	20 dBm
	5470 - 5725 MHz	21 dBm
	5725 - 5850 MHz	12 dBm
	5945 - 6425 MHz	17 dBm
Bluetooth	2402 - 2480 MHz	12 dBm

* Receiver category 1

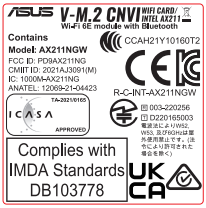

Appendix

Warranty

EN: ASUS Guarantee Information

- ASUS offers a voluntary manufacturer's Commercial Guarantee.
- ASUS reserves the right to interpret the provisions of the ASUS Commercial Guarantee.
- This ASUS Commercial Guarantee is provided independently and in addition to the statutory Legal Guarantee and in no way affects or limits the rights under the Legal Guarantee.

For all the guarantee information, please visit https://www.asus.com/support.

F: Garantie ASUS

- ASUS fournit une garantie commerciale en tant que garantie volontaire du fabricant.
- ASUS se réserve le droit d'interpréter et de clarifier les informations relatives à la garantie commerciale ASUS.
- Cette garantie commerciale ASUS est fournie indépendamment et parallèlement à la garantie légale, elle n'affecte ou ne limite d'aucune façon les droits acquis par la garantie légale.

Pour plus d'informations sur la garantie, consultez le site https://www.asus.com/fr/support/.

G: ASUS Garantieinformationen

- ASUS bietet eine freiwillige Warengarantie des Herstellers an.
- ASUS behält sich das Recht zur Auslegung der Bestimmungen in der ASUS Warengarantie vor.
- Diese ASUS Warengarantie wird unabhängig und zusätzlich zur rechtmäßigen gesetzlichen Garantie gewährt und beeinträchtigt oder beschränkt in keiner Weise die Rechte aus der gesetzlichen Garantie.

Die vollständigen Garantieinformationen finden Sie unter https://www.asus.com/de/support/.

I: Informativa sulla Garanzia ASUS

- ASUS offre una Garanzia Commerciale volontaria del produttore.
- ASUS si riserva il diritto di interpretare le disposizioni della Garanzia Commerciale ASUS.
- La presente Garanzia Commerciale ASUS viene fornita in modo indipendente e in aggiunta alla Garanzia Legale prevista per legge e non pregiudica o limita in alcun modo i diritti previsti dalla Garanzia Legale.

Per tutte le informazioni sulla garanzia, visitare https://www.asus.com/it/support.

R: Информация о гарантии ASUS

- ASUS предлагает добровольную гарантию от производителя.
- ASUS оставляет за собой право интерпретирование положений гарантии ASUS.
- Настоящая гарантия ASUS никоим образом не ограничивает Ваши права, предусмотренные локальным законодательством.

Для получения полной информации о гарантии посетите https://www.asus.com/ru/support/.

DA: ASUS garantioplysninger

- ASUS tilbyder en valgfri handelsmæssig garanti.
- ASUS forbeholder sig retten til at fortolke bestemmelserne i ASUS' handelsmæssige garanti.
- Denne handelsmæssige garanti fra ASUS tilbydes uafhængigt, som en tilføjelse til den lovbestemte juridiske garanti og den påvirker eller begrænser på ingen måde rettighederne i den juridiske garanti.

Alle garantioplysningerne kan findes på https://www.asus.com/dk/support/.

BG: Информация за гаранцията от ASUS

- ASUS предлага доброволна търговска гаранция от производителя.
- ASUS си запазва правото да тълкува условията на търговската гаранция на ASUS.
- Тази търговска гаранция на ASUS се предлага независимо от и в допълнение на законовата гаранция. Тя по никакъв начин не оказва влияние върху правата на потребителя в законовата гаранция и по никакъв начин не ги ограничава.

За цялостна информация относно гаранцията, моля, посетете https://www.asus.com/support.

CZ: Informace o záruce společnosti ASUS

- Společnost ASUS nabízí dobrovolnou komerční záruku výrobce.
- Společnost ASUS si vyhrazuje právo vykládat ustanovení komerční záruky společnosti ASUS.
- Tato komerční záruka společnosti ASUS je poskytována nezávisle a jako doplněk zákonné záruky a žádným způsobem neovlivňuje ani neomezuje práva vyplývající ze zákonné záruky.

Všechny informace o záruce najdete na adrese https://www.asus.com/cz/support/.

CR: Informacije o ASUS jamstvu

- ASUS dragovoljno nudi komercijalno proizvođačko jamstvo.
- ASUS zadržava prava na tumačenje odredbi ASUS komercijalnog jamstva.
- Ovo ASUS komercijalno jamstvo daje se neovisno i kao dodatak zakonskom jamstvu i ni na koji način ne ograničuje prava iz okvira zakonskog jamstva.

Sve informacije o jamstvu potražite na https://www.asus.com/support.

DU: ASUS-garantie-informatie

- SUS biedt een vrijwillige commerciële garantie van de fabrikant.
- ASUS behoudt zich het recht voor om de bepalingen van de commerciële garantie van ASUS uit te leggen.
- Deze commerciële garantie van ASUS wordt onafhankelijk en als aanvulling op de statutaire Wettelijke garantie geboden en beïnvloedt of beperkt in geen geval de rechten onder de wettelijke garantie.

Voor alle informatie over de garantie, gaat u naar https://www.asus.com/nl/support/.

EE: Teave ASUS-e garantii kohta

- ASUS pakub vabatahtlikku tasulist tootjagarantiid.
- ASUS jätab endale õiguse tõlgendada ASUS-e tasulise garantii tingimusi.
- See ASUS-e tasuline garantii on sõltumatu lisagarantii seadusega kehtestatud garantiile ega mõjuta mingil määral seadusega kehtestatud garantiid ning seadusega kehtestatud garantii piiranguid.

Vaadake garantiiga seotud teavet veebisaidilt https://www.asus.com/ee/.

GK: Πληροφορίες εγγύησης ASUS

- Η ASUS προσφέρει μια εθελοντική Εμπορική εγγύηση κατασκευαστή.
- Η ASUS διατηρεί το δικαίωμα ερμηνείας των διατάξεων της Εμπορικής εγγύησης ASUS.
- Αυτή η Εμπορική εγγύηση ASUS παρέχεται ανεξάρτητα και επιπροσθέτως της θεσμικής Νομικής εγγύησης και σε καμία περίπτωση δεν επηρεάζει ή περιορίζει τα δικαιώματα βάσει της Νομικής εγγύησης.

Για όλες τις πληροφορίες εγγύησης, επισκεφθείτε τη διεύθυνση https://www.asus.com/gr-el/.

HUG: ASUS garanciális információk

- Az ASUS önkéntes gyártói kereskedelmi garanciát kínál.
- Az ASUS fenntartja magának a jogot, hogy értelmezze az ASUS kereskedelmi garanciára vonatkozó rendelkezéseket.
- Ezt a kereskedelmi garanciát az ASUS függetlenül és a törvényes garancia mellett nyújtja és semmilyen módon nem befolyásolja, vagy korlátozza a jogi garancia nyújtotta jogokat.

A garanciára vonatkozó teljes körű információkért látogasson el a https://www.asus.com/hu/support/ oldalra.

LV: ASUS garantijas informācija

- ASUS piedāvā brīvprātīgu ražotāja komerciālo garantiju.
- ASUS patur tiesības interpretēt ASUS komerciālās garantijas noteikumus.
- Šī ASUS komerciālā garantija tiek piedāvāta neatkarīgi un papildus likumā noteiktajai juridiskajai garantijai, un tā nekādi neietekmē vai neierobežo juridiskajā garantijā noteiktās tiesības.

Lai iegūtu informāciju par garantiju, apmeklējiet vietni https://www.asus.com/lv/.

LT: Informacija apie ASUS garantiją

- ASUS siūlo savanorišką komercinę gamintojo garantiją.
- ASUS pasilieka teisę savo nuožiūra aiškinti šios komercinės ASUS garantijos nuostatas.
- Ši komercinė ASUS garantija suteikiama nepriklausoma, be įstatyminės teisinės garantijos, ir jokiu būdu nepaveikia ar neapriboja teisinės garantijos suteikiamų teisių.

Norėdami gauti visą informaciją apie garantiją, apsilankykite https://www.asus.com/lt/.

PL: Informacje o gwarancji firmy ASUS

- Firma ASUS oferuje dobrowolną gwarancję handlową producenta.
- Firma ASUS zastrzega sobie prawo do interpretacji warunków gwarancji handlowej firmy ASUS.
- Niniejsza gwarancja handlowa firmy ASUS jest udzielana niezależnie, jako dodatek do wymaganej ustawowo gwarancji prawnej i w żaden sposób nie wpływa na prawa przysługujące na mocy gwarancji prawnej ani ich nie ogranicza.

Wszelkie informacje na temat gwarancji można znaleźć na stronie https://www.asus.com/pl/support.

PG: Informações de Garantia ASUS

- A ASUS oferece uma Garantia Comercial voluntária do fabricante.
- A ASUS reserva o direito de interpretar as disposições da Garantia Comercial da ASUS.
- Esta Garantia Comercial da ASUS é fornecida de forma independente além da Garantia Legal estatutária e não afeta nem limita de qualquer forma os direitos estabelecidos na Garantia Legal.

Para consultar todas as informações sobre a garantia, visite https://www.asus.com/pt/support/.

RO: Informații despre garanția ASUS

- ASUS oferă o garanție comercială voluntară a producătorului.
- ASUS își rezervă dreptul de a interpreta prevederile garanției comerciale ASUS.
- Această garanție comercială ASUS este oferită independent și în plus față de garanția obligatorie legal și nu afectează sau limitează în niciun fel drepturile acordate conform garanției legale.

Pentru toate informațiile legate de garanție, vizitați https://www.asus.com/ro/support.

SL: Informacije o garanciji ASUS

- ASUS ponuja prostovoljno tržno garancijo proizvajalca.
- ASUS si pridržuje pravico do razlage določb tržne garancije družbe ASUS.
- Ta tržna garancija družbe ASUS je na voljo neodvisno in kot dodatek zakonsko predpisani pravni garanciji ter na noben način ne vpliva na pravice, ki jih zagotavlja pravna garancija, oziroma jih omejuje.

Vse informacije o garanciji najdete na spletnem mestu https://www.asus.com/support.

SK: Informácie o záruke ASUS

- ASUS ponúka dobrovoľnú obchodnú záruku výrobcu.
- ASUS si vyhradzuje právo interpretovať ustanovenia obchodnej záruky ASUS.
- Táto obchodná záruka ASUS je poskytnutá nezávisle a navyše k zákonnej záruke a v žiadnom prípade neovplyvňuje ani neobmedzuje tieto práva podľa tejto zákonnej záruky.

Všetky ďalšie informácie o záruke nájdete na https://www.asus.com/sk/support.

ES: Información de garantía de ASUS

- ASUS ofrece una garantía comercial voluntaria del fabricante.
- ASUS se reserva el derecho de interpretar las disposiciones de esta garantía comercial de ASUS.
- Esta garantía comercial de ASUS se proporciona de forma independiente y adicional a la garantía estatutaria y de ninguna manera afecta a los derechos bajo la garantía legal ni los limita.

Para obtener toda la información sobre la garantía, visite https://www.asus.com/ES/support/.

TR: ASUS Garanti Bilgileri

- ASUS, gönüllü olarak üretici Ticari Garantisi sunar.
- ASUS, ASUS Ticari Garantisinin hükümlerini yorumlama hakkını saklı tutar.
- Bu ASUS Ticari Garantisi, bağımsız olarak ve hukuki Yasal Garanti'ye ek olarak sağlanır ve hiçbir şekilde Yasal Garanti kapsamındaki hakları etkilemez veya sınırlandırmaz.

Tüm garanti bilgileri için lütfen https://www.asus.com/tr/support adresini ziyaret edin.

FI: ASUS-takuutiedot

- ASUS tarjoaa vapaaehtoisen valmistajan kaupallisen takuun.
- ASUS pidättää oikeuden tulkita ASUS-kaupallisen takuun ehdot.
- Tämä ASUS-kaupallinen takuu tarjotaan itsenäisesti lakisääteisen oikeudellisen takuun lisäksi eikä se vaikuta millään tavoin laillisen takuun oikeuksiin tai rajoita niitä.

Saadaksesi kaikki takuutiedot, siirry osoitteeseen https://www.asus.com/fi/support.

NW: Informasjon om ASUS-garanti

- ASUS tilbyr som produsent en frivillig kommersiell garanti.
- ASUS forbeholder seg retten til å tolke bestemmelsene i ASUS sin kommersielle garanti.
- ASUS sin kommersielle garanti gis uavhengig og i tillegg til den lovbestemte juridiske garantien, og verken påvirker eller begrenser rettighetene under den juridiske garantien på noen måte.

Du finner fullstendig informasjon om garanti på https://www.asus.com/no/support/.

SB: Informacije o ASUS garanciji

- ASUS nudi dobrovoljnu proizvođačku komercijalnu garanciju.
- ASUS zadržava pravo da tumači odredbe svoje ASUS komercijalne garancije.
- Ova ASUS komercijalna garancija daje se nezavisno, kao dodatak zakonskoj pravnoj garanciji, i ni ka koji način ne utiče na i ne ograničava prava data pravnom garancijom.

Za sve informacije o garanciji, posetite https://www.asus.com/support/.

SW: ASUS garantiinformation

- ASUS erbjuder en frivillig kommersiell tillverkningsgaranti.
- ASUS förbehåller sig rätten att tolka bestämmelserna i ASUS kommersiella garanti.
- Denna kommersiella garanti från ASUS tillhandahålles separat och som tillägg till den lagstadgade garantin, och påverkar eller begränsar på intet sätts rättigheterna under den lagstadgade garantin.

För all garantiinformation, besök https://www.asus.com/se/support/.

UA: Інформація про Гарантію ASUS

- ASUS пропонує добровільну Комерційну Гарантію виробника.
- ASUS застерігає за собою право тлумачити положення Комерційної Гарантії ASUS
- Цю Комерційну Гарантію надано незалежно і на додаток до обов'язкової Законної Гарантії; вона жодним чином не впливає на права за Законною Гарантією і не обмежує їх.

Всю інформацію про гарантію подано тут: https://www.asus.com/ua/support.

MX: Garantía y Soporte

Esta Garantía aplica en el país de compra. Usted acepta que en esta garantía:

- Los procedimientos de servicio pueden variar en función del país.
- Algunos servicios y/o piezas de reemplazo pudieran no estar disponibles en todos los países.
- Algunos países pueden tener tarifas y restricciones que se apliquen en el momento de realizar el servicio, visite el sitio de soporte de ASUS en https://www.asus.com/mx/support/ para ver más detalles.
- Si tiene alguna queja o necesidad de un centro de reparación local o el periodo de garantía del producto ASUS, por favor visite el sitio de Soporte de ASUS en https://www.asus.com/mx/support/ para mayores detalles.

Información de contacto ASUS
Esta garantía está respaldada por:
ASUSTeK Computer Inc.
Centro de Atención ASUS +52 (55) 1946-3663

BP: Informações de garantia ASUS

Esta garantia aplica-se ao período definido pela garantia legal (90 dias) mais o período de garantia comercial oferecido pela ASUS. Por exemplo: 12M significa 12 meses de garantia no total (3 meses de garantia legal mais 9 meses de garantia contratual), 24 meses significa 24 meses de garantia no total (3 meses de garantia legal mais 21 meses de garantia contratual) e 36 meses significa 36 meses de garantia no total (3 meses de garantia legal e 33 de garantia contratual) a contar da data da garantia declarada (Data de Início da Garantia).

Para todas as informações de garantia, visite https://www.asus.com/br/support/.

ID: Informasi Garansi ASUS

Garansi ini berlaku di negara tempat pembelian.

Periode Garansi tertera pada kemasan/kotak dari Produk dan Masa Garansi dimulai sejak tanggal pembelian Produk ASUS dengan kondisi baru.

Silahkan pindai Kode QR di bagian bawah halaman terakhir untuk Kartu Garansi versi Web dalam format PDF untuk lebih informasi jelas mengenai jaminan garansi Produk ASUS.

- Informasi Dukungan ASUS, silakan kunjungi https://www.asus.com/id/support.
- Informasi Lokasi Layanan, silakan kunjungi https://www.asus.com/id/support/Service-Center/Indonesia.
- Layanan Call Center: 1500128

VI: Thông tin đảm bảo của ASUS

- ASUS cung cấp Bảo hành thương mại tự nguyện của nhà sản xuất.
- ASUS bảo lưu quyền giải thích các điều khoản của Bảo hành thương mại của ASUS.
- Bảo hành thương mại này của ASUS được cung cấp độc lập và ngoài Bảo đảm pháp lý theo luật định và không có cách nào ảnh hưởng đến hoặc giới hạn các quyền theo Bảo lãnh pháp lý.

Để biết tất cả các thông tin bảo hành, vui lòng truy cập https://www.asus.com/vn/support.

Appendix

ASUS contact information

ASUSTeK COMPUTER INC.
Address: 1F., No. 15, Lide Rd., Beitou Dist., Taipei City 112

ASUS COMPUTER INTERNATIONAL (America)
Address: 48720 Kato Rd., Fremont, CA 94538, USA

ASUS COMPUTER GmbH (Germany and Austria)
Address: Harkortstrasse 21-23, 40880 Ratingen, Germany

ASUSTeK (UK) LIMITED
Address: 1st Floor, Sackville House, 143-149 Fenchurch Street, London, EC3M 6BL, England, United Kingdom

Service and Support
Visit our multi-language website at https://www.asus.com/support.