Dimensional Illustrations

SV Wire Basket, Small

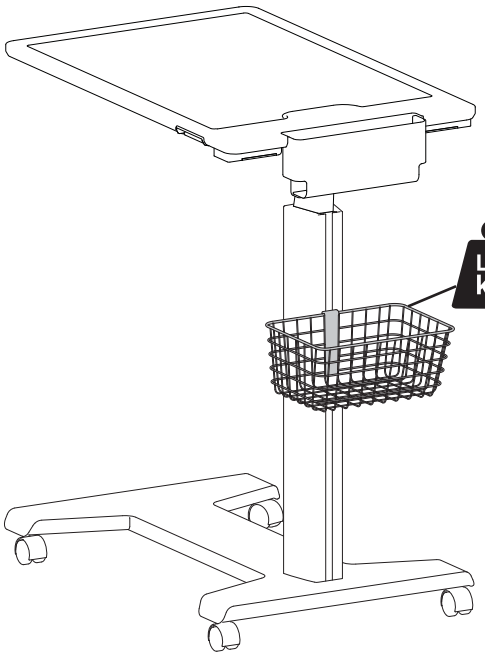

Weight Capacity
≤ 5 lbs. (2.27 kg)

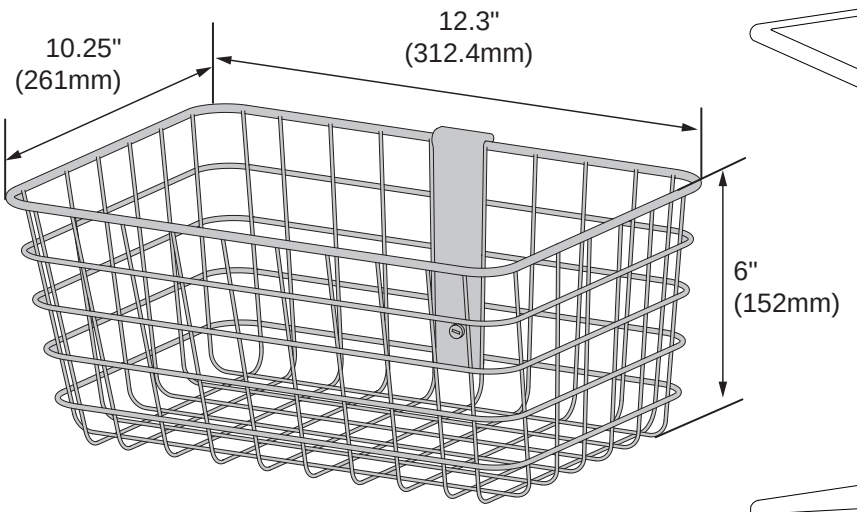

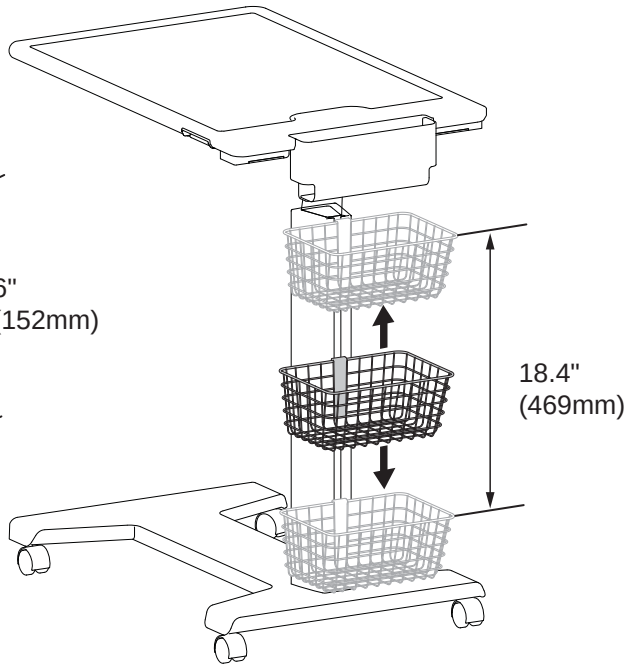

© 2017 Ergotron, Inc. rev. 05/02/2017 DIM-SVPET-Sbasket **Content is subject to change without notification**

Americas Sales and Corporate Headquarters	EMEA Sales	APAC Sales	Worldwide OEM Sales
St. Paul, MN USA (800) 888-8458 +1-651-681-7600 www.ergotron.com sales@ergotron.com	Amersfoort, The Netherlands +31 33 45 45 600 www.ergotron.com info.eu@ergotron.com	Tokyo, Japan www.ergotron.com apaccustomerservice@ergotron.com	www.ergotron.com info.oem@ergotron.com

ERGOTRON®