Dimensional Illustrations

# SV Wire Basket, Large

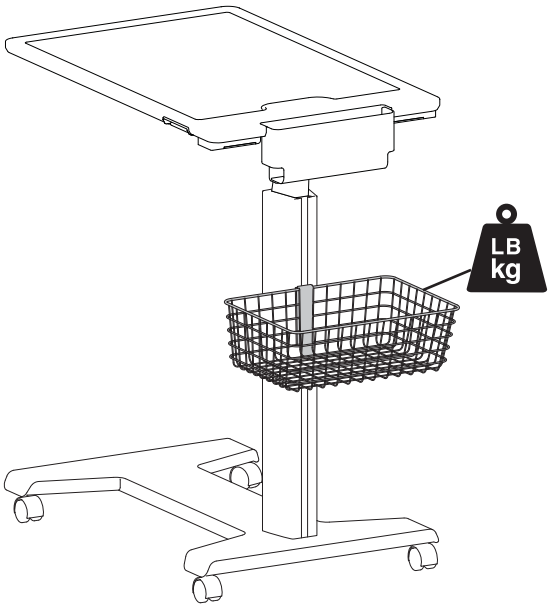


**Weight Capacity**
**≤ 5 lbs. (2.27 kg)**

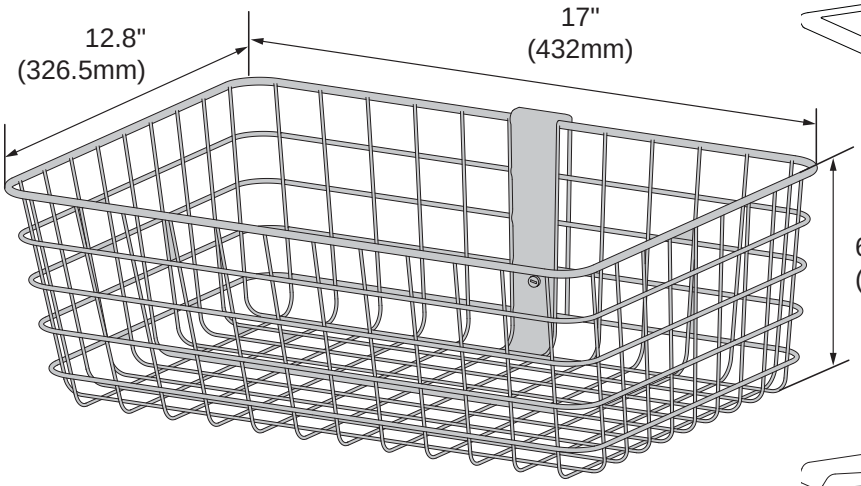


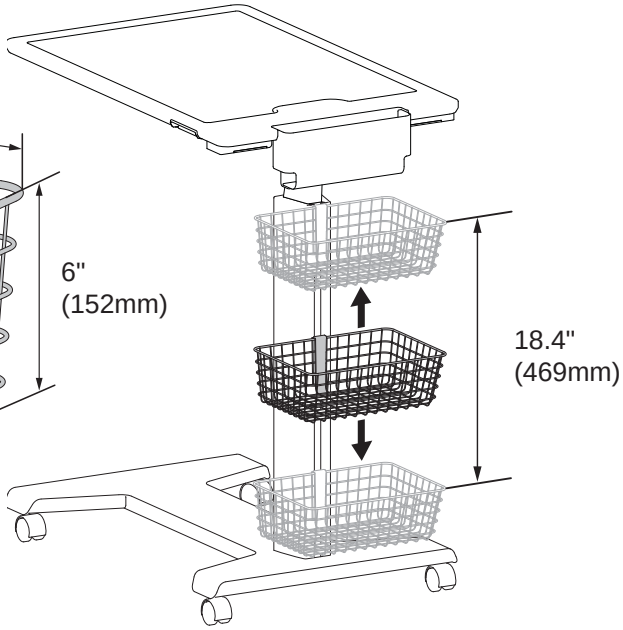


© 2017 Ergotron, Inc. rev. 05/02/2017 DIM-SVPET-Lbasket **Content is subject to change without notification**


| Americas Sales and Corporate Headquarters | EMEA Sales | APAC Sales | Worldwide OEM Sales |
|---|---|---|---|
| St. Paul, MN USA<br>(800) 888-8458<br>+1-651-681-7600<br>www.ergotron.com<br>sales@ergotron.com | Amersfoort, The Netherlands<br>+31 33 45 45 600<br>www.ergotron.com<br>info.eu@ergotron.com | Tokyo, Japan<br>www.ergotron.com<br>apaccustomerservice@ergotron.com | www.ergotron.com<br>info.oem@ergotron.com |


ERGOTRON®