Lenovo

ThinkVision

P24q-30 LCD Monitor
User's Guide
Machine Type: 63B4/63BC

Product Number

D22238QP1

63BC-GAR6-WW

63B4-GAR6-WW

First Edition (06 2022)

© Copyright Lenovo 2022
All rights reserved.

LENOVO products, data, computer software, and services have been developed exclusively at private expense and are sold to governmental entities as commercial items as defined by 48 C.F.R. 2.101 with limited and restricted rights to use, reproduction and disclosure.

LIMITED AND RESTRICTED RIGHTS NOTICE: IF products, data, computer software, or services are delivered pursuant a General Services Administration "GSA" contract, use, reproduction, or disclosure is subject to restrictions set forth in Contract No. GS-35F-05925.

Contents

Safety information iv

TCO Certified v

Safety and Maintenance Guidelines vii

Chapter 1 Getting started 1-1

Shipping contents 1-1
Notice for use 1-2
Product overview 1-3
Types of adjustments 1-3
User controls 1-4
Cable lock slot 1-4
Setting up your monitor 1-5
Connecting and turning on your monitor 1-5
Registering your option 1-9

Chapter 2 Adjusting and using your monitor 2-1

Comfort and accessibility 2-1
Arranging your work area 2-1
Health Administration 2-2
Low Blue Light 2-4
Accessibility information 2-4
Adjusting your monitor image 2-5
Using the direct access controls 2-5
Using the On-Screen Display (OSD) controls 2-6
Selecting a supported display mode 2-10
Image rotation 2-11
Understanding power management 2-11
Caring for your monitor 2-12
Detaching the monitor stand 2-12
Wall Mounting (Optional) 2-12

Chapter 3 Reference information 3-1

Monitor specifications 3-1
Troubleshooting 3-3
Manually installing the monitor driver 3-5
Service information 3-7

Appendix A. Service and Support A-1

Registering your option A-1
Online technical support A-1
Telephone technical support A-1

© Copyright Lenovo 2022

Worldwide telephone list A-1

Appendix B. Notices B-1

Recycling information B-2

Collecting and recycling a disused Lenovo computer or monitor B-2

Disposing of Lenovo computer components B-2

Trademarks B-3

Turkish statement of compliance B-3

Ukraine RoHS B-3

India RoHS B-3

Power cords and power adapters B-3

Safety information

General Safety guidelines

For tips to help you use your computer safety, go to:
http://www.lenovo.com/safety
Before installing this product, read the Safety Information.

مج، يجب قراءة دات السلامة

Antes de instalar este produto, leia as Informações de Segurança.

在安装本产品之前，请仔细阅读 Safety Information(安全信息)。

Prije instalacije ovog produkta obavezno pročitajte Sigurnosne Upute.

Před instalac tohoto produktu si přečtěte příručku bezpečnostních instrukcí.

Læs sikkerhedsforskrifterne, før du installerer dette produkt.

Ennen kuin asennat t m n tuotteen, lue turvaohjeet kohdasta Safety Information

Avant d'installer ce produit, lisez les consignes de sécurité.

Vor der Installation dieses Produkts die Sicherheitshinweise lesen.

Πριν εγκαταστήσετε το προϊόν αυτό, διαβάστε τις πληροφορίες ασφάλειας (safety information).

לפני שתתקינו מוצר זה, קראו את הוראות הבטיחות.

A termék telepítése előtt olvassa el a Biztonsági előírásokat!

Prima di installare questo prodotto, leggere le Informazioni sulla Sicurezza

製品の設置の前に、安全情報をお読みください。

본 제품을 설치하기 전에 안전 정보를 읽으십시오.

Пред да се инсталира овој продукт, прочитајте информацијата за безбедност.

Lees voordat u dit product installeert eerst de veiligheidsvoorschriften.

Les sikkerhetsinformasjonen (Safety Information) før du installerer dette produktet.

Przed zainstalowaniem tego produktu, należy zapoznać się
z książką "Informacje dotyczące bezpieczeństwa" (Safety Information).

Antes de instalar este produto, leia as Informações de Segurança.

Перед установкой продукта прочтите инструкции по технике безопасности.

Pred inštaláciou tohto produktu si prečítajte bezpečnostné informácie.

Pred namestitvijo tega proizvoda preberite Varnostne informacije.

Antes de instalar este producto lea la información de seguridad.

Läs säkerhetsinformationen innan du installerar den här produkten.

សូមអានពត៌មានល្អិតល្អន់ មុនពេលចាប់ផ្តើមបញ្ចូលកម្មវិធី

安裝本產品之前，請先閱讀「安全諮詢」。

© Copyright Lenovo 2022

TCO Certified

A third-party certification according to ISO 14024

Toward sustainable IT products

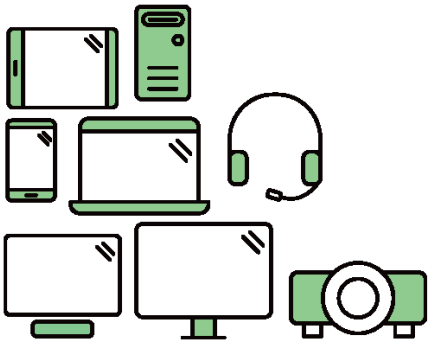

Say hello to a more sustainable product

IT products are associated with a wide range of sustainability risks throughout their life cycle. Human rights violations are common in the factories. Harmful substances are used both in products and their manufacture. Products can often have a short lifespan because of poor ergonomics, low quality and when they are not able to be repaired or upgraded.

This product is a better choice. It meets all the criteria in TCO Certified, the world's most comprehensive sustainability certification for IT products. Thank you for making a responsible product choice, that help drive progress towards a more sustainable future!

Criteria in TCO Certified have a life-cycle perspective and balance environmental and social responsibility. Conformity is verified by independent and approved verifiers that specialize in IT products, social responsibility or other sustainability issues. Verification is done both before and after the certificate is issued, covering the entire validity period. The process also includes ensuring that corrective actions are implemented in all cases of factory non-conformities. And last but not least, to make sure that the certification and independent verification is accurate, both TCO Certified and the verifiers are reviewed regularly.

Want to know more?

Read information about TCO Certified, full criteria documents, news and updates at **tcocertified.com.** On the website you'll also find our Product Finder, which presents a complete, searchable listing of certified products.

© Copyright Lenovo 2022

A third-party certification according to ISO 14024

Toward sustainable IT products

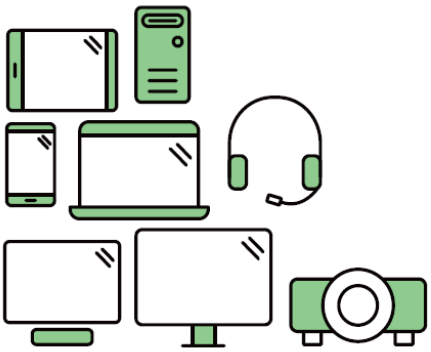

Say hello to a more sustainable product

IT products are associated with a wide range of sustainability risks throughout their life cycle. Human rights violations occur in the supply chain. Harmful substances are used both in products and their manufacture. Products can often have a short lifespan because of poor ergonomics, low quality and when they are not able to be repaired or upgraded.

This product is a better choice. It meets all the criteria in TCO Certified, the world's most comprehensive sustainability certification for IT products. Additionally, it fulfills the requirements of TCO Certified Edge, the supplemental certification that recognizes leading-edge products that exceed typical performance in a particular sustainability attribute. At our Product Finder **(tcocertified.com/product-finder)** you can find out which TCO Certified Edge criterion or criteria this product meets.

Criteria in TCO Certified have a life-cycle perspective and balance environmental and social responsibility. Compliance is verified by independent verification organizations that specialize in IT products, social responsibility or other sustainability issues. Verification is done both before and after the certificate is issued, covering the entire validity period. The process also includes ensuring that corrective actions are implemented in all cases of factory non-conformities.

Thank you for making a responsible product choice, that help drive progress towards a more sustainable future!

Want to know more?

Read information about TCO Certified, full criteria documents, news and updates at **tcocertified.com.** On the website you'll also find our Product Finder, which presents a complete, searchable listing of certified products.

© Copyright Lenovo 2022

Safety and Maintenance Guidelines

Important Safety Information

The power cord is designed for use with your monitor. To use a different cord, use only a power source and connection compatible with this monitor.

WARNING: Always connect your monitor, the computer, and other equipment to a grounded (earthed) power outlet. To reduce the risk of electric shock or damage to your equipment, do not disable the power cord grounding feature. The grounding plug is an important safety feature.

WARNING: For your safety, be sure that the grounded power outlet you plug the power cord into is easily accessible to the operator and located as close to the equipment as possible. To disconnect power from the equipment, unplug the power cord from the power outlet by grasping the plug firmly. Never pull on the cord.

CAUTION: To protect your monitor, as well as your computer, connect all power cords for your computer and its peripheral devices (such as a monitor, printer, or scanner) to a surge protection device such as a power strip with surge protection or uninterruptible power supply (UPS). Not all power strips provide surge protection; the power strips must be specifically labelled as having this ability. Use a power strip whose manufacturer offers a damage replacement policy, so you can replace your equipment if surge protection fails.

CAUTION: A certified power supply cord has to be used with this equipment. The relevant national installation and/or equipment regulations shall be considered. A certified power supply cord not lighter than ordinary polyvinyl chloride flexible cord according to IEC 60227 (designation H05VV-F 3G 0.75mm² or H05VVH2-F2 3G 0.75mm²) shall be used. An alternative flexible cord is synthetic rubber.

Safety Precautions

- Use only a power source and connection compatible with this monitor, as indicated on the label/back plate of the monitor.
- Be sure the total ampere rating of the products connected to the outlet does not exceed the current rating of the electrical outlet, and the total ampere rating of the products connected to the power cord does not exceed the rating of the power cord. Look on the power label to determine the ampere rating (Amps or A) for each device.
- Install your monitor near a power outlet that you can easily reach. Disconnect the monitor by grasping the plug firmly and pulling it from the outlet. Never disconnect the monitor by pulling the cord.
- Do not allow anything to rest on the power cord. Do not walk on the cord.
- While using VESA mount application, the AC Inlet must face to down side. Do not face any other position.

Maintenance Guidelines

To enhance the performance and extend the life of your monitor:

- Do not open your monitor cabinet or attempt to service this product yourself. If your monitor is not operating properly or has been dropped or damaged, contact your Lenovo authorized dealer, reseller, or service provider.
- Adjust only those controls that are described in the operating instructions.
- Turn your monitor off when not in use. You can substantially increase the life expectancy of the monitor by using a screen saver program and turning off the monitor when not in use.
- Keep your monitor in a well-ventilated area, away from excessive light, heat, or moisture.
- Slots and openings in the cabinet are provided for ventilation. These openings must not be blocked or covered. Never push objects of any kind into cabinet slots or other openings.
- Unplug the monitor from the power outlet before cleaning. Do not use liquid cleaners or aerosol cleaners.
- Do not drop the monitor or place it on an unstable surface.
- When removing the monitor base, you must lay the monitor face down on a soft area to prevent it from getting scratched, defaced, or broken.

Cleaning the Monitor

The monitor is a high-quality optical device that requires special care when cleaning. To clean the monitor, follow these steps:

1. Turn off the computer and the monitor.
2. Unplug your monitor from the power outlet before cleaning.

CAUTION: Do not use benzene, thinner, ammonia, or any volatile substance to clean the monitor screen or cabinet. These chemicals may damage the monitor. Do not use liquid or aerosol cleaners. Never use water to clean an LCD screen.

3. Wipe the screen with a dry, soft, clean cloth. If the screen requires additional cleaning, use an antistatic screen cleaner.
4. Dust the monitor housing. Use a damp cloth to clean the cabinet. If the cabinet requires additional cleaning, use a clean cloth dampened with isopropyl alcohol.
5. Plug in the monitor.
6. Turn on the monitor and the computer.

© Copyright Lenovo 2022

Chapter 1 Getting started

This User's Guide contains detailed information on the ThinkVision® P24q-30 Flat Panel Monitor. For a quick overview, please see the Setup Poster that was shipped with your monitor.

ThinkVision P24q-30 supports Lenovo Display Control Center - **ThinkColour.**

Shipping contents

The product package should include the following items:

- Information Flyer
- Flat Panel Monitor
- Monitor stand
- Monitor base
- Power Cord
- DP cable
- USB A-B Cable
- HDMI Cable (optional)

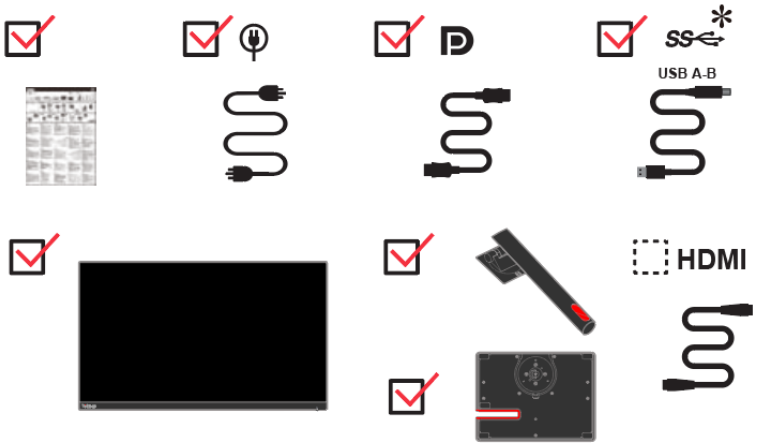

*: Depending on many factors such as the processing capability of peripheral devices, file attributes, and other factors related to system configuration and operating environments, the actual transfer rate using the various USB connectors on this device will vary and is typically slower than the data rates as defined by the respective USB specifications: - 5 Gbit/s for USB 3.1 Gen 1; 10 Gbit/s for USB 3.1 Gen 2 & 20 Gbit/s for USB 3.2.

Notice for use

To setup your monitor, please see the illustrations below.

Note: Do not touch the monitor within the screen area. The screen area is glass and can be damaged by rough handling or excessive pressure.

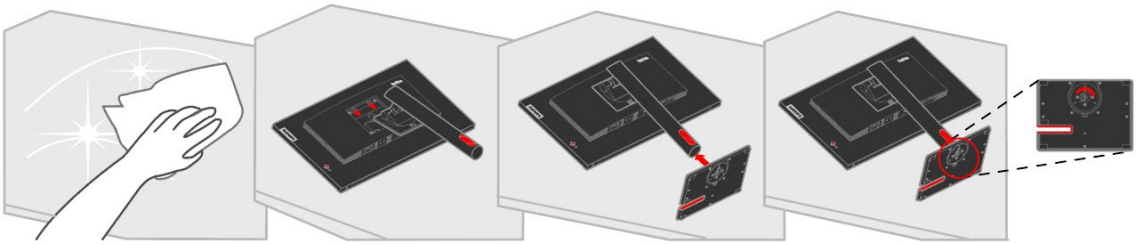

1. Place your monitor with the screen face down on a soft flat surface.
2. Put the stand and base to the monitor.

Note: To attach a VESA mount, please see “Detaching the monitor stand” on page 2-12.

Product overview

This section will provide information on adjusting monitor positions, setting user controls, and using the cable lock slot.

Types of adjustments

Tilt

Please see the illustration below for an example of the tilt range.

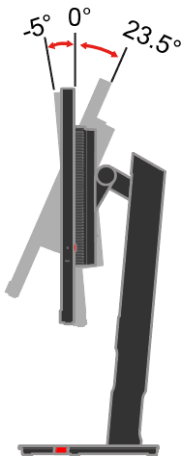

Swivel

With the built-in pedestal, you can tilt and swivel the monitor for the most comfortable viewing angle.

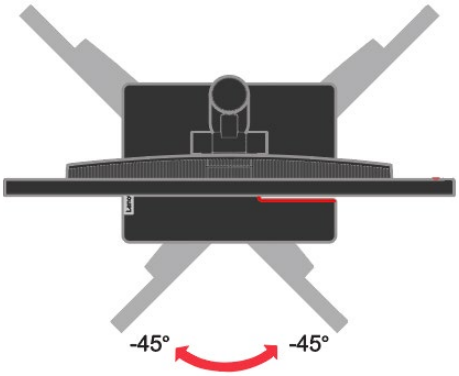

Height Adjustment

After pressing the top of the monitor, you can adjust the height of the monitor.

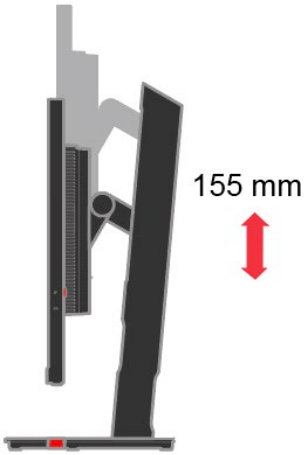

Monitor Pivot

- Adjust the monitor height before rotating the monitor screen. (Make sure that the monitor screen ascent to its highest point and it inclines backward at 35°)
- Then rotate clockwise or anticlockwise until the monitor stops at 90°.

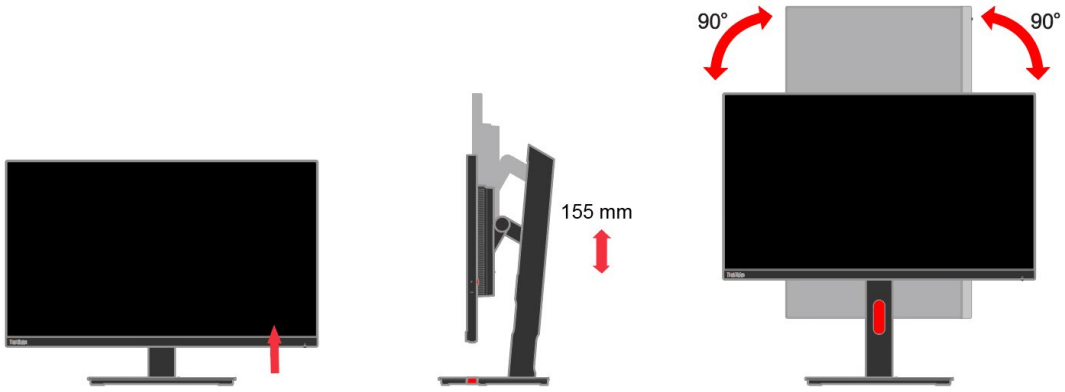

User controls

Your monitor has controls at the rear which are used to adjust the display.

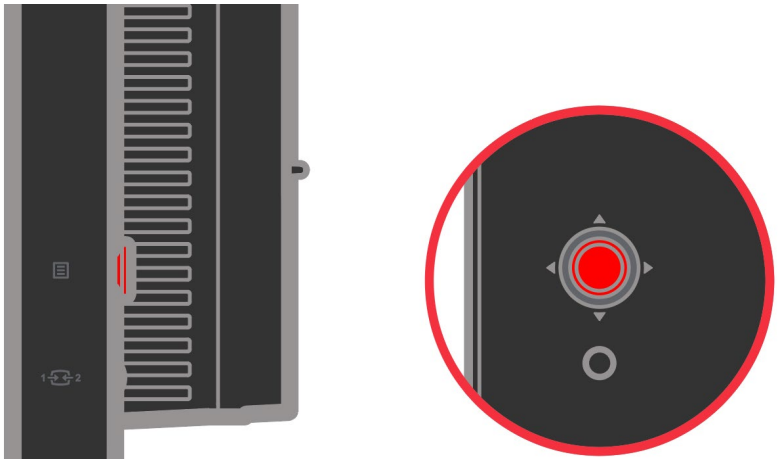

For information on how to use these controls, please see “Adjusting your monitor image” on page 2-5.

Cable lock slot

Your monitor is equipped with a cable lock slot located on the rear of your monitor. Please follow the instructions that came with the cable lock to attach it.

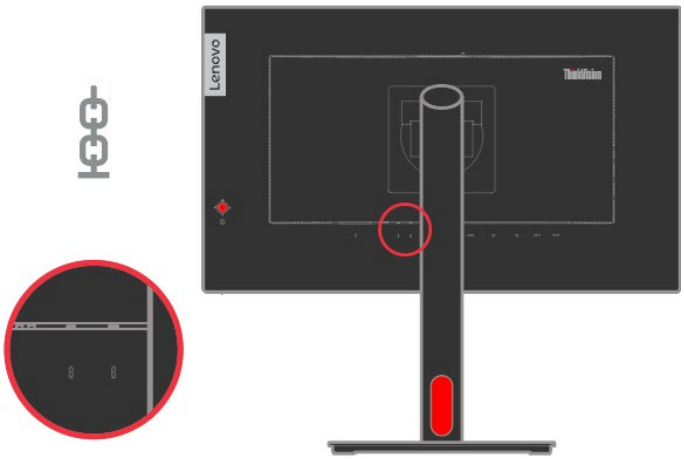

Setting up your monitor

This section provides information to help you set up your monitor.

Connecting and turning on your monitor

Note: Be sure to read the Safety Information located in the Flyer before carrying out this procedure.

1. Power off your computer and all attached devices, and unplug the computer power cord.

2. Connect one end of the DP cable to the DP connector on the back of the computer, and the other end to the DP connector on the monitor. Lenovo recommends that customers who require using the DisplayPort input on their monitor purchase the "Lenovo DisplayPort to DisplayPort cable 0A36537".
   For more information, go to the following:
   www.lenovo.com/support/monitoraccessories

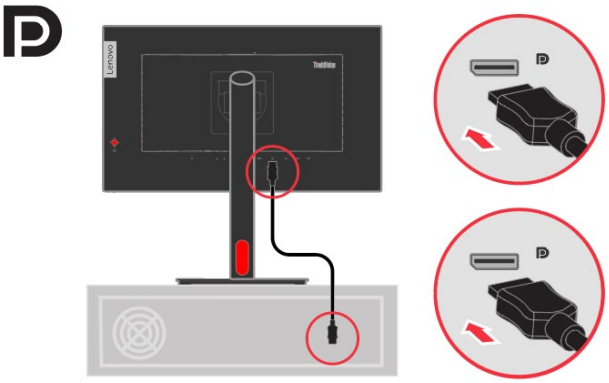

3. Connect one end of the HDMI cable to the HDMI connector on the back of the computer, and the other end to the HDMI connector on the monitor. Lenovo recommends that customers who require to use the HDMI input on their monitor purchase the “Lenovo HDMI to HDMI cable 0B47070”.

   For more information, go to the following:
   www.lenovo.com/support/monitoraccessories

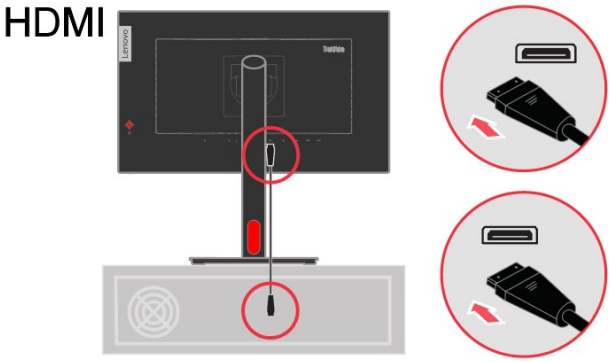

4. Connect one end of the USB 3.0 cable to the USB connector on the back of the computer, and the other end to the upstream USB connector on the monitor.

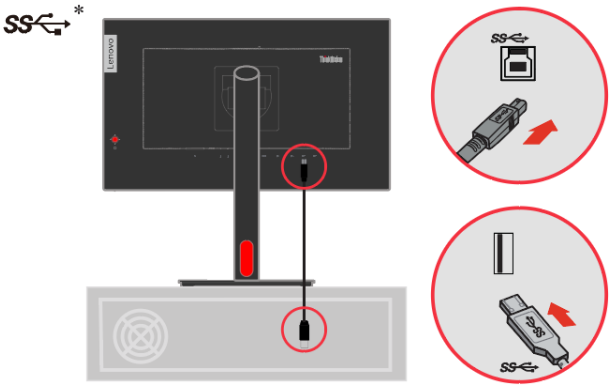

5. Connect the speaker's audio cable and audio jack of monitor to transfer audio source from DP, HDMI.

   Note 1: The audio output in DP and HDMI modes.

   Note 2: Excessive sound pressure from ear-/headphones can cause hearing damage/hearing loss.

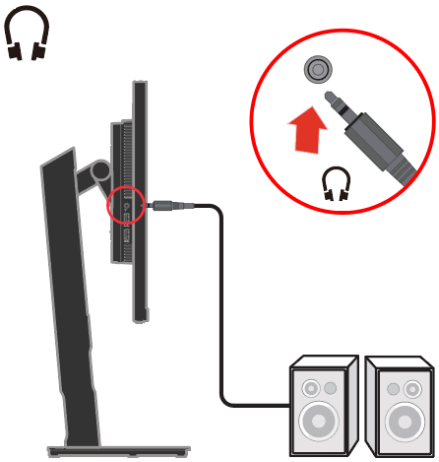

6. Connect one end of the USB cable to the USB downstream terminal of the monitor, and connect the other end of the USB cable to an appropriate USB port on your device.

   Note 1: The USB downstream port does not provide power while the monitor is switched off. (To use top port USB, first remove the rubber cover）

   Note 2: Power output for USB-A: 5V/0.9A, USB-BC1.2: 5V/2.4A. (To use top port USB, first remove the rubber cover)

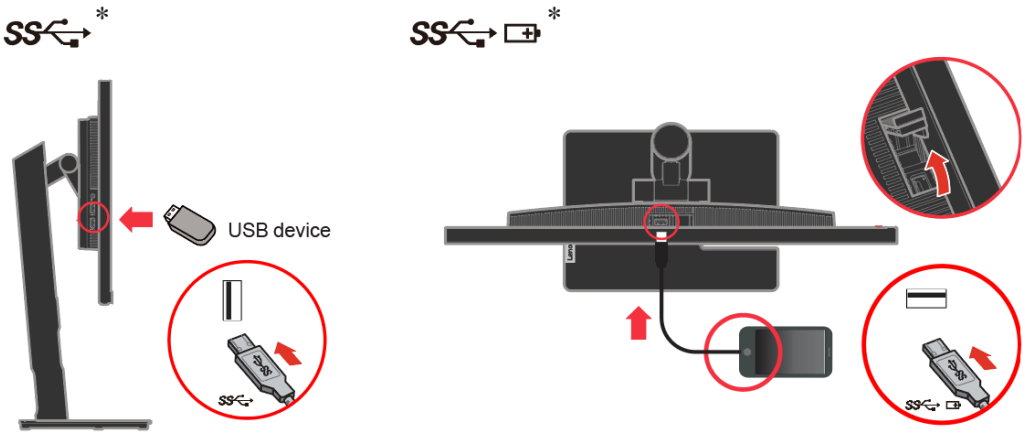

If there are any * tag, you can consult the comments on page 1-1.

7. Plug the monitor power cord and the computer cord into grounded electrical outlets.
   Note: A certified power supply cord has to be used with this equipment. The relevant national installation and/or equipment regulations shall be considered. A certified power supply cord not lighter than ordinary polyvinyl chloride flexible cord according to IEC 60227 (designation H05VV-F 3G 0.75mm² or H05VVH2-F2 3G 0.75mm²) shall be used. Alternative a flexible cord be of synthetic rubber according to IEC 60245 (designation H05RR-F 3G 0.75mm²) shall be used.

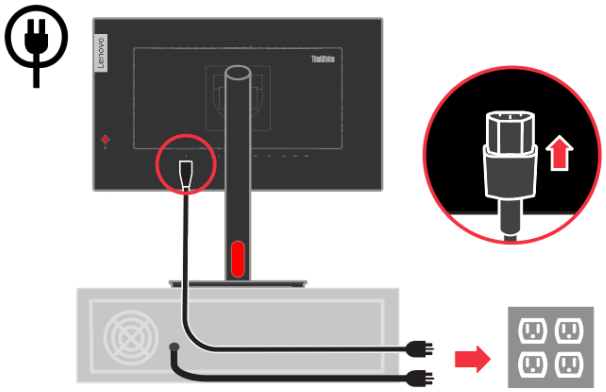

8. After attaching all necessary cables to your monitor and computer, organize all cables as shown below.

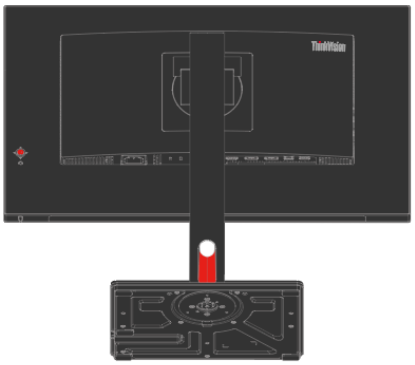

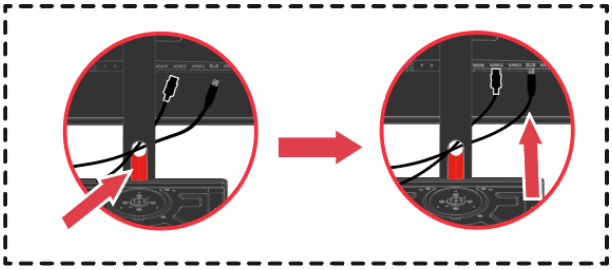

9. Connect one end of the DP cable to the DP input on the back of another monitor, and the other end to the DP output connector (for daisy chain) on the monitor. (The best resolution (2560x1440 @ 60Hz) output is adopted to ensure the best viewing effect)

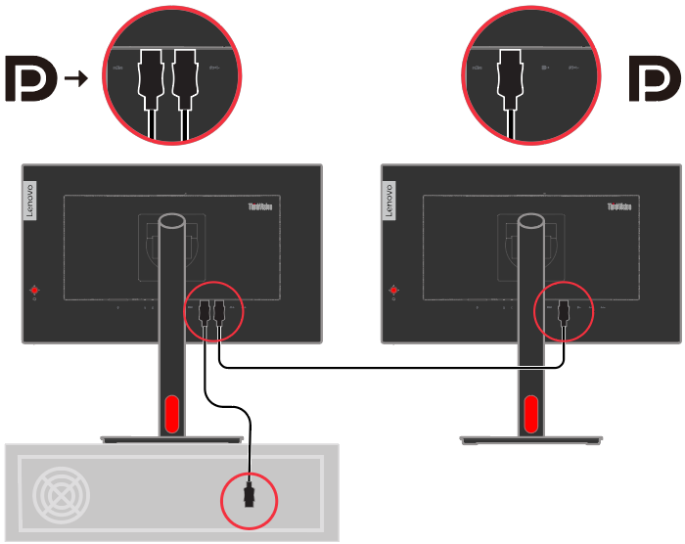

When using the Daisy chain function, when the 1st P24q-30 uses the highest resolution effect, it will affect the output resolution of the 2nd monitor.

Note 1: It is recommended to use the best resolution (2560x1440 @60Hz) output to achieve the best viewing effect.

Note 2: Monitors sold in NA include a DP cable

Note 3: Daisy Chain & HDR Daisy Chain performance is controlled by graphic card.

Note 4: For other regions Lenovo recommends that customers who require using the Display Port input on their monitor purchase the "Lenovo Display Port to Display Port cable 0A36537".

Note 5: Turn on the HDR from the OS, some graphics cards may cause the second screen (daisy chain) fail to display.

For more information, go to the following:
www.lenovo.com/support/monitor accessories

10. Power on the monitor and the computer.

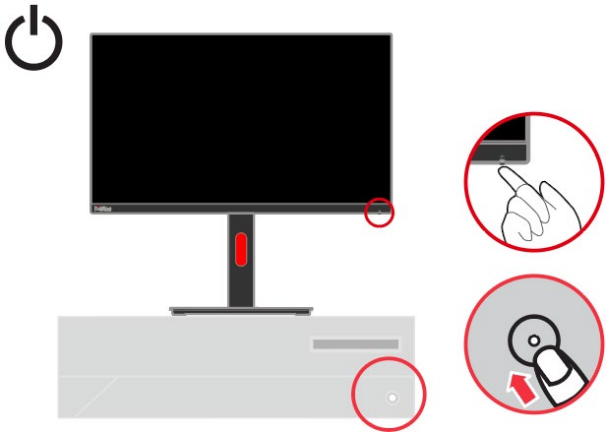

11. To install the monitor driver, you must download it from Lenovo website，(http://support.lenovo.com/docs/p24q_30) and follow the instructions on page 3-5.

Registering your option

Thank you for purchasing this Lenovo® product. Please take a few moments to register your product and provide us with information that will help Lenovo to better serve you in the future. Your feedback is valuable to us in developing products and services that are important to you, as well as in developing better ways to communicate with you. Register your option on the following Web site: http://www.lenovo.com/register

Lenovo will send you information and updates on your registered product unless you indicate on the Web site questionnaire that you do not want to receive further information.

Chapter 2 Adjusting and using your monitor

This section will give you information on adjusting and using your monitor.

Comfort and accessibility

Good ergonomic practice is important to get the most from your personal computer and to avoid discomfort. Arrange your workplace and the equipment you use to suit your individual needs and the kind of work that you perform. In addition, use healthy work habits to maximize your performance and comfort while using your computer.

Arranging your work area

Use a work surface of appropriate height and available working area to allow you to work in comfort.
Organize you work area to match the way you use materials and equipment. Keep your work area clean and clear for the materials that you typically use and place the items that you use most frequently, such as the computer mouse or telephone, within the easiest reach.
Equipment layout and setup play a large role in your working posture. The following topics describe how to optimize equipment setup to achieve and maintain good working posture.

Positioning and viewing your monitor
Position and adjust your computer monitor for comfortable viewing by considering the following items:

- **Viewing distance:** Optimal viewing distances for monitors range from approximately 510mm to 760mm (20 in to 30 in) and can vary depending on ambient light and time of day. You can achieve different viewing distances by repositioning your monitor or by modifying your posture or chair position. Use a viewing distance that is most comfortable for you.
- **Monitor height:** Position the monitor so your head and neck are in a comfortable and neutral (vertical, or upright) position. If your monitor does not have height adjustments, you might have to place books or other sturdy objects under the base of the monitor to achieve the desired height. A general guideline is to position the monitor such that the top of the screen is at or slightly below your eye-height when you are comfortably seated. However, be sure to optimize your monitor height so the line of site between your eyes and the centre of the monitor suits your preferences for visual distance and comfortable viewing when your eye muscles are in a relaxed stated.
- **Tilt:** Adjust the tilt of your monitor to optimize the appearance of the screen content and to accommodate your preferred head and neck posture.
- **General location:** Position your monitor to avoid glare or reflections on the screen from overhead lighting or nearby windows.

The following are some other tips for comfortable viewing of your monitor:
- Use adequate lighting for the type of work you are performing.
- Use the monitor brightness, contrast, and image adjustment controls, if equipped, to optimize the image on your screen to meet your visual preferences.
- Keep your monitor screen clean so you can focus on the screen's contents.

Any concentrated and sustained visual activity can be tiring for your eyes. Be sure to periodically look away from your monitor screen and focus on a far object to allow your eye muscles to relax. If you have questions on eye fatigue or visual discomfort, consult a vision care specialist for advice.

Health Administration

Prolong exposure to computer screens may cause temporary visual fatigue. Factors including working environment, working habit and posture, screen flicker and blue light contribute to this condition. To minimize visual fatigue certain adjustments can be made on the work stations or using suitable computer screens with features that alleviate eye strain.

Environment

Visual fatigue is affected by the working environment. Glare reductions and appropriate lighting situations help minimize this condition.

- Glare reduction

Glare can be reduced by

a) Changing position of any light source that is causing the glare.
b) Fitting the light sources with appropriate diffusers or lampshade.
c) Using curtains or blind on windows to minimize glare from direct sunlight.
d) Adjusting monitor position to be perpendicular to the source of light or windows.
e) Using an anti-glare screen - ThinkVision monitors have anti-glare surface treatment that scatters light for a reflection-free work usage.

- Lighting

Adequate lighting is necessary to avoid glare and eye fatigue. Excessive or insufficient lighting makes the display on screen harder to see. Generally, lighting level should not exceed 750 lux and levels ranging from 300 to 500 lux are most appropriate for computer desk work. Recommended lighting arrangement includes positioning work stations away from direct sunlight or using overhead lighting with baffles or louvers that reduces glare.

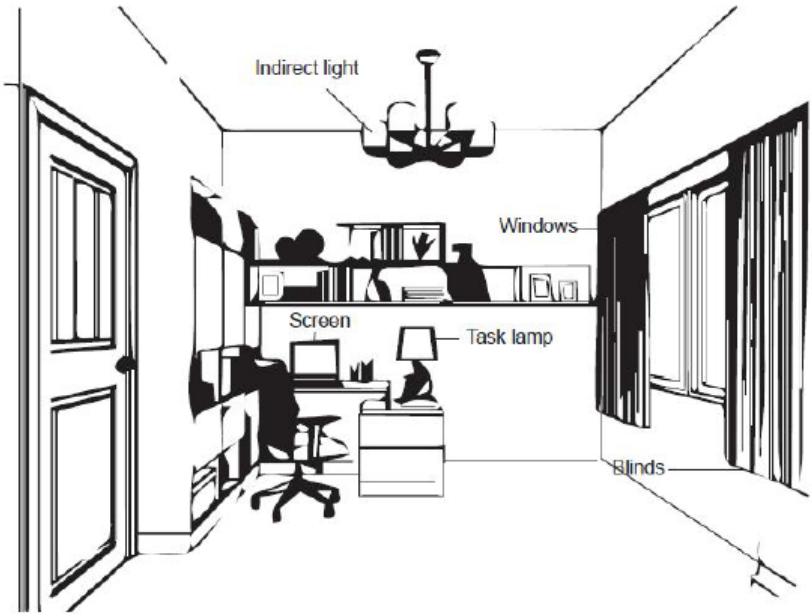

Working Habits

Long exposures to computer screens may cause eye strain. Symptoms include headache, burning eyes, blurred vision and discomfort. To minimize eye strain, computer users can adjust working habits to let their eyes relax and recover.

- **Break Times**

Computer users should take some time away from the screen especially if working for prolong hours. Generally, it is recommended to take short breaks (5 – 15 mins) after 1 –2 hours of continuous computer works. Taking short and frequent breaks is more advised than longer breaks.

- **Looking at Distant Objects**

Users often blink less when in front of monitor screen. To minimize eye strain and dryness, users should rest the eye periodically by focusing on objects that are far away.

- **Eye and Neck Exercises**

Certain exercise reduces eye strain and prevent early onset of musculo-skeletal disorders. It is recommended to repeat these exercises often. However, should symptoms persists it is recommended to consult a physician.

Exercises for the eye:

1. Alternate looking up and looking down while keeping the body and head upright.
2. Slowly roll your eyes to look to the left and right.
3. Roll eyes to look at objects on the upper right corner and then on lower right. Do same thing to look at objects on the upper left and lower left.

Exercises for the neck:

1. Relax arm at the side. Bend head forward to slightly stretch the neck. Hold for 5 seconds.
2. Relax arm at the side. Turn head to the right. Hold for 5 seconds. Then turn head to the left.
3. Relax arm at the side. Swing head to the left. Hold for 5 seconds. Then swing head to the right.

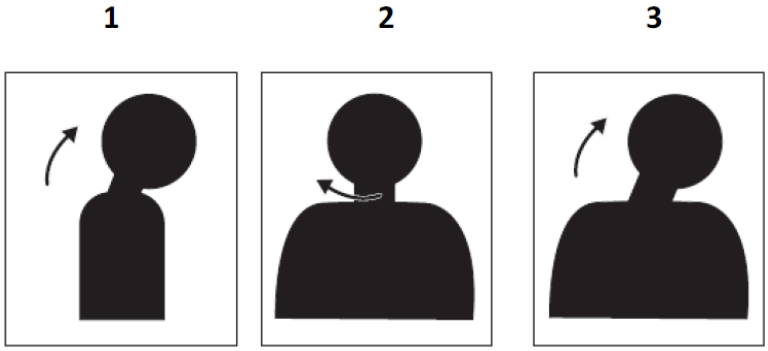

Working Posture

Appropriate working position helps minimize eye discomfort. Seating position and ideal placement of monitor are essential for a comfortable working experience.

- **Seating Position**

Placing the monitor too far or too close may lead to eye strain. Far viewing distance causes users to lean forward to see small texts, which strain the eyes and torso. Close viewing distance, on the other hand, strains the eye resulting from exerting more effort to focus and also causes the user to sit in awkward body posture (i.e. tilting the head, typing with outstretched arms, etc.)

Recommended viewing distance between the eye and the monitor screen is 1.5 x the diagonal of the screen. Solutions in meeting this required distance in cramped office situations include pulling desk away from wall or divider to make room for monitor, using flat panel or compact displays placing the monitor in the desk corner, or placing the keyboard in an adjustable drawer to create a deeper working surface.

ThinkVision monitors are design to maximize work space (e.g. having thin profiles, compatible for ThinkCentre Tiny back mount, practical cable management, etc).

- **Viewing Angle**

Neck fatigue and pain may result from prolong turning of the head to see objects on the monitor screen. To minimize this, position the monitor directly in front so the head, neck and torso face forward to the screen. It is recommended that monitor should not be more than 35 degrees to the right or left of the head.

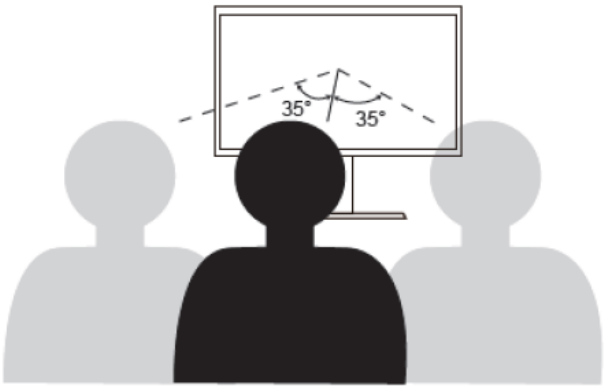

Monitors should also not be placed too high or too low as this contributes to awkward posture which results to muscle fatigue.

Reduce Flicker

Monitor flickers refer to repeated changes in monitor light intensity. It is caused by several factors including but not limited to voltage fluctuations. Reducing flicker minimizes eye strain and headaches. ThinkVision monitors allow users to use high frequency display modes that can effectively reduce flicker.

Low Blue Light

Concerns on blue light affecting eye health have risen over the years. Blue light have wavelength between 300 nm to 500 nm. The monitors under default setting mode reduce blue light emissions. The monitors achieve the requirement of Low blue Light (Hardware Solution).

Accessibility information

Lenovo is committed to providing greater access to information and technology to people with disabilities. With assistive technologies, users can access information in the way most appropriate to their disability. Some of these technologies are already provided in your operating system; others can be purchased through vendors or accessed at:

https://lenovo.ssbbartgroup.com/lenovo/request_vpat.php

Adjusting your monitor image

This section describes the user control features used to adjust your monitor image.

Using the direct access controls

The direct access controls can be used when the On Screen Display (OSD) is not displayed.

Table 2-1 Direct access controls

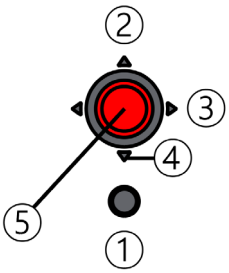

Joy Button /Key		Control	Description
1	Input	Input change	Switches the video input source.
2	Up	Brightness	Direct access to Brightness adjustment. (This is default and can be changed by Quick settings.)
3	Right	Color mode	Direct access to Color mode adjustment. (This is default and can be changed by Quick settings.)
4	Down	Contrast	Direct access to Contrast adjustment. (This is default and can be changed by Quick settings.)
5	Enter	Main menu	Open OSD main menu

Using the On-Screen Display (OSD) controls

The settings adjustable with the user controls are viewed through the On-Screen Display (OSD), as shown below.

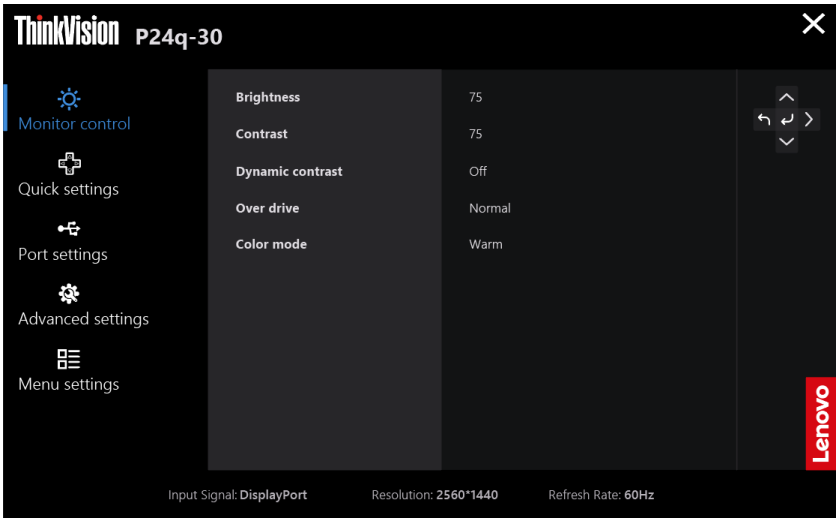

To use the controls:

1. Press ↵ to open the main OSD menu.
2. Use ⌃ or ⌄ to move among the icons. Select an icon and press ↵ to access that function. If there is a sub-menu, you can move between options using ⌃ or ⌄ , then press ↵ to select that function. Use ⌃ or ⌄ to make adjustments. Press ↵ to save.
3. Press ↰ to move backwards through the sub-menus and exit from the OSD.
4. Press and hold ↵ for 10 seconds to lock the OSD. This will prevent accidental adjustments to the OSD. Press and hold ↵ for 10 seconds to unlock the OSD and allow adjustments to the OSD.
5. Enables DDC/CI by default. Use OSD Exit Key, press and hold the ↰ buttons for 10 seconds to disable/enable DDC/CI function. The words " DDC/CI Disable/DDC/CI/Enable" shows on the screen.
6. The ENERGY STAR option resets all user settings to default values so that the monitor can meet the requirements of Energy Star.

   ENERGY STAR

   Energy Star is an energy saving program for consumer electronics led by the U.S. government. It was launched in 1992 by EPA and DOE to reduce energy consumption and greenhouse gas emissions. Energy Star logo is a symbol of energy conservation and environmental protection. It improves the concept of energy efficiency of consumers and manufacturers, and effectively guides the market.
   The regulation of Energy Star improves energy efficiency and reduces air pollution by using more energy-efficient equipment in homes, offices and factories. One way to achieve this goal is to use management to reduce energy consumption when products are not in use.
   The default settings for monitors conform to Energy Star certification. Any changes by users for more features and functionalities may increase power consumption, which will exceed the limitation of Energy Star's standard. If the user changes the options related to energy efficiency when using, such as brightness, color mode, etc., select All Reset Factory or choose the Energy Star option, the power consumption will be restored to the energy efficiency with Energy Star standard.
   For more information, please refer to (www.energystar.gov/products). All products of Energy Star will be posted online and can be accessed directly by governments, public institutions and consumers.

Table 2-2 OSD functions

OSD Icon on Main Menu	Submenu	Description	Controls and Adjustments
Monitor control	Brightness	Adjusts overall screen brightness	^ v
	Contrast	Adjusts difference between light and dark areas.	^ v
	Dynamic contrast	Enable dynamic contrast ratio. • On • Off	^ v
	Over drive	• Off • Normal • Extreme	^ v
	Color mode	Adjusts intensity of red, green, and blue. • sRGB • DCI-P3 • BT.709 • Neutral • Warm • Cool • Custom Red: Increases or decreases the saturation of 'red' in the image. Green: Increases or decreases the saturation of 'green' in the image. Blue: Increases or decreases the saturation of 'blue' in the image.	^ v
Quick settings	Right key	• Brightness • Contrast • Scenario mode • Language • Color mode	^ v
	Up key	• Brightness • Contrast • Scenario mode • Language • Color mode	^ v
	Down key	• Brightness • Contrast • Scenario mode • Language • Color mode	^ v

OSD Icon on Main Menu	Submenu	Description	Controls and Adjustments
Port settings	Input signal	This monitor can accept video signals through three different connectors. Select digital among OSD controls when you use HDMI/DP connector. • AUTO • DisplayPort • HDMI	^ v
	USB charging	• On • Off	^ v
	DP select	• DP 1.4 • DP 1.2	^ v
	DP daisy chain	• Auto • On • Off	^ v
Advanced settings	Scenario modes	• Panel Native • Image Creation • Digital Cinema • Video Creation	^ v
	Button repeat rate	• Default • Slow • Off	^ v
	Aspect ratio	Selects type of scaled image. • Full Screen: Expand image to full screen. • Original AR: Ratio with input signal.	^ v
	LED indicator	• On • Off	^ v
	Power button lock	• On • Off	^ v
	HDR 10	• Auto • Off	^ v
Menu Settings	Information	• Model name • Refresh rate • Firmware • Serial number	
	Language	Select OSD Language. **Note:** The language chosen only affects the language of the OSD. It has no effect on any software running on the computer.	^ v

OSD Icon on Main Menu	Submenu	Description	Controls and Adjustments
	OSD Time Out	Sets the length of time the OSD will remain active after the last time a button is pressed.	⌃ ⌄
	OSD position	Adjust osd horizontal and vertical position	⌃ ⌄ ⌃ ⌄
	OSD rotation	• Normal • 90 • 270	⌃ ⌄
	Transparency	Choose the transparency of OSD	⌃ ⌄
	Factory Reset	Resets monitor to the original factory settings. • Reset • No The ENERGY STAR Logo means resets all user settings to default values so that the monitor can meet the requirements of Energy Star.	⌃ ⌄

* The use of Extreme Mode (response time) may result in reduced display quality when fast moving video graphics are displayed.

Users should check Extreme Mode (response time) to verify if it is compatible with any applications they would like to use it with.

Selecting a supported display mode

The display mode the monitor uses is controlled by the computer. Therefore, refer to your computer documentation for details on how to change display modes.
The image size, position and shape might change when the display mode changes. This is normal and the image can be readjusted using automatic image setup and the image controls.
Unlike CRT monitors, which require a high refresh rate to minimize flicker, LCD or Flat Panel technology is inherently flicker-free.
Note: If your system has previously been used with a CRT monitor and is currently configured to a display mode outside the range of this monitor, you may need to re-attach the CRT monitor temporarily until you have re-configured the system; preferably to 2560x1440 @ 60Hz, which is the Native Resolution Display mode.
The display modes shown below have been optimized at the factory.

Table 2-3. Factory set display modes

Addressability	Refresh rate
720x400	70Hz
640x480	60Hz
640x480	72Hz
640x480	75Hz
800x600	60Hz
800x600	72Hz
800x600	75Hz
1024x768	60Hz
1024x768	70Hz
1024x768	75Hz
1152x864	75Hz
1280x720	60Hz
1280x800	60Hz
1280x1024	60Hz
1280x1024	70Hz
1280x1024	75Hz
1440x900	60Hz
1600x900	60Hz
1680x1050	60Hz
1920x1080	60Hz
2560x1440	60Hz
2560x1440	75Hz

Image rotation

Before rotating the monitor, you should set-up your computer to rotate the image. Rotating the image may require special rotation software or you may find that your computer is preloaded with video graphic drivers that allows image rotation. Check the Graphic Properties setting on your computer to see if this feature is available. Try these steps to check if image rotation is available on your computer.

1. Right-click on the desktop and click Properties.
2. Select the Settings tab and click Advanced.
3. If you have ATI, select the Rotation tab and set the preferred rotation. If you have nVidia, click the nVidia tab, in the left-hand column select NV Rotate, and then select the preferred rotation. If you have Intel, select the Intel graphics tab, click Graphic Properties, select the Rotation tab, and then set the preferred rotation.

Check with the manufacturer of your computer to see if graphic drivers with image rotation can be downloaded from their support website.

Understanding power management

Power management is invoked when the computer recognizes that you have not using your mouse or keyboard for a user-definable period. There are several states as described in the table below.
For optimal performance, switch off your monitor at the end of each working day, or whenever you expect to leave it unused for long periods during the day.

Table 2-4. Power indicator

State	Power Indicator	Screen	Restoring Operation	Compliance
On	Steady green	Normal		
Standby/ Suspend	Steady White	Blank	Press a key or move the mouse. There may be a slight delay reappears. **Note:** Standby also occurs if there is no image output to the monitor.	ENERGY STAR
Off	Off	Off	Press power key to switch on There may be a slight delay before the image reappears.	ENERGY STAR

Energy Star	Power consumption
P_{on}	< 16 W
E_{TEC}	< 49 kWh

** Maximum power consumption with max luminance.

This document is informational only and reflects laboratory performance. Your product may perform differently, depending on the software, components and peripherals you ordered and shall have no obligation to update such information. Accordingly, the customer should not rely upon this information in making decisions about electrical tolerances or otherwise. No warranty as to accuracy or completeness is expressed or implied.

Caring for your monitor

Be sure to turn off the power before you perform any maintenance on the monitor.

Do not:

- Apply water or liquid directly to your monitor.
- Use solvents or abrasives.
- Use flammable cleaning materials to clean your monitor or any other electrical equipment.
- Touch the screen area of your monitor with sharp or abrasive items. This type of contact may cause permanent damage to your screen.
- Use any cleaner which contains an anti-static solution or similar additives. This may harm the coating of the screen area.

Do:

- Lightly dampen a soft cloth with water and use this to gently wipe the covers and the screen.
- Remove grease or finger marks with a damp cloth and a little mild detergent.

Detaching the monitor stand

After placing the monitor face down on a clean and soft surface, push the hook of the stand and lift the stand up to remove it from the monitor.

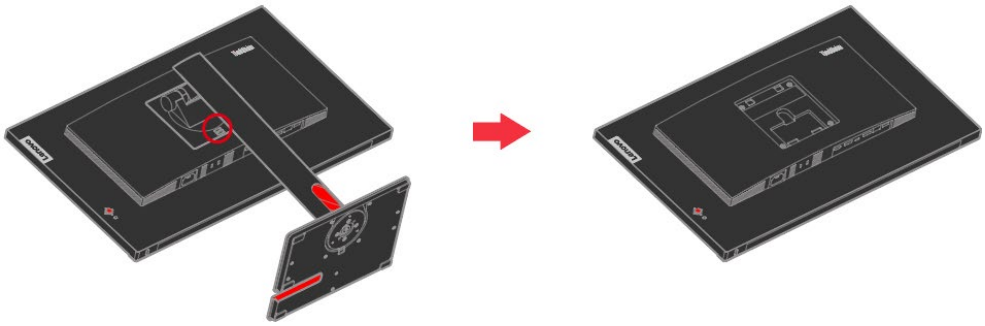

Wall Mounting (Optional)

Refer to the instructions that come with the VESA compatible base mounting kit.

1. Place the monitor face down on a non-abrasive surface on stable flat table.
2. Remove the stand.
3. Attach the mounting bracket from the wall mounting kit to the monitor.
4. Mount the monitor on the wall by following the instructions that come with the base mounting kit.

NOTE: For use only with UL and GS Listed Wall Mount Bracket with minimum weight/load bearing capacity of 6.00 kg. In order to fulfil TCO Certification for this wall mounting option, shielded power cable is mandatory to be used. Attach the mounting bracket from the VESA compatible wall mounting kit (100mm x100mm distance), the type of VESA mounting screw is M4 x 10 mm.

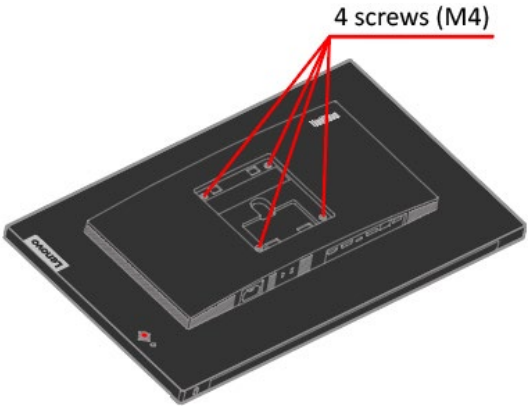

Chapter 3 Reference information

This section contains monitor specifications, instructions to manually install the monitor driver, troubleshooting information, and service information.

Monitor specifications

Table 3-1. Monitor specifications

Dimensions	Height	503.8 mm (19.83 in.)
	Depth	199.7 mm (7.86 in.)
	Width	539.5 mm (21.24 in.)
Weight	Unpacked	5.67 kg
Stand	Tilt range	Range: -5°/+23.5°
	Swivel	Range: -45°/+45°
	Lift	Range: 155 mm
	Pivot	Yes (clockwise 90° & anticlockwise 90°)
VESA mount	Supported (GS&UL Approved)	100 mm (3.94 in.)
Image	Viewable image size	604.4 mm (23.8 in.)
	Maximum height	296.3 mm (11.66 in.)
	Maximum width	526.8 mm (20.74 in.)
	Pixel pitch	0.205 mm (0.00807 in.) (V)
	Response time	Off: 14 ms Normal: 6 ms Extreme: 4 ms
Power input	Supply voltage	100-240 VAC, 60/50 Hz
	current	1.5 A
Audio	Audio Jack	Audio out
Power consumption **Note:** Power consumption figures are for the monitor and the power supply combined.	Max Consumption	65 W
	Typical Consumption	25 W
	Standby/Suspend	＜0.5 W
	Off	＜0.3 W
Video input (DP)	Input signal	DP *
	Horizontal addressability	2560 pixels (max)
	Vertical addressability	1440 lines (max)
	Clock frequency	300 MHz

Video input (HDMI)	Input signal	HDMI
	Horizontal addressability	2560 pixels (max)
	Vertical addressability	1440 lines (max)
	Clock frequency	300 MHz
Aspect Ratio	Size ratio	16:9
Communications	VESA DDC	CI
Altitude Test	Operation	5000 m (16404 ft.)
Supported Display Modes (VESA Standard modes between noted ranges)	Horizontal frequency	28 kHz – 112 kHz
	Vertical frequency	50 Hz – 76 Hz
	Native Resolution	2560 x 1440 at 60 Hz
Temperature	Operating	0° to 40°C (32°F to 104° F)
	Storage	-20° to 60°C (-4°F to 140° F)
	Shipping	-20° to 60°C (-4° F to 140° F)
Humidity	Operating	8% to 80%
	Storage	5% to 95%
	Shipping	5% to 95%

*: DP1.4 (HBR2:21.60Gbit/s) HBR2: High Bit Rate 2

Troubleshooting

If you have a problem setting up or using your monitor, you might be able to solve it yourself. Before calling your dealer or Lenovo, try the suggested actions that are appropriate to your problem.

Table 3-2. Troubleshooting

Problem	Possible cause	Suggested action	Reference
The words" Out of Range" are shown on the screen, and the power indicator is flashing white.	The system is set to a display mode which is not supported by the monitor.	● If you are replacing an old monitor, reconnect it and adjust the display mode to within the specified range for your new monitor. ● If using a Windows system, restart the system in safe mode, then select a supported display mode for your computer. ● If these options do not work, contact the Customer Support Centre.	"Selecting a supported display mode" on page 2-10
The image quality is unacceptable.	The video signal cable is not connected with the monitor or system completely.	Be sure the signal cable is firmly plugged into the system and monitor.	"Connecting and turning on your monitor" on page 1-5
	The color settings may be incorrect.	Select another colour setting from the OSD menu.	"Adjusting your monitor image" on page 2-5
The power indicator is not lit and there is no image.	● The monitor's power switch is not switched on. ● The power cord is loose or disconnected. ● There is no power at the outlet.	● Be sure the power cord is connected properly. ● Be sure the outlet has power. ● Power on the monitor. ● Try using another power cord. ● Try using another electrical outlet.	"Connecting and turning on your monitor" on page 1-5

Table 3-2. Troubleshooting (continued)

Problem	Possible cause	Suggested action	Reference
Screen is blank and power indicator is steady amber or flashing white	The monitor is in Standby/Suspend mode	• Press any key on the keyboard or move the mouse to restore operation. • Check the Power options settings on your computer.	"Understanding power management" on page 2-11
The power indicator is white, but there is no image.	The video signal cable is loose or disconnected from the system or monitor.	Be sure the video cable is connected with the system properly.	"Connecting and turning on your monitor" on page 1-5
	The monitor brightness and contrast are at the lowest setting.	Adjust the brightness and contrast setting on the OSD menu.	"Adjusting your monitor image" on page 2-5
One or more of the pixels appear discoloured	This is a characteristic of the LCD technology and is not an LCD defect.	If there are more than five pixels missing, contact the Customer Support Centre.	Appendix A, "Service and Support" on page A-1
• Fuzzy lines in text or a blurry image. • Horizontal or vertical lines through the image.	• Your system Display Properties setting have not been optimized.	Adjust the resolution settings on your system to match the native resolution for this monitor: 2560 x 1440 at 60 Hz.	"Adjusting your monitor image" on page 2-5
		When working in the native resolution, you may find additional improvements by adjusting the Dots Per Inch (DPI) setting on your system.	See the Advanced section of your system's display properties.

Manually installing the monitor driver

Below are steps for manually installing the monitor driver in Microsoft Windows 10, Microsoft Windows 11.

Installing the monitor driver in Windows 10

To use the Plug and Play feature in Microsoft Windows 10, do the following:

1. Turn off the computer and all attached devices.
2. Ensure that the monitor is connected correctly.
3. Turn on the monitor and then turn on the computer. Allow your computer to boot into Windows 10 operating system.
4. From the Lenovo website http://support.lenovo.com/docs/p24q_30, find the corresponding monitor driver and download it to a PC to which this monitor is connected (such as a desktop).
5. On the Desktop, move mouse to bottom-left corner of screen, right-click choose Control Panel, then double click the icon of Hardware and Sound, and then click Display.
6. Click the Change the display settings tab.
7. Click the **Advanced Settings** button.
8. Click the **Monitor** tab.
9. Click the **Properties** button.
10. Click the **Driver** tab.
11. Click Update Driver, then click Browse the computer to find the driver program.
12. Select "**Let me pick from a list of device drivers on my computer**".
13. Click the Have Disk button. By clicking the Browse button, browse and point to the following path:

    X:\Monitor Drivers\Windows 10

    (where X indicates "the folder in which the downloaded driver is located" (such as a desktop)
14. Select the "**P24q-30.inf**" file and click the **Open** button. Click the **OK** button.
15. In the new window, select **Lenovo P24q-30** and click **Next**.
16. After the installation is complete, delete all downloaded files and close all windows.
17. Restart the system. The system will automatically select the maximum refresh rate and corresponding Color Matching Profiles.

Note: On LCD monitors, unlike CRTs, a faster refresh rate does not improve display quality. Lenovo recommends using either 2560 x 1440 at a refresh rate of 60 Hz, or 640 x 480 at a refresh rate of 60 Hz.

Installing the monitor driver in Windows 11

To use the Plug and Play feature in Microsoft Windows 11, do the following:

1. Turn off the computer and all attached devices.
2. Ensure that the monitor is connected correctly.
3. Turn on the monitor and then turn on the computer. Allow your computer to boot into Windows 11 operating system.
4. From the Lenovo website http://support.lenovo.com/docs/p24q_30, find the corresponding monitor driver and download it to a PC to which this monitor is connected (such as a desktop).
5. On the Desktop, move mouse to bottom-center of screen, right-click "Start", then click "device manager"
6. Find the "monitor" icon and click.
7. Right-click the" **Generic PnP monitor**"
8. Click Update Driver, then click Browse the computer to find the driver program.
9. Select "**Let me pick from a list of device drivers on my computer**".
10. Click the Have Disk button. By clicking the Browse button, browse and point to the following path:

    X:\Monitor Drivers\Windows 11

    (where X indicates "the folder in which the downloaded driver is located" (such as a desktop)
11. Select the "**P24q-30.inf**" file and click the **Open** button. Click the **OK** button.
12. In the new window, select **Lenovo P24q-30** and click **Next**.
13. After the installation is complete, delete all downloaded files and close all windows.
14. Restart the system. The system will automatically select the maximum refresh rate and corresponding Color Matching Profiles.

Note: On LCD monitors, unlike CRTs, a faster refresh rate does not improve display quality. Lenovo recommends using either 2560 x 1440 at a refresh rate of 60 Hz, or 640 x 480 at a refresh rate of 60 Hz.

Service information

Customer responsibilities

The warranty does not apply to a product which has been damaged due to accident, misuse, abuse, improper installation, usage not in accordance with product specifications and instructions, natural or personal disaster, or unauthorized alterations, repairs or modifications.

The following are examples of misuse or abuse and not covered by warranty:

- Images burned on to the screen of a CRT monitor. Burned image is preventable by utilizing a moving screen saver or power management.
- Physical damage to covers, bezel, base and cables.
- Scratches or punctures on monitor screens.

Getting further help

If you still can't solve your problem, please contact the Customer Support Centre. For more information on contacting the Customer Support Centre, please see Appendix A, "Service and Support" on page A-1.

Service parts

The following parts are for use by Lenovo service, or Lenovo authorized dealers to support the customer warranty. Parts are for service use only. The table below shows information for model 63B4-GAR6-WW.

Table 3-3. List of service parts

FRU (Field Replaceable Unit) Part number	Description	Colour	Machine Type Model (MTM)
5D11J31079	P24q-30 - 23.8 inch FRU Monitor (HDMI)	Raven Black	63B4-GAR6-WW
5C11J31075	P24q-30 USB Type-A to B cable 1.8m	Raven Black	63B4-GAR6-WW
5C11J31038	P24q-30 DP1.4 cable 1.8m FRU	Raven Black	63B4-GAR6-WW
5C11J31037	P24q-30 HDMI2.0 cable 1.8m FRU	Raven Black	63B4-GAR6-WW
5SE1J31076	P24q-30 - FRU Stand and Base	Raven Black	63B4-GAR6-WW

Appendix A. Service and Support

The following information describes the technical support that is available for your product, during the warranty period or throughout the life of the product. Refer to your Lenovo Statement of Limited Warranty for a fully explanation of Lenovo warranty terms.

Registering your option

Register to receive product service and support updates, as well as free and discounted computer Accessories and content. Go to:
http://www.lenovo.com/support

Online technical support

Online technical support is available during the life of your product through the Lenovo Support Web site at http://www.lenovo.com/ support

Product replacement assistance or exchange of defective components also is available during the warranty period, assistance for replacement or exchange of defective components is available. In addition, if your option is installed in a Lenovo computer, you might be entitled to service at your location. Your technical support

representative can help you determine the best alternative.

Telephone technical support

Installation and configuration support through the Customer Support Center will be withdrawn or made available for a fee, at Lenovo's discretion, 90 days after the option has been withdrawn from marketing, Additional support offerings, including step-by-step installation assistance, are available for a nominal fee.

To assist the technical support representative, have available as much of the following information as possible:

- Option name
- Option number
- Proof of purchase
- Computer manufacturer, model, serial number, and manual
- Exact wording of the error message (if any)
- Description of the problem
- Hardware and software configuration information for your system

If possible, be at your computer. Your technical support representative might want to walk you through the problem during the call.

Worldwide telephone list

Phone numbers are subject to change without notice. For the most current phone Numbers, go to http://www.lenovo.com/support/phone

Country or Region	Telephone Number
Argentina	0800-666-0011 (Spanish, English)
Australia	1-800-041-267 (English)
Austria	0810-100-654 (local phone) (German)
Belgium	Warrant service and support: 02-339-36-11 (Dutch, French)
Bolivia	0800-10-0189 (Spanish)
Brazil	Calls made from within the Sao Paulo region: 11-3889-8986 Calls made from outside the Sao Paulo region: 0800-701-4815 (Portuguese)
Brunei Darussalam	800-1111 (English)
Canada	1-800-565-3344 (English, French)
Chile	800-361-213 (Spanish)
China	Technical Support Line: 400-100-6000 (Mandarin)
China (Hong Kong S.A.R.)	(852) 3516-8977 (Cantonese, English, Mandarin)
China	0800-807 / (852) 3071-3559

Country or Region	Telephone Number
(Macau S.A.R.)	(Cantonese, English, Mandarin)
Colombia	1-800-912-3021 (Spanish)
Costa Rica	0-800-011-1029 (Spanish)
Croatia	385-1-3033-120(Croatian)
Cyprus	800-92537 (Greek)
Czech Republic	800-353-637 (Czech)
Denmark	Warranty service and support: 7010-5150 (Danish)
Dominican Republic	1-866-434-2080 (Spanish)
Ecuador	1-800-426911 (OPCION 4) (Spanish)
Egypt	Primary: 0800-0000-850 Secondary:0800-0000-744 (Arabic, English)
El Salvador	800-6264 (Spanish)
Estonia	372-66-0-800 (Estonian, Russian, English)
Finland	Warranty service and support: +358-800-1-4260(Finnish)
France	Warranty service and support (hardware): 0810-631-213(French)
Germany	Warranty service and support: 0800-500-4618 (toll-free) (German)
Greece	Lenovo Business Partner (Greek)
Guatemala	Dial 999-9190, wait for operator, and request to reach 877-404-9661 (Spanish)
Honduras	Dial 800-0123(Spanish)
Hungary	+36-13-825-716 (English, Hungarian)
India	Primary: 1800-419-4666 (Tata) Secondary: 1800-3000-8465 (Reliance) Email: commercialts@lenovo.com (English and Hindi)
Indonesia	1-803-442-425 62 213-002-1090 (Standard Charges Apply) (English, Bahasa Indonesia)
Ireland	Warranty service and support: 01-881-1444 (English)
Israel	Givat Shmuel Service and Center: +972-3-531-3900 (Hebrew, English)
Italy	Warranty service and support: +39-800-820094 (Italian)
Japan	0120-000-817 (Japanese, English)
Kazakhstan	77-273-231-427(Standard charges Apply) (Russian, English)
Korea	080-513-0880 (Collect Call) 02-3483-2829 (Toll Call) (Korean)
Latvia	371-6707-360(Latvian, Russian, English)
Lithuania	370 5278 6602(Italian, Russian, English)
Luxembourg	ThinkServer and ThinkStation: 352-360-385-343 ThinkCentre and ThinkPad: 352-360-385-222 (French)
Malaysia	1-800-88-0013 03-7724-8023 (Standard Charges Apply) (English)
Malta	356-21-445-566(English, Italian, Maltese Arabic)
Mexico	001-866-434-2080(Spanish)
Netherlands	020-513-3939 (Dutch)
New Zealand	0508-770-506 (English)
Nicaragua	001-800-220-2282 (Spanish)
Norway	8152-1550(Norwegian)

Country or Region	Telephone Number
Panama	Lenovo Customer Support Center: 001-866-434(Toll-Free) (Spanish)
Peru	0-800-50-866 (OPCION 2) (Spanish)
Philippines	1-800-8908-6454 (GLOBE subscribers) 1-800-1441-0719 (PLDT subscribers) (Tagalog, English)
Poland	Laptops and tablets branded with logo Think: 48-22-273-9777 ThinkStation and ThinkServer: 48-22-878-6999 (Polish, English)
Portugal	808-225-115 (Standard Charges Apply) (Portuguese)
Romania	4-021-224-4015(Romanian)
Russia	+7-499-705-6204 +7-495-240-8558 (Standard Charges Apply) (Russian)
Singapore	1-800-415-5529 6818-5315 (Standard Charges Apply) (English, Mandarin, Bahasa Malaysia)
Slovakia	ThinkStation and ThinkServer: 421-2-4954-5555
Slovenia	386-1-2005-60 (Slovenian)
Spain	34-917-147-833(Spanish)
Sri Lanka	+9477-7357-123 (Sumathi Information systems) (English)
Sweden	Warranty service and support: 077-117-1040 (Swedish)
Switzerland	Warranty service and support: 0800-55-54-54 (German, French, Italian)
Taiwan	0800-000-702 (Mandarin)
Thailand	001-800-4415-734 (+662) 787-3067 (Standard Charges Apply) (Thai, English)
Turkey	444-04-26 (Turkish)
United Kingdom	Standard warranty support: 03705-500-900 (local rate) Standard warranty support: 08705-500-900(English)
United States	1-800-426-7378 (English)
Uruguay	000-411-005-6649 (Spanish)
Venezuela	0-800-100-2011 (Spanish)
Vietnam	120-11072 (Toll Free) 84-8-4458-1042 (Standard Charges Apply) (Vietnamese, English)

Appendix B. Notices

Lenovo may not offer the products, services, or features discussed in this document in all countries. Consult your local Lenovo representative for information on the products and services currently available in your area. Any reference to a Lenovo product, program, or service is not intended to state or imply that only that Lenovo product, program, or service may be used. Any functionally equivalent product, program, or service that does not infringe any Lenovo intellectual property right may be used instead. However, it is the user's responsibility to evaluate and verify the operation of any other product, program, or service.

Lenovo may have patents or pending patent applications covering subject matter described in this document. The furnishing of this document does not give you any license to these patents. You can send license inquiries, in writing to:

Lenovo (United States),inc.
1009 Think Place – Building One
Morrisville, NC 27560
U.S.A.
Attention: Lenovo Director of Licensing

LENOVO PROVIDES THIS PUBLICATION "AS IS" WITHOUT WARRANTY OF ANY KIND, EITHER EXPRESS OR IMPLIED, INCLUDING, BUT NOT LIMITED TO THE IMPLIED WARRANTIES OF NON-INFRINGEMENT,

MERCHANTABILITY OR FITNESS FOR A PARTICULAR PURPOSE.

Some jurisdictions do not allow disclaimer of express or implied warranties in certain transactions, therefore, this statement may not apply to you.

This information could include technical inaccuracies or typographical errors. Changes are periodically made to the information herein; these changes will be incorporated in new editions of the publication. Lenovo may make improvements and/or changes in the product(s) and/or the program(s) described in this publication at any time without notice.

The products described in this document are not intended for use in implantation or other life support applications where malfunction may result in injury or death to persons. The information contained in this document does not affect or change Lenovo product specifications or warranties. Nothing in this document shall operate as an express or implied license or indemnity under the intellectual property rights of Lenovo or third parties. All information contained in this document was obtained from specific environments and presented as an illustration. The result obtained in other operating environments may vary.

Lenovo may use or distribute any of the information you supply in any way it believe appropriate without incurring any obligation to you.

Any references in this publication to non-Lenovo Web sites are provided for convenience only and do not in any manner serve as an endorsement of those Web sites. The materials at those Web sites are not part of the materials for this Lenovo product, and use of those Web sites is at your own risk.

Any performance data contained herein was determined in a controlled environment. Therefore, the result obtained in other operating environments may vary significantly. Some measurements may have been made on development-level systems and there is no guarantee that these measurements
will be the same on generally available systems. Furthermore, some measurements may have been estimated through extrapolation. Actual results may vary. Users of this document should verify the applicable data for their specific environment.

Recycling information

Lenovo encourage owners of information technology (IT) equipment to responsibly recycle their equipment when it is no longer needed. Lenovo offers a variety of programs and services to assist equipment owners in recycling their IT products. For information on recycling Lenovo products, go to:

www.lenovo.com/recycling

環境配慮に関して

本機器またはモニターの回収リサイクルについて

企業のお客様が、本機器が使用済みとなり廃棄される場合は、資源有効利用促進法の規定により、産業廃棄物として、地域を管轄する県知事あるいは、政令市長の許可を持った産業廃棄物処理業者に適正処理を委託する必要があります。また、弊社では資源有効利用促進法に基づき使用済みパソコンの回収および再利用・再資源化を行う「PC 回収リサイクル・サービス」を提供しています。詳細は、
https://www.lenovo.com/jp/ja/services_warranty/recycle/pcrecycle/をご参照ください。

また、同法により、家庭で使用済みとなったパソコンのメーカー等による回収再資源化が 2003 年 10 月 1 日よりスタートしました。詳細は、
https://www.lenovo.com/jp/ja/services_warranty/recycle/personal/をご参照ください。

重金属を含む内部部品の廃棄処理について

本機器のプリント基板等には微量の重金属（鉛など）が使用されています。使用後は適切な処理を行うため、上記「本機器またはモニターの回収リサイクルについて」に従って廃棄してください。

Collecting and recycling a disused Lenovo computer or monitor

If you are a company employee and need to dispose of a Lenovo computer or monitor that is the property of the company, you must do so in accordance with the Law for Promotion of Effective Utilization of Resources. Computers and monitors are categorized as industrial waste and should be properly disposed of by an industrial waste disposal contractor certified by a local government. In accordance with the Law for Promotion of Effective Utilization of Resources, Lenovo Japan provides, through its PC Collecting and Recycling Services, for the collecting, reuse, and recycling of disused computers and monitors. For details, visit the Lenovo Web site at

https://www.lenovo.com/jp/ja/services_warranty/recycle/pcrecycle/. Pursuant to the Law for Promotion of Effective Utilization of Resources, the collecting and recycling of home-used computers and monitors by the manufacturer was begun in October 1, 2003. This service is provided free of charge for home-used computers sold after October 1, 2003. For details, visit the Lenovo Web site at

https://www.lenovo.com/jp/ja/services_warranty/recycle/personal/.

Disposing of Lenovo computer components

Some Lenovo computer products sold in Japan may have components that contain heavy metals or other environmental sensitive substances. To properly dispose of disused components, such as a printed circuit board or drive, use the methods described above for collecting and recycling a disused computer or monitor.

Trademarks

The following terms are trademarks of Lenovo in the United States, other countries, or both:

Lenovo

The Lenovo logo

ThinkCentre

ThinkPad

ThinkVision

Microsoft, Windows, and Windows NT are trademarks of the Microsoft group of companies.

Other company, product, or service names may be trademarks or service marks of others.

Turkish statement of compliance

The Lenovo product meets the requirements of the Republic of Turkey Directive on the Restriction of the Use of Certain Hazardous Substances in Electrical and Electronic Equipment (EEE).

Türkiye EEE Yönetmeliğine Uygunluk Beyanı

Bu Lenovo ürünü, T.C. Çevre ve Orman Bakanlığı'nın “Elektrik ve Elektronik Eşyalarda Bazı Zararlı Maddelerin Kullanımının Sınırlandırılmasına Dair Yönetmelik (EEE)” direktiflerine uygundur.

EEE Yönetmeliğine Uygundur.

Lenovo and the Lenovo logo are trademarks of Lenovo in the United States, other countries, or both.

Ukraine RoHS

Цим підтверджуємо, що продукція Леново відповідає вимогам нормативних актів України, які обмежують вміст небезпечних речовин.

India RoHS

RoHS compliant as per E-Waste (Management & Handling) Rules,2011.

Power cords and power adapters

Use only the power cords and power adapters supplied by the product manufacturer. Do not use the ac power cord for other devices.