Kensington®

SmartFit® Easy Riser™ Notebook Cooling Stand

QUICK START GUIDE
GUIDE DE DEMARRAGE RAPIDE
KURZANLEITUNG
SNELSTARTGIDS
GUIDA RAPIDA
GUÍA RÁPIDA
GYORSKALAUZ
PŘÍRUČKA ZAČÍNÁME
SZYBKI START
КРАТКОЕ РУКОВОДСТВО ПОЛЬЗОВАТЕЛЯ
MANUAL DE INÍCIO RÁPIDO
دليل البدء السريع

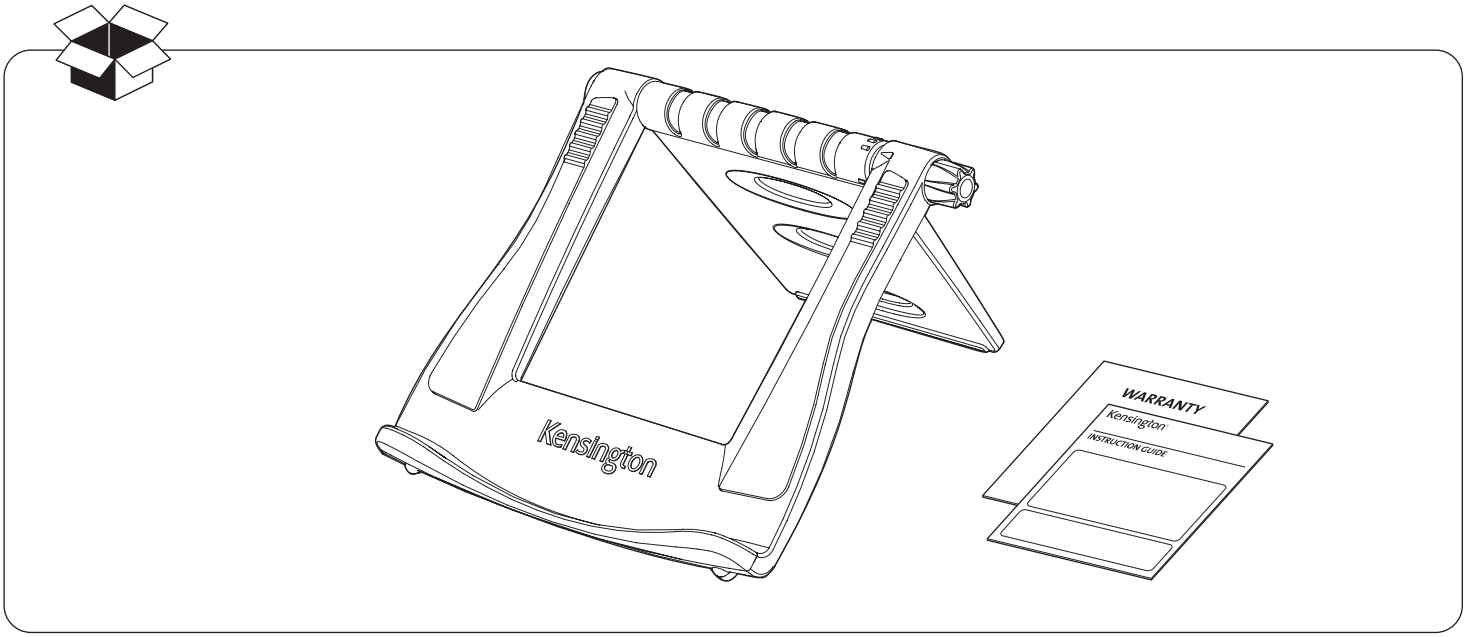

1

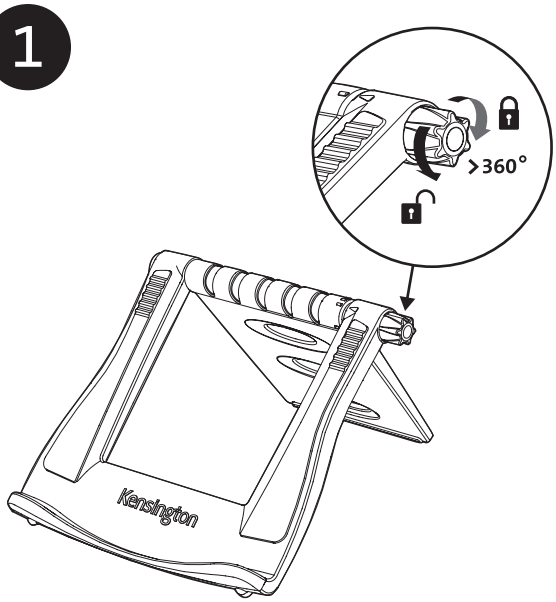

2

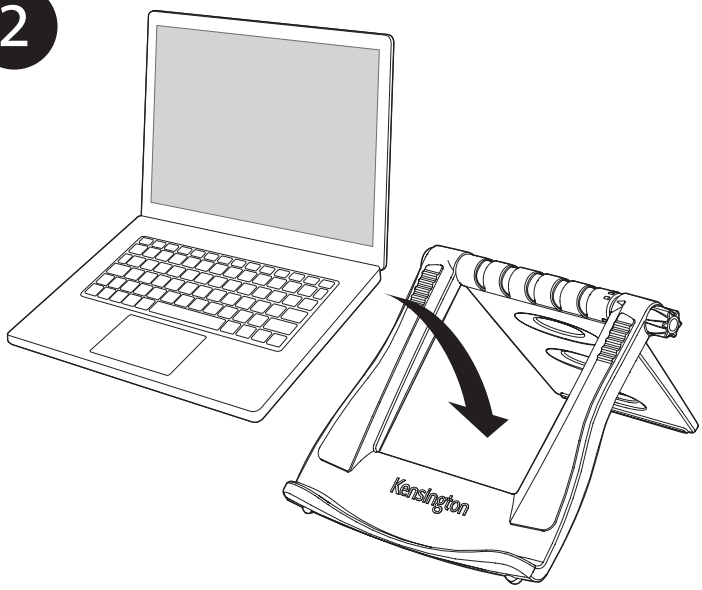

3

4

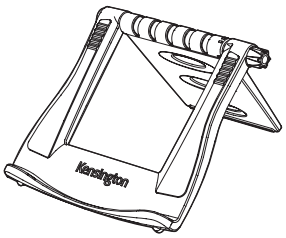

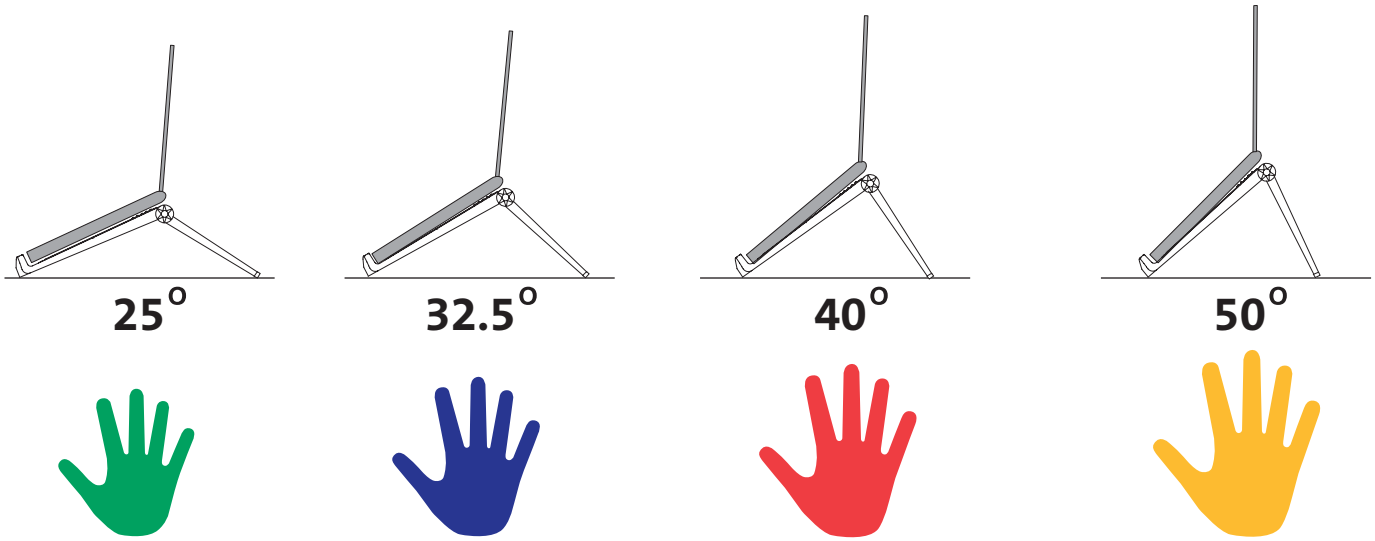

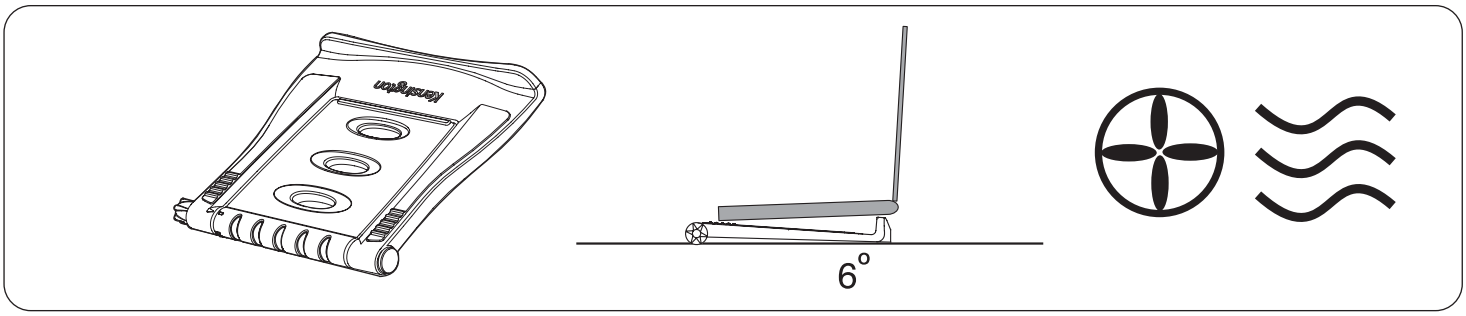

5

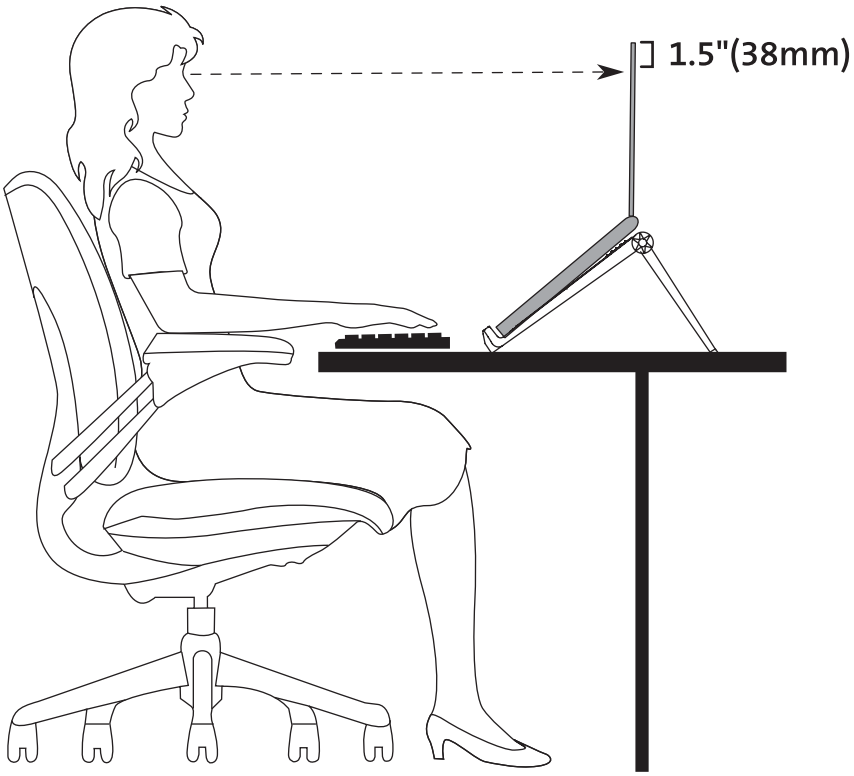

Register Now!
Enregistrer maintenant !
Jetzt registrieren!
Nu registreren
Registrar ahora
Registra adesso
Regisztràljon most!
Zaregistrujte se nyní!
Zarejestruj się!
Зарегистрироваться!
Registe-se agora!
سجل الآن!

register.kensington.com

Technical Support / Assistance technique / Technischer Support / Technische ondersteuning / Supporto tecnico / Asistencia técnica / Műszaki támogatás / Technická podpora / Pomoc techniczna / Техническая поддержка / Assistência técnica / الدعم الفني

Australia	1300 881 931	Hungary	06 20 9430 612	Portugal	800855802
België / Belgique	02 401 2395	Ireland	01 431 1395	Russia	007 495 933 5163
Brasil	14 3235-4003	Italia	02 3604 7030	Schweiz / Suisse	044 580 6667
Canada	1 800 268 3447	México	55 15 00 57 00	Sweden	08 5033 6577
Denmark	80 250966	Nederland	010 713 1882	United Kingdom	0203 364 5390
Deutschland	0692 222 3654	New Zealand	0800 539 26273	United States	1 800 535 4242
España	911 146 735	Norway	80017520	International Toll	+31 53 484 9135
Finland	0800 9 15697	Österreich	0800 677 873		
France	01 7671 0404	Polska	22 570 18 00		

Kensington and the ACCO name and design are registered trademarks of ACCO Brands. SmartFit is a registered trade mark of ACCO Brands. Easy Riser is a trade mark of ACCO Brands.All other registered and unregistered trademarks are the property of their respective owners.

©2016 Kensington Computer Products Group, a division of ACCO Brands. Any unauthorized copying, duplicating, or other reproduction of the contents hereof is prohibited without written consent from Kensington Computer Products Group. All rights reserved. 07/16

Kensington Computer Products Group
A Division of ACCO Brands
1500 Fashion Island Blvd, 3rd Floor
San Mateo, CA 94404

ACCO Brands Europe
A Division of ACCO Brands Europe
Oxford House, Oxford Road
Aylesbury, Buckinghamshire,
HP21 8SZ
United Kingdom

www.kensington.com

ACCO Brands Canada Inc
7381 Bramalea Rd
Mississauga,
ON L5S 1C4
Canada

ACCO Australia
Level 2, 8 Lord St
Botany NSW 2019
Australia

Importado por ACCO Mexicana S.A. de C.V.
Circuito de la Industria Norte # 6,
Corredor Industrial Toluca Lerma,
Lerma México Cp. 52004
R.F.C. AME640229-1W3

Acco Brands Chile S.A.,
Avda. San Josemaría
Escrivá de Balaguer Nº5773
Vitacura, C.P. 7640970
Santiago, Chile

Importado e Distribuído por:
TILIBRA PRODUTOS DE PAPELARIA LTDA.
CNPJ: 44.990.901/0001-43
Rua Aymorés, 6-9 – Bauru/SP – Brasil
CEP 17013-900

K60112 / K52788

901-2066-02