ASUS

# Pro WS W680-ACE

# Pro WS W680-ACE IPMI

Motherboard

E21247
First Edition
October 2022

**Copyright © 2022 ASUSTeK COMPUTER INC. All Rights Reserved.**

No part of this manual, including the products and software described in it, may be reproduced, transmitted, transcribed, stored in a retrieval system, or translated into any language in any form or by any means, except documentation kept by the purchaser for backup purposes, without the express written permission of ASUSTeK COMPUTER INC. (“ASUS”).

Product warranty or service will not be extended if: (1) the product is repaired, modified or altered, unless such repair, modification of alteration is authorized in writing by ASUS; or (2) the serial number of the product is defaced or missing.

ASUS PROVIDES THIS MANUAL “AS IS” WITHOUT WARRANTY OF ANY KIND, EITHER EXPRESS OR IMPLIED, INCLUDING BUT NOT LIMITED TO THE IMPLIED WARRANTIES OR CONDITIONS OF MERCHANTABILITY OR FITNESS FOR A PARTICULAR PURPOSE. IN NO EVENT SHALL ASUS, ITS DIRECTORS, OFFICERS, EMPLOYEES OR AGENTS BE LIABLE FOR ANY INDIRECT, SPECIAL, INCIDENTAL, OR CONSEQUENTIAL DAMAGES (INCLUDING DAMAGES FOR LOSS OF PROFITS, LOSS OF BUSINESS, LOSS OF USE OR DATA, INTERRUPTION OF BUSINESS AND THE LIKE), EVEN IF ASUS HAS BEEN ADVISED OF THE POSSIBILITY OF SUCH DAMAGES ARISING FROM ANY DEFECT OR ERROR IN THIS MANUAL OR PRODUCT.

SPECIFICATIONS AND INFORMATION CONTAINED IN THIS MANUAL ARE FURNISHED FOR INFORMATIONAL USE ONLY, AND ARE SUBJECT TO CHANGE AT ANY TIME WITHOUT NOTICE, AND SHOULD NOT BE CONSTRUED AS A COMMITMENT BY ASUS. ASUS ASSUMES NO RESPONSIBILITY OR LIABILITY FOR ANY ERRORS OR INACCURACIES THAT MAY APPEAR IN THIS MANUAL, INCLUDING THE PRODUCTS AND SOFTWARE DESCRIBED IN IT.

Products and corporate names appearing in this manual may or may not be registered trademarks or copyrights of their respective companies, and are used only for identification or explanation and to the owners’ benefit, without intent to infringe.

# Contents

**Safety information** ..... **v**
**About this guide** ..... **vi**
**Pro WS W680-ACE specifications summary** ..... **vii**
**Package contents** ..... **xii**

**Chapter 1: Product Introduction**
**1.1 Before you proceed** ..... **1-1**
**1.2 Motherboard layout** ..... **1-2**

**Chapter 2: Basic Installation**
**2.1 Building your PC system** ..... **2-1**
2.1.1 CPU installation ..... 2-1
2.1.2 Cooling system installation ..... 2-3
2.1.3 DIMM installation ..... 2-6
2.1.4 M.2 installation ..... 2-7
2.1.5 Motherboard installation ..... 2-13
2.1.6 ATX power connection ..... 2-14
2.1.7 SATA device connection ..... 2-16
2.1.8 SlimSAS connection ..... 2-16
2.1.9 Front I/O connector ..... 2-17
2.1.10 Expansion card installation ..... 2-18
2.1.11 M.2 Wi-Fi module and antenna installation ..... 2-20
**2.2 BIOS update utility** ..... **2-21**
**2.3 Motherboard rear and audio connections** ..... **2-23**
2.3.1 Rear I/O connection ..... 2-23
2.3.2 Audio I/O connections ..... 2-25
**2.4 Starting up for the first time** ..... **2-27**
**2.5 Turning off the computer** ..... **2-27**

**Chapter 3: BIOS and RAID Support**
**3.1 Knowing BIOS** ..... **3-1**
**3.2 BIOS setup program** ..... **3-2**
**3.3 ASUS EZ Flash 3** ..... **3-3**
**3.4 ASUS CrashFree BIOS 3** ..... **3-4**
**3.5 RAID configurations** ..... **3-5**

## Appendix

**Q-Code table** ..... **A-1**
**Notices** ..... **A-5**
**Warranty** ..... **A-10**
**ASUS contact information** ..... **A-12**
**Service and Support** ..... **A-12**

# Safety information

## Electrical safety

- To prevent electrical shock hazard, disconnect the power cable from the electrical outlet before relocating the system.
- When adding or removing devices to or from the system, ensure that the power cables for the devices are unplugged before the signal cables are connected. If possible, disconnect all power cables from the existing system before you add a device.
- Before connecting or removing signal cables from the motherboard, ensure that all power cables are unplugged.
- Seek professional assistance before using an adapter or extension cord. These devices could interrupt the grounding circuit.
- Ensure that your power supply is set to the correct voltage in your area. If you are not sure about the voltage of the electrical outlet you are using, contact your local power company.
- If the power supply is broken, do not try to fix it by yourself. Contact a qualified service technician or your retailer.

## Operation safety

- Before installing the motherboard and adding devices on it, carefully read all the manuals that came with the package.
- Before using the product, ensure all cables are correctly connected and the power cables are not damaged. If you detect any damage, contact your dealer immediately.
- To avoid short circuits, keep paper clips, screws, and staples away from connectors, slots, sockets and circuitry.
- Avoid dust, humidity, and temperature extremes. Do not place the product in any area where it may become wet.
- Place the product on a stable surface.
- If you encounter technical problems with the product, contact a qualified service technician or your retailer.
- Your motherboard should only be used in environments with ambient temperatures between 0°C and 40°C.

## Button/Coin Batteries Safety Information

**WARNING**

**KEEP OUT OF REACH OF CHILDREN**
Swallowing can lead to chemical burns, perforation of soft tissue, and death. Severe burns can occur within 2 hours of ingestion. Seek medical attention immediately.

# About this guide

This user guide contains the information you need when installing and configuring the motherboard.

## How this guide is organized

This guide contains the following parts:

- **Chapter 1: Product Introduction**

  This chapter describes the features of the motherboard and the new technology it supports. It includes description of the switches, jumpers, and connectors on the motherboard.

- **Chapter 2: Basic Installation**

  This chapter lists the hardware setup procedures that you have to perform when installing system components.

- **Chapter 3: BIOS and RAID Support**

  This chapter tells how to boot into the BIOS, upgrade BIOS using the EZ Flash Utility and support on RAID.

## Where to find more information

Refer to the following sources for additional information and for product and software updates.

1. **ASUS website**

   The ASUS website (www.asus.com) provides updated information on ASUS hardware and software products.

2. **Optional documentation**

   Your product package may include optional documentation, such as warranty flyers, that may have been added by your dealer. These documents are not part of the standard package.

## Conventions used in this guide

To ensure that you perform certain tasks properly, take note of the following symbols used throughout this user guide.

**CAUTION:** Information to prevent damage to the components and injuries to yourself when trying to complete a task.

**IMPORTANT:** Instructions that you MUST follow to complete a task.

**NOTE:** Tips and additional information to help you complete a task.

# Pro WS W680-ACE specifications summary

| | |
|---|---|
| **CPU** | Intel® Socket LGA1700 for 13th Gen Intel® Core™ Processors & 12th Gen Intel® Core™, Pentium® Gold and Celeron® Processors<br>Supports Intel® Turbo Boost Technology 2.0 and Intel® Turbo Boost Max Technology 3.0**<br>*** Refer to www.asus.com for CPU support list.**<br>**** Intel® Turbo Boost Max Technology 3.0 support depends on the CPU types.** |
| **Chipset** | Intel® W680 Chipset |
| **Memory** | 4 x DIMM, Max. 128GB, DDR5 6000(OC) / 5800(OC) / 5600(OC) / 5400(OC) / 5200(OC) / 5000(OC) / 4800 Non-ECC, Un-buffered Memory*<br>4 x DIMM, Max. 128GB, DDR5 4800 ECC Memory<br>Dual Channel Memory Architecture<br>Supports Intel® Extreme Memory Profile (XMP)<br>OptiMem II<br>*** Supported memory types, data rate(Speed), and number of DRAM modules vary depending on the CPU and memory configuration, for more information refer to www.asus.com for memory support list.**<br>*** Non-ECC, un-buffered DDR5 memory supports On-Die ECC function.** |
| **Graphics** | 1 x DisplayPort**<br>1 x HDMI® port***<br>1 x VGA port<br>*** Graphics specifications may vary between CPU types. Please refer to www.intel.com for any updates.**<br>**** Supports max. 8K@60Hz as specified in DisplayPort 1.4.**<br>***** Supports 4K@60Hz as specified in HDMI 2.1.** |
| **Expansion Slots** | **Intel® 13th & 12th Gen Processors***<br>- 2 x PCIe 5.0 x16 slots (support x16 or x8/x8 mode)<br>**Intel® W680 Chipset**<br>- 2 x PCIe 3.0 x16 slots (supports x4 mode)<br>- 1 x PCIe 3.0 x1 slot<br>*** Please check the PCIe bifurcation table at the support site (https://www.asus.com/support/FAQ/1037507/).**<br>To ensure compatibility of the device installed, please refer to https://www.asus.com/support/ for the list of supported peripherals. |
| **Storage** | **Total supports 3 x M.2 slots and 8 x SATA 6Gb/s ports***<br>**Intel® 13th & 12th Gen Processors**<br>- M.2_1 slot (Key M), type 2242/2260/2280 (supports PCIe 4.0 x4 mode) |

*(continued on the next page)*

# Pro WS W680-ACE specifications summary

| | |
|---|---|
| **Storage** | **Intel® W680 Chipset**<br>- M.2_2 slot (Key M), type 2242/2260/2280 (supports PCIe 4.0 x4 mode)<br>- M.2_3 slot (Key M), type 2242/2260/2280/22110 (supports PCIe 4.0 x4 mode)<br>- 4 x SATA 6Gb/s ports<br>- 1 x SlimSAS Slot Support SlimSAS NVMe device (supports PCIe 4.0 x4 mode), up to 4 SATA devices***<br>*** Intel® Rapid Storage Technology supports PCIe RAID 0/1/5/10, SATA RAID 0/1/5/10.**<br>**** Intel® Rapid Storage Technology supports Intel® Optane Memory H Series on PCH attached M.2 slots.**<br>***** SlimSAS slot can support up to 4 SATA devices via a transfer cable. The cable is purchased separately.** |
| **Ethernet** | 2 x Intel® 2.5Gb Ethernet<br>ASUS LANGuard |
| **Wireless & Bluetooth®** | M.2 slot only (Key E, CNVi & PCIe)*<br>*** Wi-Fi module is sold separately.** |
| **USB** | **Rear USB (Total 8 ports)**<br>- 2 x USB 3.2 Gen 2 ports (1 x Type-A, 1 x Type-C®)<br>- 4 x USB 3.2 Gen 1 ports (4 x Type-A)<br>- 2 x USB 2.0 ports (2 x Type-A)<br>**Front USB (Total 7 ports)**<br>- 1 x USB 3.2 Gen 2x2 connector (supports USB Type-C®)<br>- 1 x USB 3.2 Gen 1 header supports additional 2 USB 3.2 Gen 1 ports<br>- 2 x USB 2.0 headers support additional 4 USB 2.0 ports |
| **Audio** | **Realtek 7.1 Surround Sound High Definition Audio CODEC**<br>- Supports: Jack-detection, Multi-streaming, Front Panel Jack-retasking<br>- Supports up to 24-Bit/192 kHz playback<br>**Audio Features**<br>- Audio Shielding<br>- Premium audio capacitors<br>- Dedicated audio PCB layers<br>- Unique de-pop circuit |
| **Back Panel I/O Ports** | 2 x USB 3.2 Gen 2 ports (1 x Type-A, 1 x Type-C®)<br>4 x USB 3.2 Gen 1 ports (4 x Type-A)<br>2 x USB 2.0 ports (2 x Type-A)<br>1 x DisplayPort<br>1 x HDMI® port<br>1 x VGA port<br>2 x Intel® 2.5Gb Ethernet ports<br>5 x Audio jacks<br>1 x BIOS FlashBack™ button |

*(continued on the next page)*

# Pro WS W680-ACE specifications summary

| | |
|---|---|
| **Internal I/O connectors** | **Fan and Cooling related**<br>1 x 4-pin CPU Fan header<br>1 x 4-pin CPU OPT Fan header<br>1 x 4-pin W_PUMP+ header<br>3 x 4-pin Chassis Fan headers<br>**Power related**<br>1 x 24-pin Main Power connector<br>1 x 8-pin +12V Power connector<br>1 x 4-pin +12V Power connector<br>1 x 6-pin PCIe Power connector<br>**Storage related**<br>3 x M.2 slots (Key M)<br>4 x SATA 6Gb/s ports<br>1 x SlimSAS port<br>**USB**<br>1 x USB 3.2 Gen 2x2 connector (supports USB Type-C®)<br>1 x USB 3.2 Gen 1 header supports 2 additional USB 3.2 Gen 1 ports<br>2 x USB 2.0 headers support 4 additional USB 2.0 ports<br>**Miscellaneous**<br>1 x BMC Header<br>1 x Clear CMOS header<br>1 x COM Port header<br>1 x FlexKey button<br>1 x Front Panel Audio header (AAFP)<br>1 x LPT header<br>1 x LPT_P80 switch<br>1 x M.2 slot (Key E)<br>1 x SPI TPM header<br>1 x Start button<br>1 x 20-3 pin System Panel header with Chassis intrude function<br>1 x Thermal Sensor header<br>1 x Thunderbolt™ header |
| **Special Features** | **ASUS 5X PROTECTION III**<br>- DIGI+ VRM (Digital power design with DrMOS)<br>- ESD Guards<br>- LANGuard<br>- Overvoltage Protection<br>- SafeSlot<br>- Stainless-Steel Back I/O |

*(continued on the next page)*

# Pro WS W680-ACE specifications summary

| | |
|---|---|
| **Special Features** | **ASUS Q-Design**<br>- M.2 Q-Latch<br>- Q-Code<br>- Q-Connector<br>- Q-DIMM<br>- Q-LED (CPU [red], DRAM [yellow], VGA [white], Boot Device [yellow green])<br>- Q-Slot<br>**ASUS Thermal Solution**<br>- M.2 heatsink<br>- VRM heatsink design<br>**ASUS EZ DIY**<br>- CPU Socket lever protector<br>- SafeDIMM<br>- SafeSlot<br>- BIOS FlashBack™ button<br>- BIOS FlashBack™ LED<br>**Bespoke Motherboard Design & Business Focused Features**<br>- 24/7 Reliability |
| **Software Features** | **ASUS Exclusive Software**<br>Armoury Crate<br>- Fan Xpert 4<br>- Power Saving<br>ASUS CPU-Z<br>Norton 360 Deluxe (60 Days Free Trial)<br>WinRAR<br>IT Management software supported<br>- ASUS Control Center Express(ACCE)<br>**UEFI BIOS**<br>ASUS EZ DIY<br>- ASUS CrashFree BIOS 3<br>- ASUS EZ Flash 3<br>FlexKey |
| **BIOS** | 256 Mb Flash ROM, UEFI AMI BIOS |
| **Manageability** | WOL by PME, PXE |
| **Operating System** | Windows® 11<br>Windows® 10 64-bit |
| **Form Factor** | ATX Form Factor<br>12 inch x 9.6 inch (30.5 cm x 24.4 cm) |

- Specifications are subject to change without notice. Please refer to the ASUS website for the latest specifications.
- For more information on downloading and installing drivers and utilities for your motherboard, please scan the QR code below:

# Package contents

Check your motherboard package for the following items.

| | |
|---|---|
| Motherboard | 1 x Pro WS W680-ACE IPMI motherboard or<br>1 x Pro WS W680-ACE motherboard |
| Cables | 2 x SATA 6Gb/s cables |
| IPMI Expansion Card and related accessories*<br>* **This item or package is only available for Pro WS W680-ACE IPMI.** | 1 x IPMI expansion card<br>1 x BMC cable<br>1 x Power On/Off cable<br>1 x Reset cable<br>1 x USB 2.0 cable<br>1 x IPMI Expansion Card user guide |
| Miscellaneous | 1 x Q-connector<br>1 x M.2 rubber package<br>2 x Screw packages for M.2 SSD |
| Documentation | 1 x User guide<br>1 x ACC Express Activation Key Card |

If any of the above items is damaged or missing, contact your retailer.

# Product Introduction

1

## 1.1 Before you proceed

Take note of the following precautions before you install motherboard components or change any motherboard settings.

- Unplug the power cord from the wall socket before touching any component.
- Before handling components, use a grounded wrist strap or touch a safely grounded object or a metal object, such as the power supply case, to avoid damaging them due to static electricity.
- Hold components by the edges to avoid touching the ICs on them.
- Whenever you uninstall any component, place it on a grounded antistatic pad or in the bag that came with the component.
- Before you install or remove any component, ensure that the ATX power supply is switched off or the power cord is detached from the power supply. Failure to do so may cause severe damage to the motherboard, peripherals, or components.

- The pin definitions in this chapter are for reference only. The pin names depend on the location of the header/jumper/connector.
- For more information on installing your motherboard, please scan the QR code below:

## 1.2 Motherboard layout

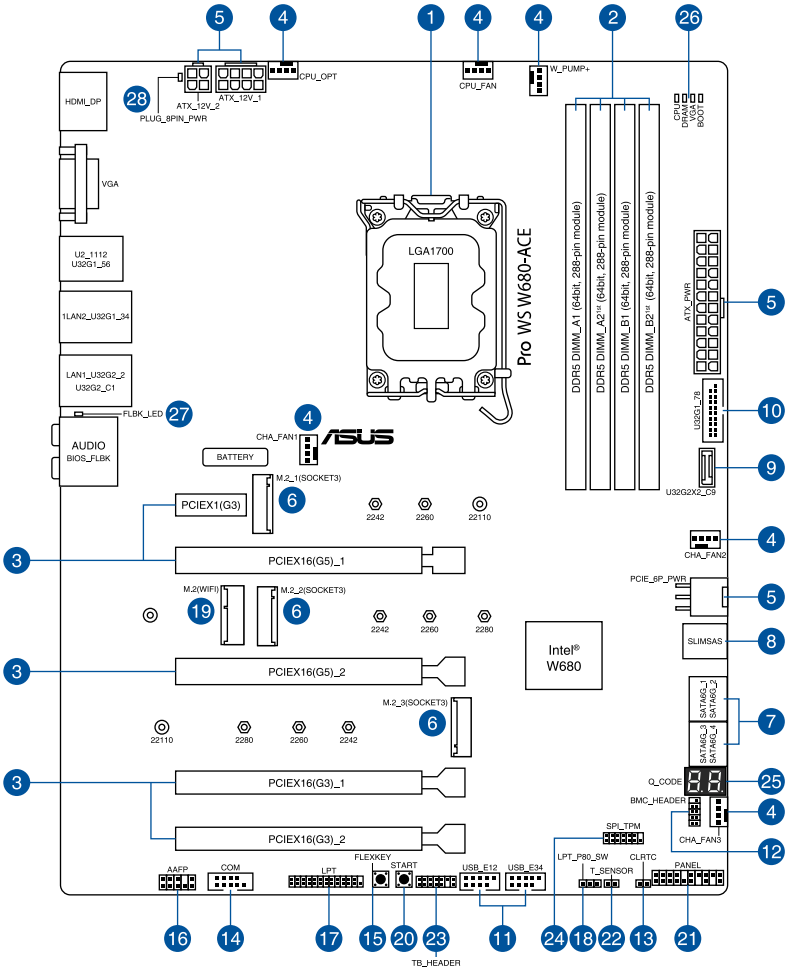

| Layout contents | Page |
|---|---|
| 1. CPU socket | 1-4 |
| 2. DIMM slots | 1-5 |
| 3. Expansion slots | 1-7 |
| 4. Fan headers | 1-9 |
| 5. Power connectors | 1-10 |
| 6. M.2 slot | 1-11 |
| 7. SATA 6GB/s port | 1-12 |
| 8. SlimSAS port | 1-13 |
| 9. USB 3.2 Gen 2x2 Type-C® Front Panel connector | 1-13 |
| 10. USB 3.2 Gen 1 header | 1-14 |
| 11. USB 2.0 connector | 1-15 |
| 12. BMC header | 1-16 |
| 13. Clear CMOS header | 1-17 |
| 14. COM Port header | 1-18 |
| 15. FlexKey button (Reset) | 1-19 |
| 16. Front Panel Audio header | 1-20 |
| 17. LPT header | 1-20 |
| 18. LPT and Q-Code Switch header | 1-21 |
| 19. M.2 slot (Key E) | 1-21 |
| 20. Start button | 1-22 |
| 21. System Panel header | 1-23 |
| 22. Thermal Sensor header | 1-24 |
| 23. Thunderbolt™ header | 1-25 |
| 24. TPM header | 1-26 |
| 25. Q-Code LED | 1-26 |
| 26. Q LEDs | 1-27 |
| 27. BIOS FlashBack™ LED | 1-2 |
| 28. 8-pin Power Plug LED | 1-28 |

## 1. CPU socket

The motherboard comes with a LGA1700 socket designed for 13th Gen Intel® Core™ Processors & 12th Gen Intel® Core™, Pentium® Gold and Celeron® Processors.

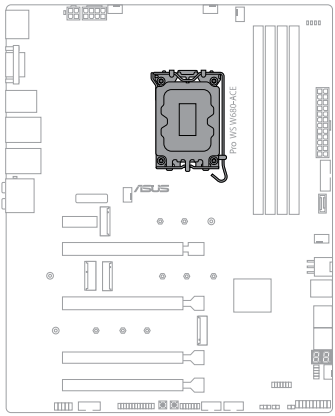


LGA1700

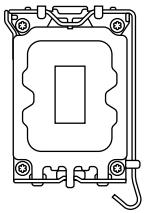

- Ensure that you install the correct CPU designed for LGA1700 socket only. DO NOT install a CPU designed for other sockets on the LGA1700 socket.
- The CPU fits in only one correct orientation. DO NOT force the CPU into the socket to prevent bending the connectors on the socket and damaging the CPU.
- Ensure that all power cables are unplugged before installing the CPU.
- Upon purchase of the motherboard, ensure that the PnP cap is on the socket and the socket contacts are not bent. Contact your retailer immediately if the PnP cap is missing, or if you see any damage to the PnP cap/socket contacts/motherboard components. ASUS will shoulder the cost of repair only if the damage is shipment/transit-related.
- Keep the cap after installing the motherboard. ASUS will process Return Merchandise Authorization (RMA) requests only if the motherboard comes with the cap on the socket.
- The product warranty does not cover damage to the socket contacts resulting from incorrect CPU installation/removal, or misplacement/loss/incorrect removal of the PnP cap.

## 2. DIMM slots

The motherboard comes with Dual Inline Memory Modules (DIMM) slots designed for DDR5 (Double Data Rate 5) memory modules.

A DDR5 memory module is notched differently from a DDR, DDR2, DDR3, or DDR4 module. DO NOT install a DDR, DDR2, DDR3, or DDR4 memory module to the DDR5 slot.

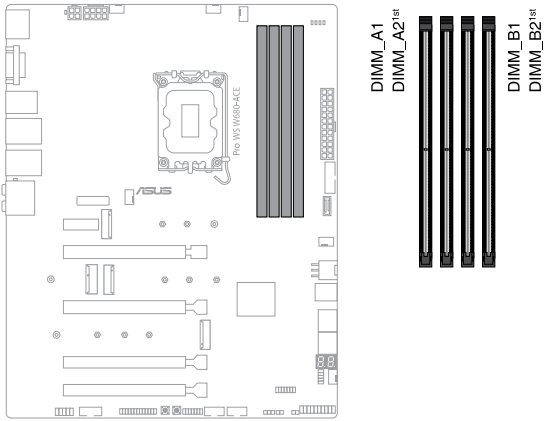


### Recommended memory configurations

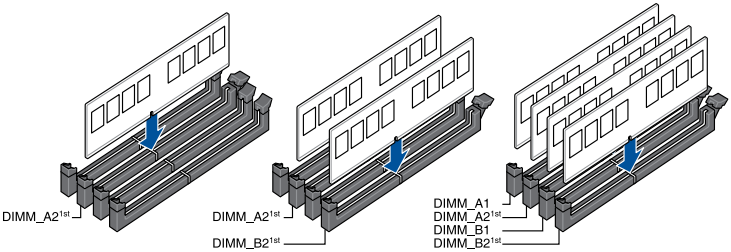

## Memory configurations

You may install 8GB, 16GB, and 32GB unbuffered and non-ECC DDR5 DIMMs into the DIMM sockets.

You may install varying memory sizes in Channel A and Channel B. The system maps the total size of the lower-sized channel for the dual-channel configuration. Any excess memory from the higher-sized channel is then mapped for single-channel operation.

- The default memory operation frequency is dependent on its Serial Presence Detect (SPD), which is the standard way of accessing information from a memory module. Under the default state, some memory modules for overclocking may operate at a lower frequency than the vendor-marked value.
- For system stability, use a more efficient memory cooling system to support a full memory load or overclocking condition.
- Always install the DIMMS with the same CAS Latency. For an optimum compatibility, we recommend that you install memory modules of the same version or data code (D/C) from the same vendor. Check with the vendor to get the correct memory modules.
- Visit the ASUS website for the latest QVL.

## 3. Expansion slots

Unplug the power cord before adding or removing expansion cards. Failure to do so may cause you physical injury and damage motherboard components.

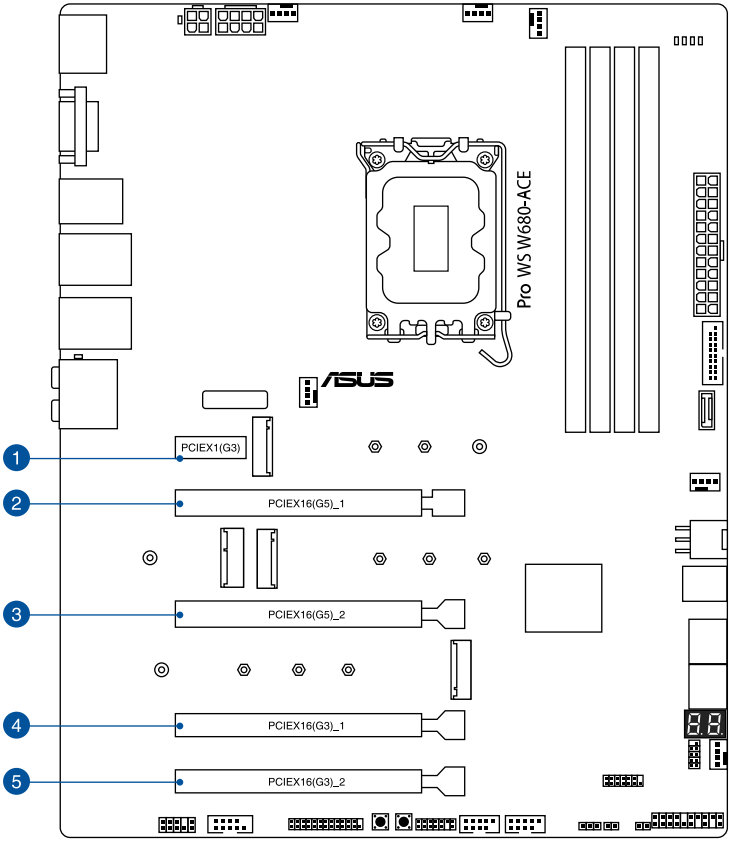


- Additional PCIe bifurcation and M.2 settings for RAID function are also supported when a Hyper M.2 x16 series card is installed.
- For full details on the PCIe bifurcation, you may visit the support site at https://www.asus.com/support/FAQ/1037507/.
- The Hyper M.2 X16 series card is sold separately.
- Adjust the PCIe bifurcation under BIOS settings.

Please refer to the following tables for the recommended VGA configuration and PCIe bifurcation configuration.

### Recommended VGA configuration

| Slot Description | | Single VGA | Dual VGA | Triple VGA | Quad VGA |
|---|---|---|---|---|---|
| 2 | PCIEX16(G5)_1 | x16 | x8 | x8 | x8 |
| 3 | PCIEX16(G5)_2 | - | x8 | x8 | x8 |
| 4 | PCIEX16(G3)_1 | - | - | x4 | x4 |
| 5 | PCIEX16(G3)_2 | - | - | - | x4 |

- Connect a chassis fan to the chassis fan connectors when using multiple graphics cards for better thermal environment.
- When installing a dual VGA card, we recommend selecting a chassis case which supports 7 or more expansion slots

### PCIe bifurcation & M.2 settings in PCIe x16 slots (from CPU)

| Slot Description | | Quantity of identifiable Intel M.2 SSD (pcs) | | |
|---|---|---|---|---|
| | | Situation 1 | Situation 2 | Situation 3 |
| 2 | PCIEX16(G5)_1 | 1 (x16) | 2 (x8 + x8) | 1 (x8) |
| 3 | PCIEX16(G5)_2 | - | - | 1 (x8) |
| 4 | PCIEX16(G3)_1 | 1 (x4) | 1 (x4) | 1 (x4) |
| 5 | PCIEX16(G3)_2 | 1 (x4) | 1 (x4) | 1 (x4) |

### 4. Fan and Pump headers

The Fan and Pump headers allow you to connect fans or pumps to cool the system.

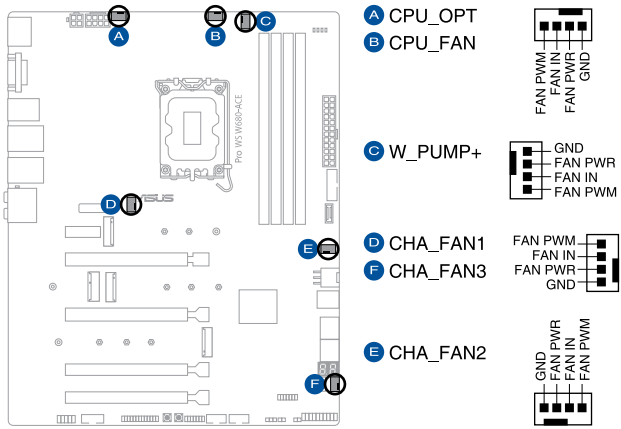


- DO NOT forget to connect the fan cables to the fan headers. Insufficient air flow inside the system may damage the motherboard components. These are not jumpers! Do not place jumper caps on the fan headers!
- Ensure the cable is fully inserted into the header.

For water cooling kits, connect the pump connector to the **W_PUMP+** header.

| Header | Max. Current | Max. Power | Default Speed | Shared Control |
|---|---|---|---|---|
| CPU_FAN | 1A | 12W | Q-Fan Controlled | A |
| CPU_OPT | 1A | 12W | Q-Fan Controlled | A |
| CHA_FAN1 | 1A | 12W | Q-Fan Controlled | - |
| CHA_FAN2 | 1A | 12W | Q-Fan Controlled | - |
| CHA_FAN3 | 1A | 12W | Q-Fan Controlled | - |
| W_PUMP+ | 3A | 36W | Full Speed | - |

## 5. Power connectors

These Power connectors allow you to connect your motherboard to a power supply. The power supply plugs are designed to fit in only one orientation, find the proper orientation and push down firmly until the power supply plugs are fully inserted.

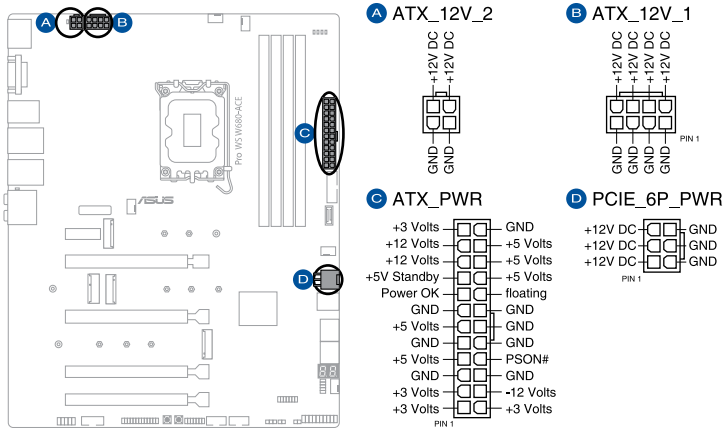


Ensure to connect the 8-pin power plug, or both the 8-pin and 4-pin power plugs.

- We recommend that you use a PSU with a higher power output when configuring a system with more power-consuming devices. The system may become unstable or may not boot up if the power is inadequate.
- For a fully configured system, we recommend that you use a power supply unit (PSU) that complies with ATX 12 V Specification 2.0 (or later version) and provides a minimum power of 350W.
- If you want to use two or more high-end PCI Express x16 cards, use an appropriate PSU which can supply the required power to ensure the system stability.

The **PCIE_6P_PWR** provides additional power for your PCIe X16 slots.

**6. M.2 slot**

The M.2 slot allows you to install M.2 SSD modules.

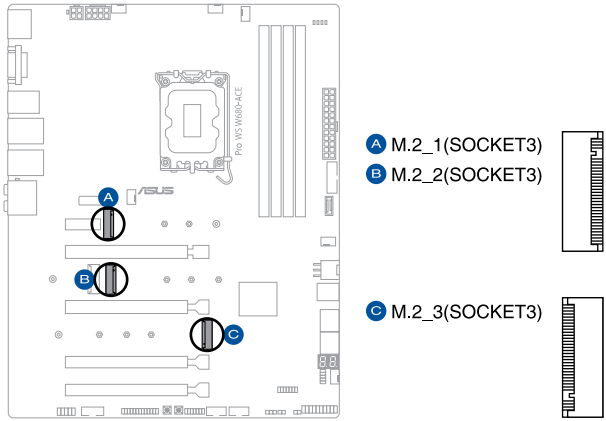


- **Intel® 13th & 12th Gen Processors:**
  - M.2_1 supports PCIE 4.0 x4 mode M Key design and type 2242 / 2260 / 2280 storage devices.
- **Intel® W680 Chipset:**
  - M.2_2 supports PCIE 4.0 x4 mode M Key design and type 2242 / 2260 / 2280 storage devices.
  - M.2_3 supports PCIE 4.0 x4 mode M Key design and type 2242 / 2260 / 2280 / 22110 storage devices.
- Intel® Rapid Storage Technology supports PCIe RAID 0/1/5/10, SATA RAID 0/1/5/10.

The M.2 SSD module is purchased separately.

**7. SATA 6Gb/s ports**

The SATA 6Gb/s ports allows you to connect SATA devices such as optical disc drives and hard disk drives via a SATA cable.

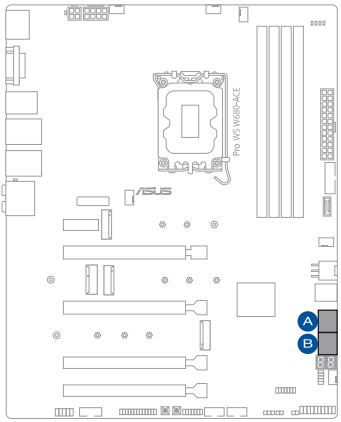


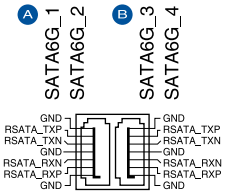


If you installed SATA storage devices to the **SATA6G_1-4** ports, you can create a RAID 0, 1, 5, and 10 configuration with the Intel® Rapid Storage Technology through the onboard Intel® W680 chipset.

Before creating a RAID set, refer to the **RAID Configuration Guide**. You can download the **RAID Configuration Guide** from the ASUS website.

**8. SlimSAS port**

The SlimSAS port allows you to connect PCIe 4.0 x4 NVM Express storage, and can support up to 4 SATA devices using a transfer cable.

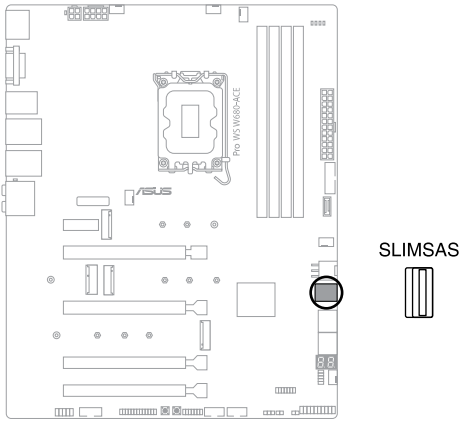


Cables are purchased separately.

**9. USB 3.2 Gen 2x2 Type-C® Front Panel connector**

The USB 3.2 Gen 2x2 Type-C® connector allows you to connect a USB 3.2 Gen 2x2 Type-C® module for additional USB 3.2 Gen 2x2 ports on the front panel. The USB 3.2 Gen 2x2 Type-C® connector provides data transfer speeds of up to 20 Gb/s.

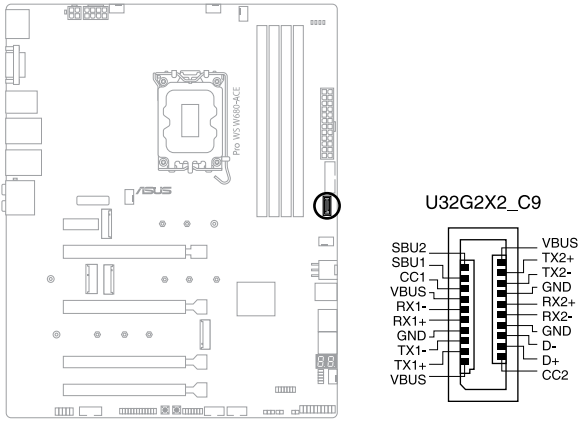


The USB 3.2 Gen 2x2 Type-C® module is purchased separately.

**10. USB 3.2 Gen 1 header**

The USB 3.2 Gen 1 header allows you to connect a USB 3.2 Gen 1 module for additional USB 3.2 Gen 1 ports. The USB 3.2 Gen 1 header provides data transfer speeds of up to 5 Gb/s.

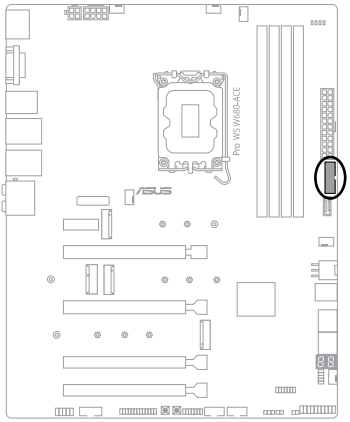


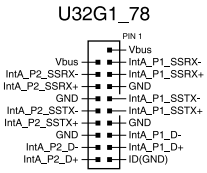


The USB 3.2 Gen 1 module is purchased separately.

**11. USB 2.0 header**

The USB 2.0 header allows you to connect a USB module for additional USB 2.0 ports. The USB 2.0 header provides data transfer speeds of up to 480 MB/s connection speed.

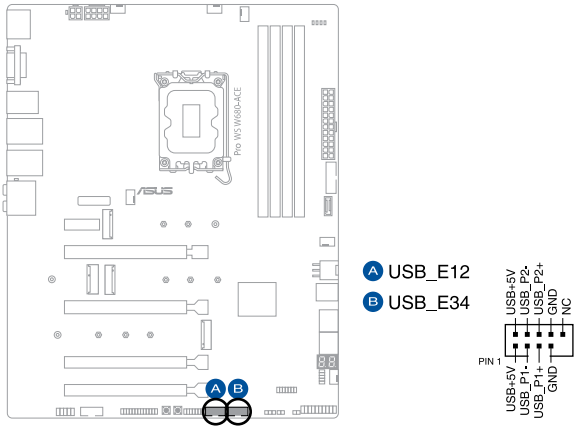


DO NOT connect a 1394 cable to the USB connectors. Doing so will damage the motherboard!

The USB 2.0 module is purchased separately.

**12. BMC header**

The BMC header allows you to connect and support an IPMI card.

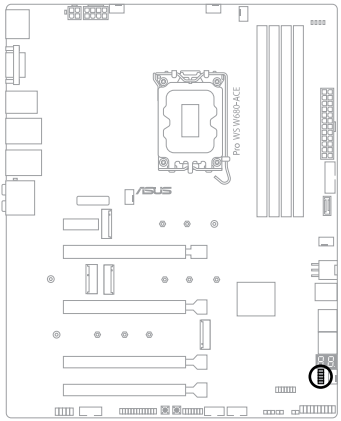


BMC_HEADER

- The IPMI card is purchased separately.
- For more information on the installation and information regarding the IPMI card, please visit www.asus.com.

**13. Clear CMOS header**

The Clear CMOS header allows you to clear the Real Time Clock (RTC) RAM in the CMOS, which contains the date, time, system passwords, and system setup parameters.

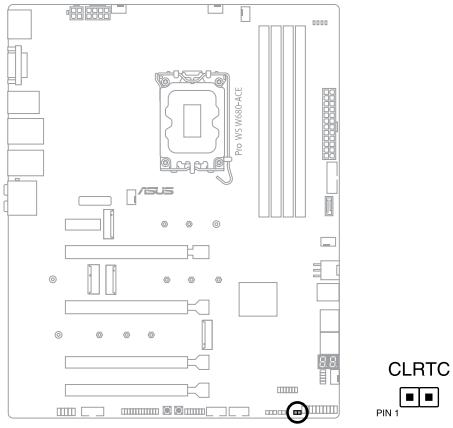


To erase the RTC RAM:

1. Turn OFF the computer and unplug the power cord.
2. Short-circuit pin 1-2 with a metal object or jumper cap for about 5-10 seconds.
3. Plug the power cord and turn ON the computer.
4. Hold down the <Del> key during the boot process and enter BIOS setup to re-enter data.

DO NOT short-circuit the pins except when clearing the RTC RAM. Short-circuiting or placing a jumper cap will cause system boot failure!

If the steps above do not help, remove the onboard button cell battery and short the two pins again to clear the CMOS RTC RAM data. After clearing the CMOS, reinstall the button cell battery.

**14. COM Port connector**

The COM (Serial) Port connector allows you to connect a COM port module. Connect the COM port module cable to this connector, then install the module to a slot opening on the system chassis.

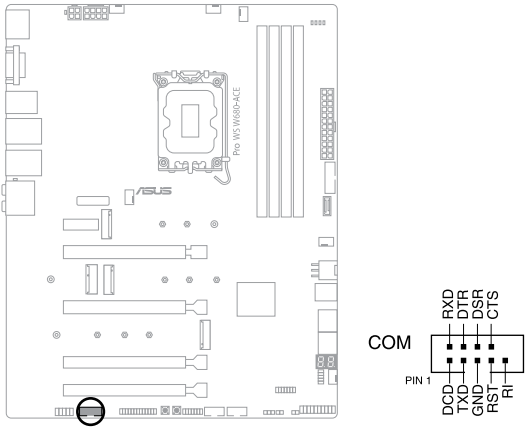


The COM port module is purchased separately.

**15. FlexKey button (Reset)**

Press the FlexKey button to reboot the system. You may also configure the button and assign a quick access feature such as activating Safe Boot to the button.

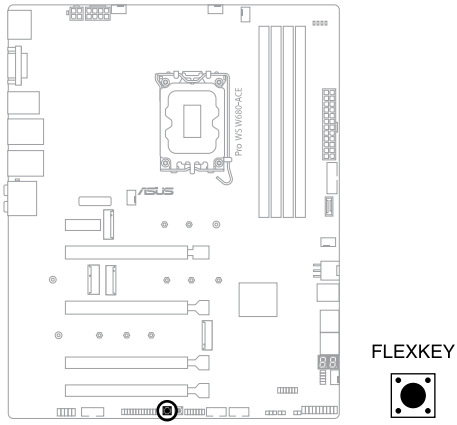


This button set to **[Reset]** by default. You can assign a different function to this button in the BIOS settings.

### 16. Front Panel Audio header

The Front Panel Audio header is for a chassis-mounted front panel audio I/O module that supports HD Audio. Connect one end of the front panel audio I/O module cable to this header.

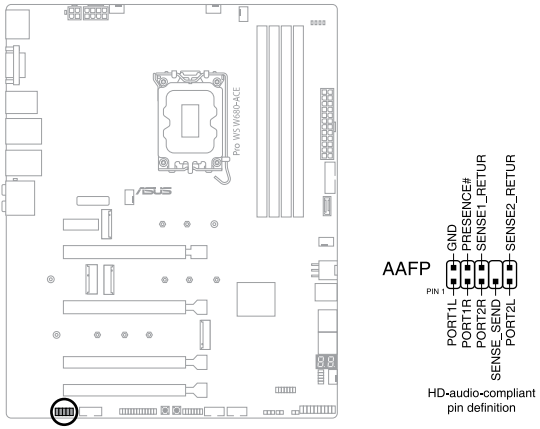

We recommend that you connect a high-definition front panel audio module to this connector to avail of the motherboard's high-definition audio capability.

### 17. LPT header

The LPT (Line Printing Terminal) connector supports devices such as a printer. LPT standardizes as IEEE 1284, which is the parallel port interface on IBM PC-compatible computers.

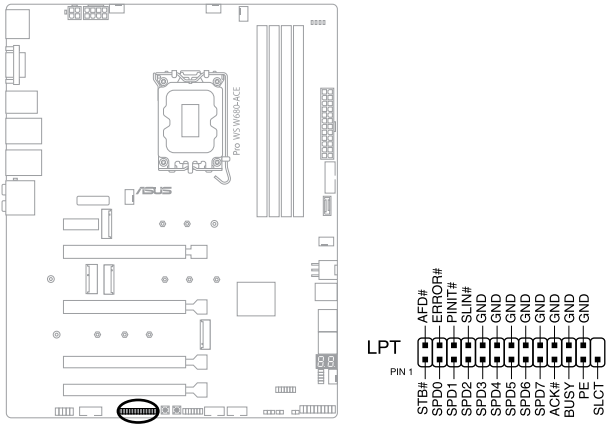

**18. LPT and Q-Code Switch header**

The LPT and Q-Code Switch header allows you to enable either LPT (Line Printing Thermal) connector or Q-Code.

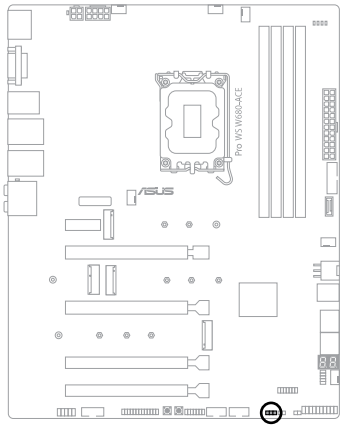


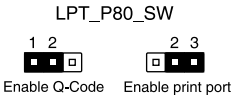


**19. M.2 slot (Key E)**

The M.2 Wi-Fi slot allows you to install an M.2 Wi-Fi module (E-key, type 2230; PCIe interface).

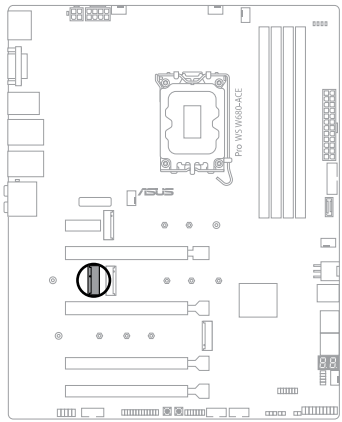


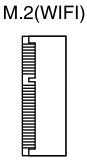


The M.2 Wi-Fi module is purchased separately.

**20. Start button**

Press the Power button to power up the system, or put the system into sleep or soft-off mode (depending on the operating system settings).

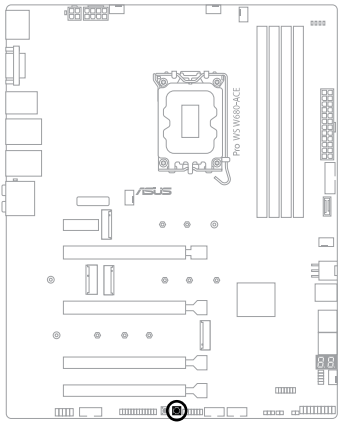


START

**21. System Panel header**

The System Panel header supports several chassis-mounted functions.

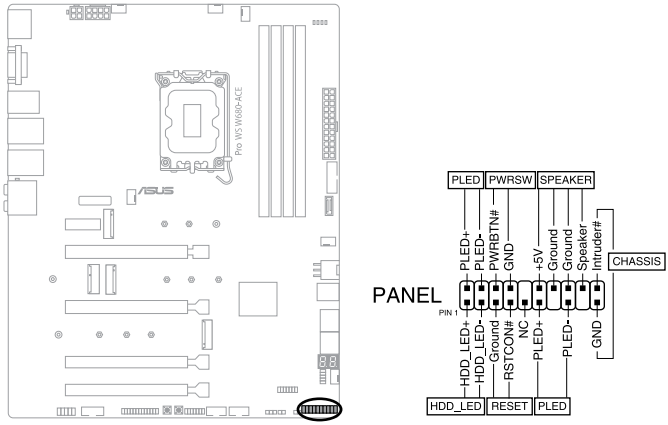


- **System Power LED header (PLED)**

  The 2-pin header allows you to connect the System Power LED. The System Power LED lights up when the system is connected to a power source, or when you turn on the system power, and blinks when the system is in sleep mode.

- **Storage Device Activity LED header (HDD_LED)**

  The 2-pin header allows you to connect the Storage Device Activity LED. The Storage Device Activity LED lights up or blinks when data is read from or written to the storage device or storage device add-on card.

- **System Warning Speaker header (SPEAKER)**

  The 4-pin header allows you to connect the chassis-mounted system warning speaker. The speaker allows you to hear system beeps and warnings.

- **Power Button/Soft-off Button header (PWRSW)**

  The 3-1 pin header allows you to connect the system power button. Press the power button to power up the system, or put the system into sleep or soft-off mode (depending on the operating system settings).

- **Reset button header (RESET)**

  The 2-pin header allows you to connect the chassis-mounted reset button. Press the reset button to reboot the system. You may also set this header to other functions.

This header is set to **[Reset]** by default. You can assign a different function to this header in the BIOS settings.

- **Chassis intrusion connector (CHASSIS)**

  The 2-pin connector allows you to connect the chassis-mounted intrusion detection sensor or switch. The chassis intrusion sensor or switch sends a high-level signal to the connector when a chassis component is removed or replaced, the signal is then generated as a chassis intrusion event.

**22. Thermal Sensor header**

The Thermal Sensor header allows you to connect a sensor to monitor the temperature of the devices and the critical components inside the motherboard. Connect the thermal sensor and place it on the device or the motherboard's component to detect its temperature.

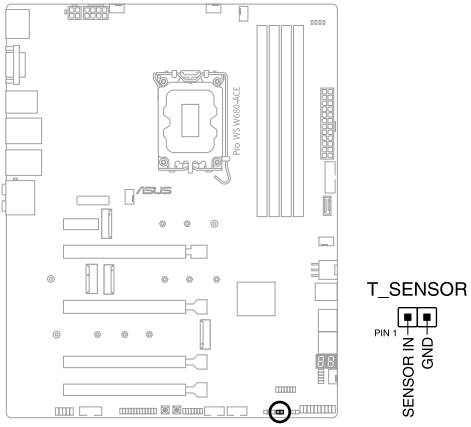


The thermal sensor is purchased separately.

**23. Thunderbolt™ header**

The Thunderbolt™ header allows you to connect an add-on Thunderbolt™ I/O card that supports Intel®'s Thunderbolt™ Technology, allowing you to connect Thunderbolt™-enabled devices to form a daisy-chain configuration.

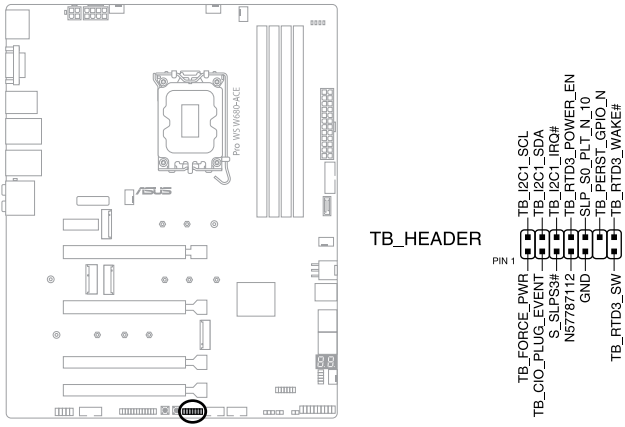


- The add-on Thunderbolt™ I/O card and Thunderbolt™ cables are purchased separately.
- Please visit the official website of your purchased Thunderbolt™ card for more details on compatibility.

The Thunderbolt™ card can only be used when installed to the PCIEX16(G3)_2 slot. Ensure to install your Thunderbolt™ card to the PCIEX16(G3)_2 slot.

## 24. TPM header

The TPM header allows you to connect a TPM module, which securely stores keys, digital certificates, passwords, and data. A TPM system also helps enhance network security, protect digital identities, and ensures platform integrity.

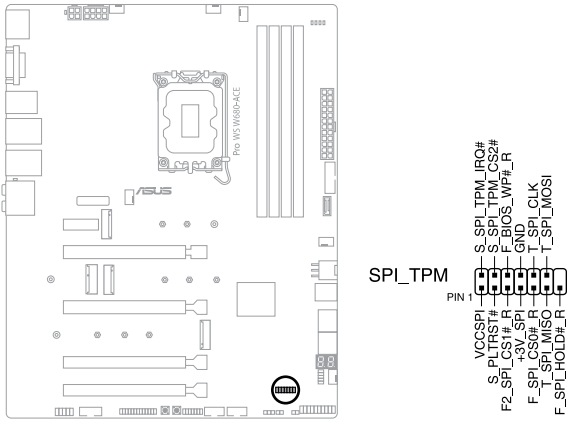

The TPM module is purchased separately.

## 25. Q-Code LED

The Q-Code LED design provides you with a 2-digit error code that displays the system status.

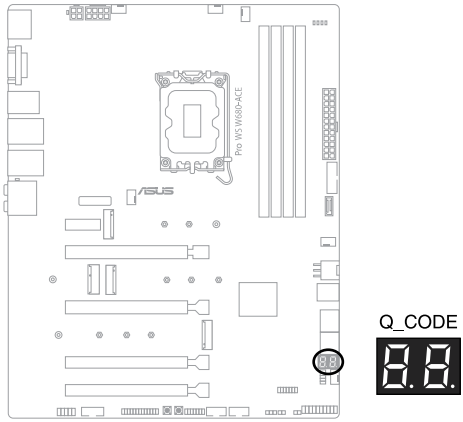

- The Q-Code LEDs provide the most probable cause of an error code as a starting point for troubleshooting. The actual cause may vary from case to case.
- Please refer to the Q-Code table in the **Appendix** section for more details.

**26. Q-LEDs**

The Q-LEDs check key components (CPU, DRAM, VGA, and booting devices) during the motherboard booting process. If an error is found, the critical component's LED stays lit up until the problem is solved.

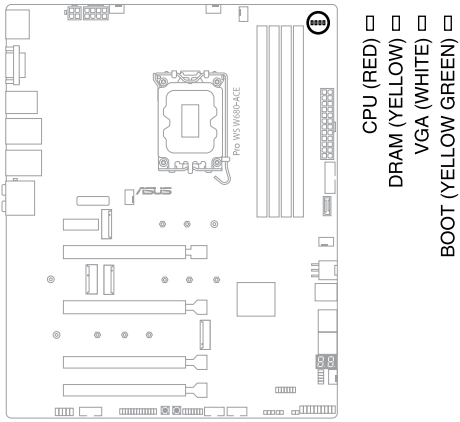


The Q-LEDs provide the most probable cause of an error code as a starting point for troubleshooting. The actual cause may vary from case to case.

**27. BIOS FlashBack™ LED**

The BIOS FlashBack™ LED lights up or blinks to indicate the status of the BIOS FlashBack™.

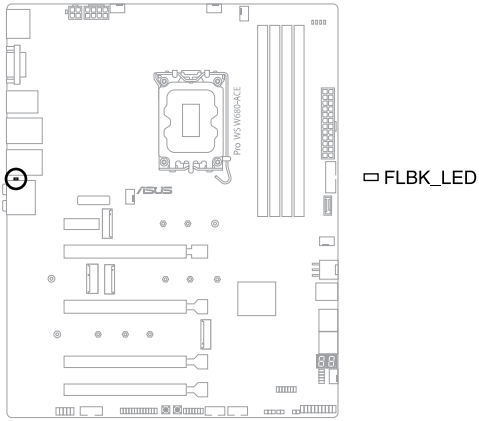


Refer to the **BIOS update utility** section for more information on using the BIOS FlashBack™ feature.

**28. 8-pin Power Plug LED**

The 8-pin Power Plug LED lights up to indicate that the 8-pin power plug is not connected.

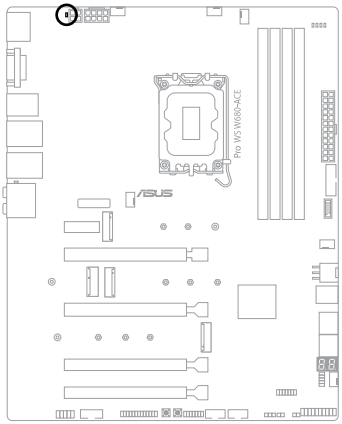


 PLUG_8PIN_PWR

# Basic Installation

2

## 2.1 Building your PC system

The diagrams in this section are for reference only. The motherboard layout may vary with models, but the installation steps are the same for all models.

### 2.1.1 CPU installation

- Ensure that you install the correct CPU designed for LGA1700 socket only. DO NOT install a CPU designed for LGA1155, LGA1156, LGA1151, and LGA1200 sockets on the LGA1700 socket.
- ASUS will not cover damages resulting from incorrect CPU installation/removal, incorrect CPU orientation/placement, or other damages resulting from negligence by the user.

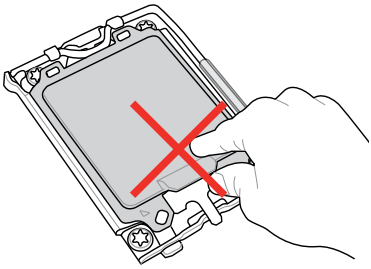

1

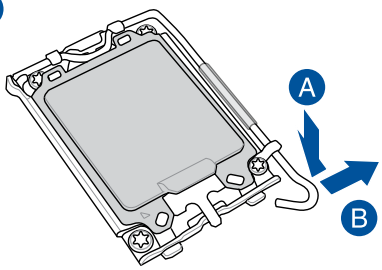


Take caution when lifting the load lever, ensure to hold onto the load lever when releasing the load lever. Letting go of the load lever immediately after releasing it may cause the load lever to spring back and cause damage to your motherboard.

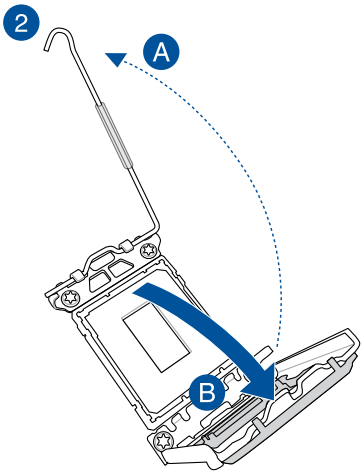


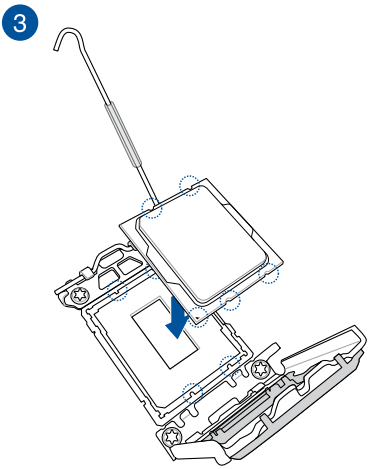


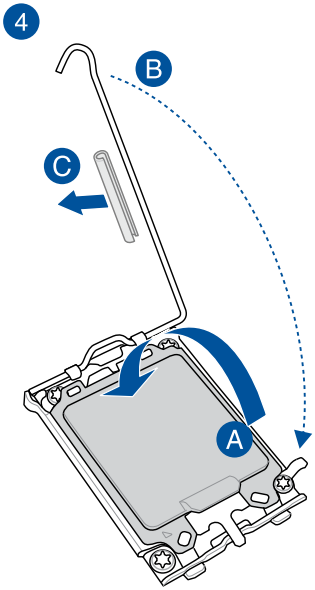


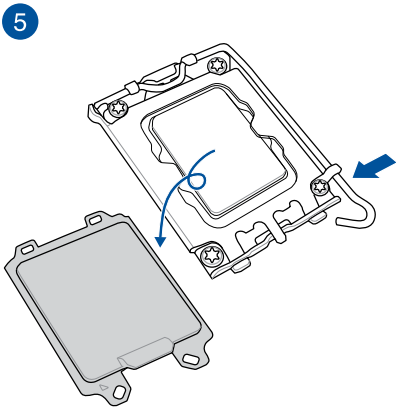


Ensure to remove the CPU Socket lever protector on the lever latch before locking the lever latch under the retention tab. Failure to do so may cause damages to your system when installing the cooling system.

## 2.1.2 Cooling system installation

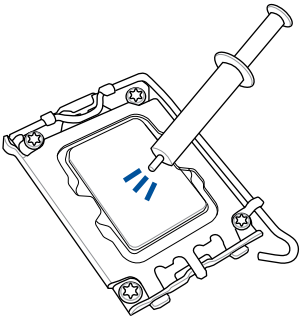

- Apply Thermal Interface Material to the CPU cooling system and CPU before you install the cooling system, if necessary.
- Ensure to remove the CPU Socket lever protector on the lever latch before installing the cooling system, failure to do so may cause damages to your system.

### To install a CPU heatsink and fan assembly

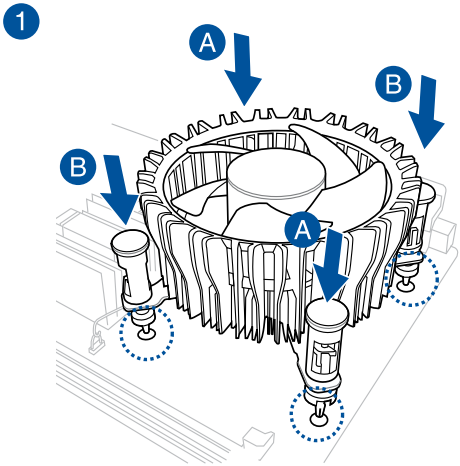


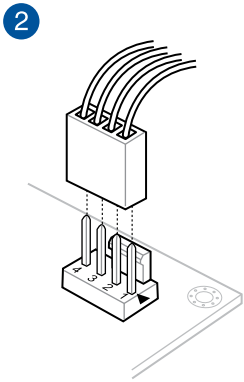

3

**Bottom side of motherboard**

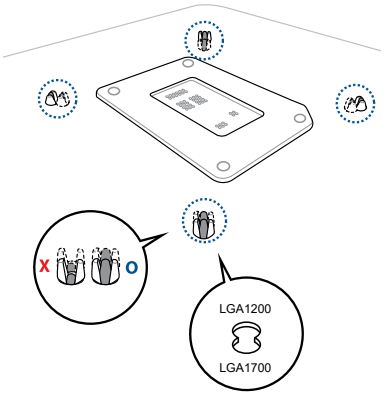


- We recommend using a LGA1700 compatible cooling system on an Intel® 600 series motherboard.
- Additional holes for LGA1200 compatible cooling systems are also available on ASUS' Intel® 600 series motherboards, however, we still strongly advise consulting with your cooling system vendor or manufacturer on the compatibility and functionality of the cooling system.
- Push-pin type LGA1200 compatible cooling systems cannot be installed to this motherboard.

Make sure a click is heard when pushing the push-pins.

## To install an AIO cooler

- We recommend using a LGA1700 compatible cooling system on an Intel® 600 series motherboard.
- Additional holes for LGA1200 compatible cooling systems are also available on ASUS' Intel® 600 series motherboards, however, we still strongly advise consulting with your cooling system vendor or manufacturer on the compatibility and functionality of the cooling system.
- If you wish to install an AIO cooler, we recommend installing the AIO cooler after installing the motherboard into the chassis.

1

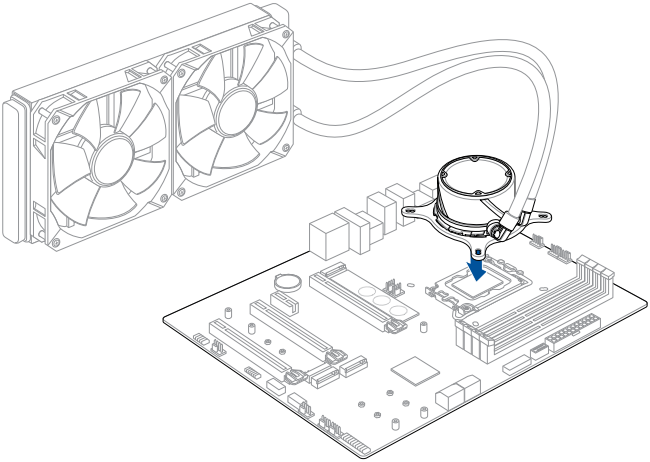

2

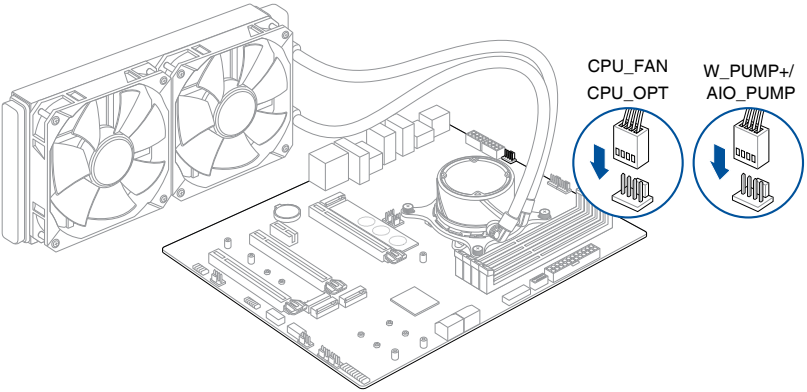

## 2.1.3 DIMM installation

1

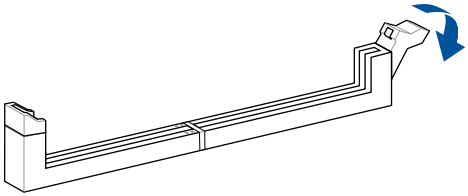

2

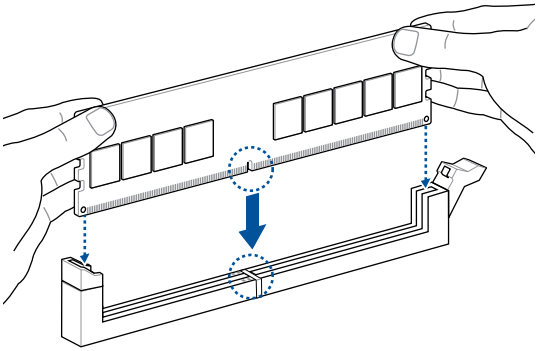

3

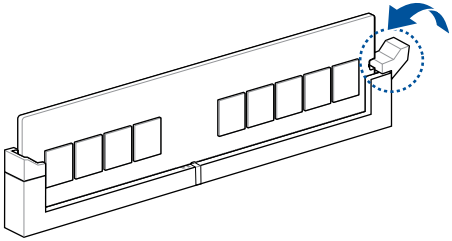

**To remove a DIMM**

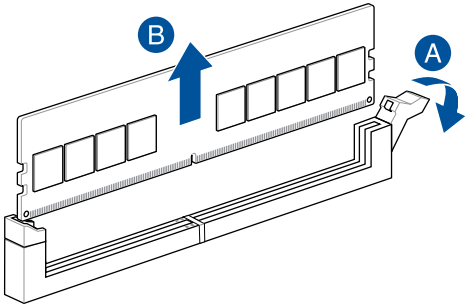

## 2.1.4 M.2 installation

Supported M.2 type varies per motherboard.

If the thermal pad on the M.2 heatsink becomes damaged, we recommend replacing it with a thermal pad with a thickness of 1.25mm.

- The illustrations only show the installation steps for a single M.2 slot, the steps are the same for the other M.2 slots if you wish to install an M.2 to another M.2 slot.
- Use a Phillips screwdriver when removing or installing the screws or screw stands mentioned in this section.
- The M.2 is purchased separately.

1. Completely loosen the screws on the heatsinks.
2. Lift and remove the heatsinks.

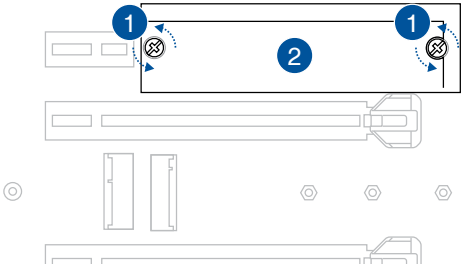

3. Install your M.2 to your M.2 slot. The steps may differ between installing M.2 of different lengths, please refer to the different types and their installation steps below:

- **To install an M.2 to M.2_1 slot**

  For 2280 length

  A. (optional) Install the bundled rubber for M.2 if you are installing a single sided M.2 storage device. DO NOT install the bundled rubber for M.2 when installing a double-sided M.2 storage device. The rubber installed by default is compatible with double sided M.2 storage devices.

  B. Rotate and adjust the M.2 Q-latch so that the handle points away from the M.2 slot.

  C. Install your M.2 to the M.2 slot.

  D. Rotate the M.2 Q-Latch clockwise to secure the M.2 in place.

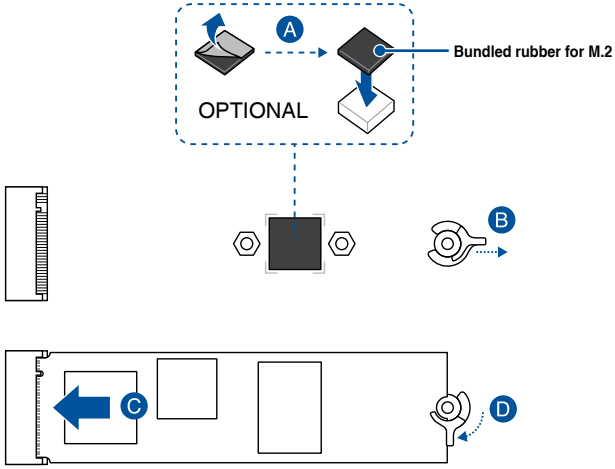

For 2242, 2260 length

A. (optional) Remove the M.2 rubber.

Follow this step only if you wish to install an M.2 to type 2242.

B. Install the bundled screw stand to the M.2 length screw hole you wish to install your M.2 to.

C. Install your M.2 to the M.2 slot.

D. Secure your M.2 using the bundled screw stand's screw.

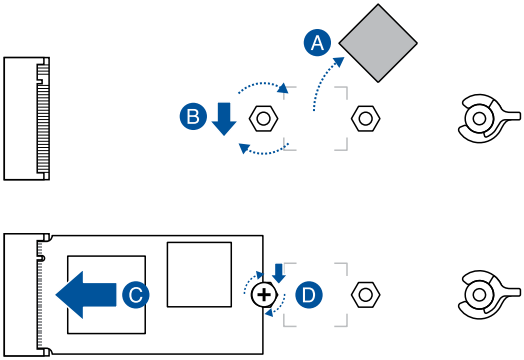

- **To install an M.2 to M.2_2 slot**

  For 2242, 2260, 2280 length

  A. Install the bundled screw stand to the M.2 length screw hole you wish to install your M.2 to.

  B. Install your M.2 to the M.2 slot.

  C. Secure your M.2 using the bundled screw stand's screw.

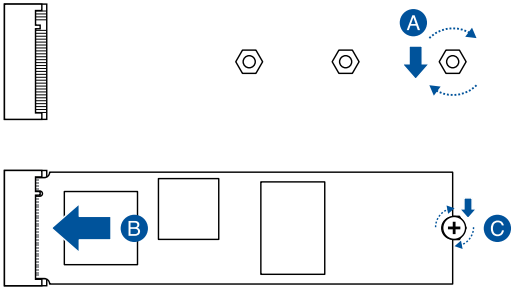

For 2242, 2260, 2280, 22110 length

A. (optional) Remove the pre-installed removable M.2 Q-Latch screw at the 2280 length screw hole.

B. (optional) Install the M.2 Q-Latch to the M.2 length screw hole you wish to install your M.2 to.

Follow step A and B only when you wish to install an 2242, 2260, or 22110 length M.2.

C. Rotate and adjust the M.2 Q-latch so that the handle points away from the M.2 slot.

D. Install your M.2 to the M.2 slot.

E. Rotate the M.2 Q-Latch clockwise to secure the M.2 in place.

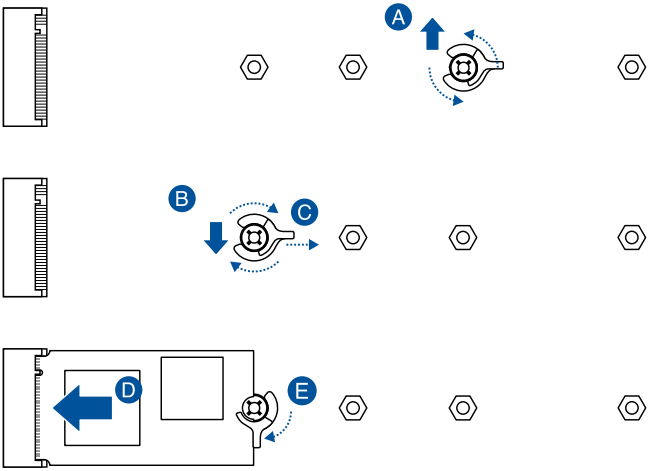

4. Remove the plastic film from the thermal pads on the bottom of the heatsinks.

If the thermal pad on the M.2 heatsink becomes damaged, we recommend replacing it with a thermal pad with a thickness of 1.25mm.

5. Replace the heatsinks.

6. Secure the heatsinks using the screws on the heatsink.

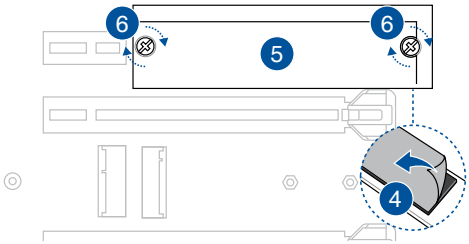

## 2.1.5 Motherboard installation

1. Place the motherboard into the chassis, ensuring that its rear I/O ports are aligned to the chassis' rear I/O panel.

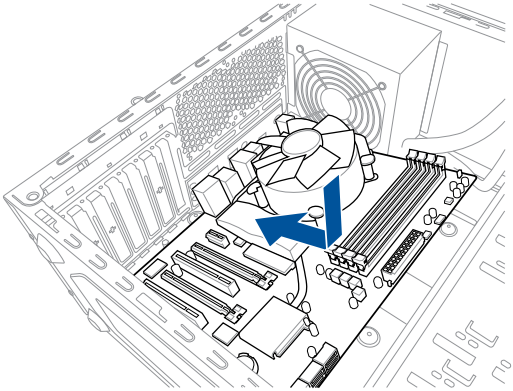

2. Place nine (9) screws into the holes indicated by circles to secure the motherboard to the chassis.

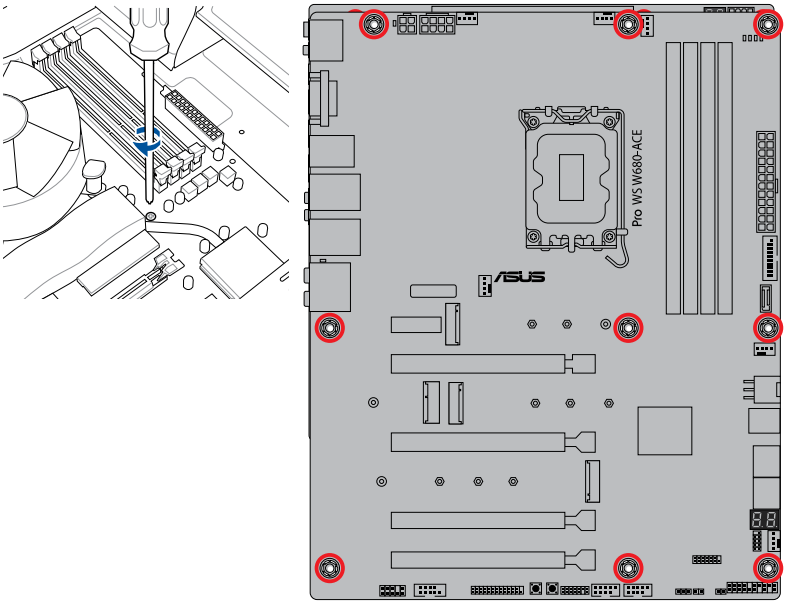


DO NOT over tighten the screws! Doing so can damage the motherboard.

## 2.1.6 ATX power connection

1

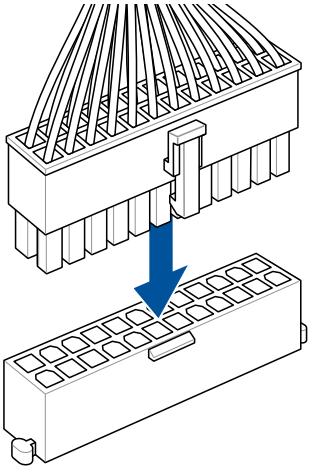

2

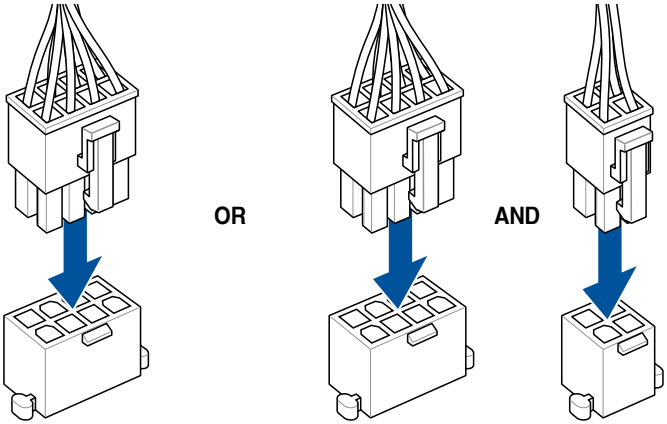


Ensure to connect the 8-pin power plug, or both the 8-pin and 4-pin power plugs.

3

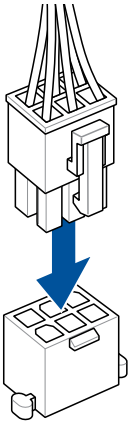

The **PCIE_6P_PWR** connector provides additional power for your PCIe X16 slots.

## 2.1.7 SATA device connection

1

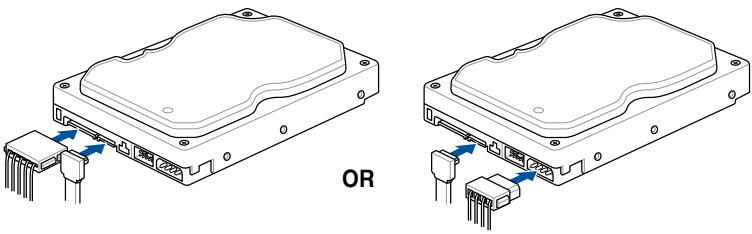


2

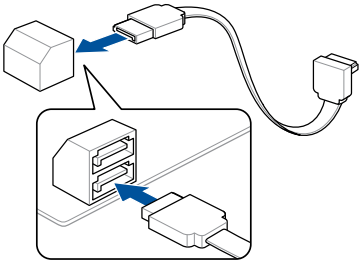

## 2.1.8 SlimSAS connection

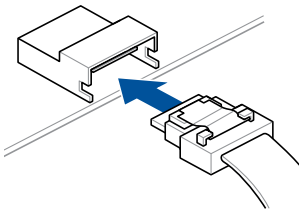

## 2.1.9 Front I/O connector

### To install front panel connector

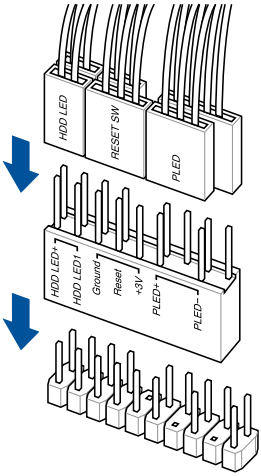


### To install USB 3.2 Gen 2x2 Type-C® connector

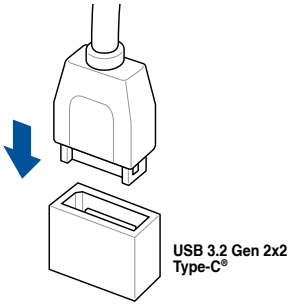


This connector will only fit in one orientation. Push the connector until it clicks into place.

### To install USB 3.2 Gen 1 connector

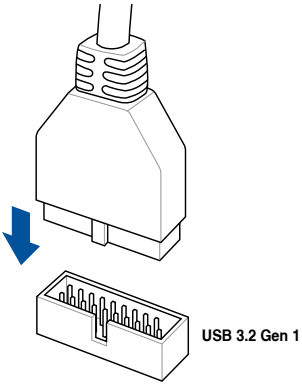


### To install USB 2.0 connector

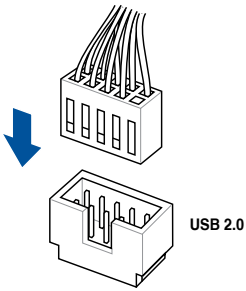


### To install front panel audio connector

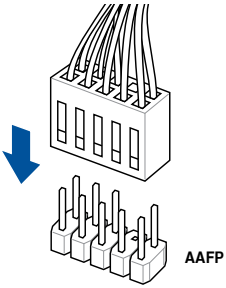


Chapter 2

## 2.1.10 Expansion card installation

### To install PCIe x16 cards

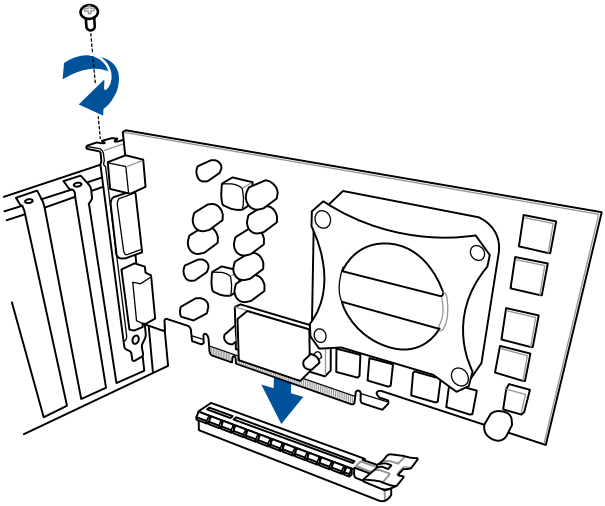

### To install PCIe x1 cards

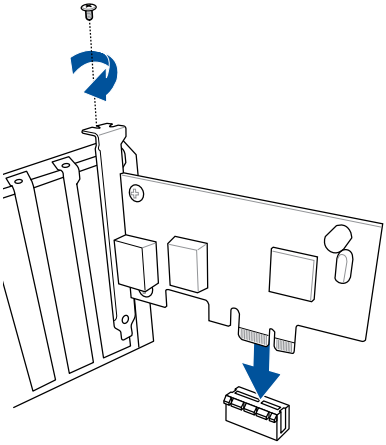

## To install Thunderbolt™ series card

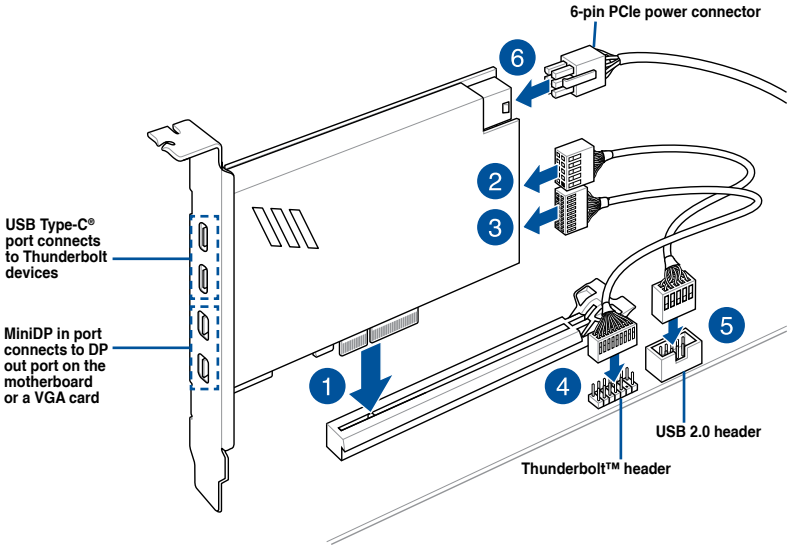


The Thunderbolt™ card can only be used when installed to the PCIEX16(G3)_2 slot. Ensure to install your Thunderbolt™ card to the PCIEX16(G3)_2 slot.

- Step 6 is optional, please connect a 6-pin PCIe power connector when you wish to use the USB Type-C® port Thunderbolt™ quick charge feature to charge a 5V or more device.
- The TypeC_1 port can support up to 20V devices, and the TypeC_2 port can support up to 9V devices when the 6-pin PCIe power connector is connected.
- Please visit the official website of your purchased Thunderbolt™ card for more details on compatibility.

## 2.1.11 M.2 Wi-Fi module and antenna installation

### Installing the M.2 W-Fi Module

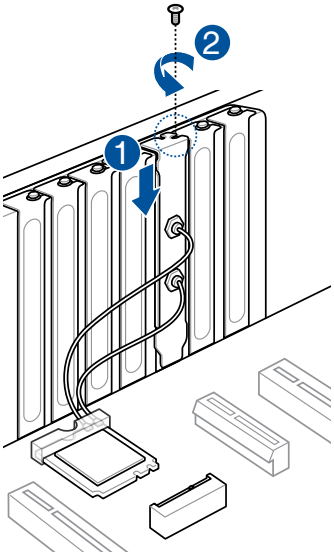


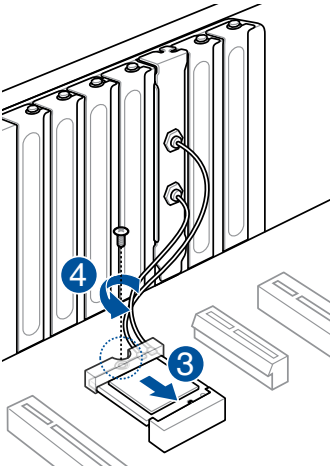


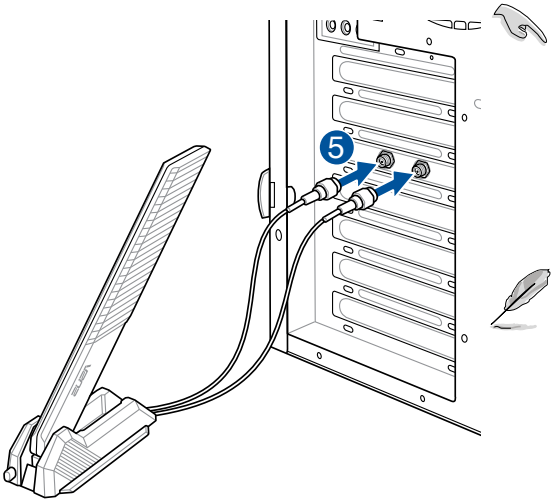


- Ensure that the ASUS Wi-Fi moving antenna is securely installed to the Wi-Fi ports.
- Ensure that the antenna is at least 20 cm away from all persons.

- The illustration to the left is for reference only. The I/O port layout may vary with models, but the Wi-Fi antenna installation procedure is the same for all models.
- The M.2 Wi-Fi module and antenna are purchased separately.

## 2.2 BIOS update utility

### BIOS FlashBack™

BIOS FlashBack™ allows you to easily update the BIOS without entering the existing BIOS or operating system.

**To use BIOS FlashBack™:**

1. Visit https://www.asus.com/support/ and download the latest BIOS version for this motherboard.

2. Manually rename the file as follows depending on your motherboard model:

| | |
|---|---|
| **Pro WS W680-ACE IPMI:** | PWW680AI.CAP |
| **Pro WS W680-ACE:** | PWW680A.CAP |

or launch the **BIOSRenamer.exe** application to automatically rename the file, then copy it to your USB storage device.

The **BIOSRenamer.exe** application is zipped together with your BIOS file when you download a BIOS file for a BIOS FlashBack™ compatible motherboard.

3. Plug the 24-pin power connector to the motherboard and turn on the power supply (no need to power on the system). Insert the USB storage device to the BIOS FlashBack™ port.

4. Press the BIOS FlashBack™ button for three (3) seconds until the BIOS FlashBack™ LED blinks three times, indicating that the BIOS FlashBack™ function is enabled.

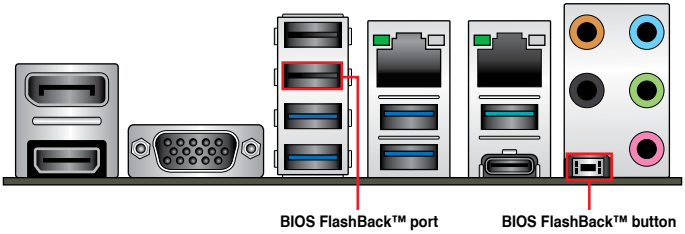


5. Wait until the light goes out, indicating that the BIOS updating process is completed.

For more BIOS update utilities in BIOS setup, refer to the section **Updating BIOS** in Chapter 3.

- Do not unplug portable disk, power system, or short the CLR_CMOS header while BIOS update is ongoing, otherwise update will be interrupted. In case of interruption, please follow the steps again.
- If the light flashes for five seconds and turns into a solid light, this means that the BIOS FlashBack™ is not operating properly. This may be caused by improper installation of the USB storage device and filename/file format error. If this scenario happens, please restart the system to turn off the light.
- Updating BIOS may have risks. If the BIOS program is damaged during the process and results to the system's failure to boot up, please contact your local ASUS Service Center.

For more information on using the BIOS FlashBack™ feature, please refer to https://www.asus.com/support/, or by scanning the QR code below.

## 2.3 Motherboard rear and audio connections

### 2.3.1 Rear I/O connection

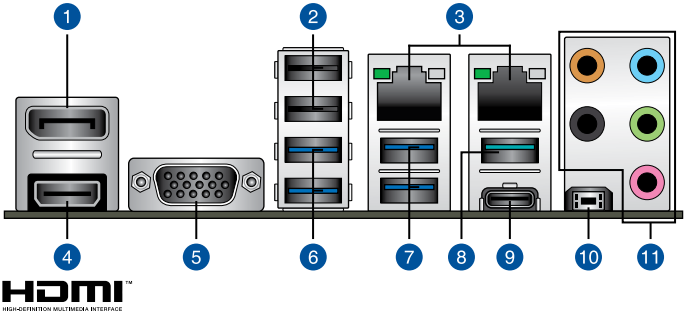


| Rear panel connectors | |
|---|---|
| 1. | DisplayPort |
| 2. | USB 2.0 ports 11 and 12 |
| 3. | Intel® 2.5Gb Ethernet ports* |
| 4. | HDMI® port |
| 5. | VGA port |
| 6. | USB 3.2 Gen 1 Type-A ports 5 and 6 |
| 7. | USB 3.2 Gen 1 Type-A ports 3 and 4 |
| 8. | USB 3.2 Gen 2 Type-A port 2 |
| 9. | USB 3.2 Gen 2 Type-C® port C1 |
| 10. | BIOS FlashBack™ button |
| 11. | Audio jacks** |

*** and ** : Refer to the tables on the next page for LAN port LEDs, and audio port definitions.**

We strongly recommend that you connect your devices to ports with matching data transfer rate. For example connecting your USB 3.2 Gen 1 devices to USB 3.2 Gen 1 ports for faster and better performance for your devices.

Chapter 2

### * Intel® 2.5Gb Ethernet port LED indications

| Activity Link LED | |
|---|---|
| **Status** | **Description** |
| OFF | No link |
| GREEN | Linked |
| BLINKING | Data activity |

| Speed LED | |
|---|---|
| **Status** | **Description** |
| OFF | No link |
| OFF | 100 Mbps / 10 Mbps connection |
| GREEN | 2.5 Gbps connection |
| ORANGE | 1 Gbps connection |

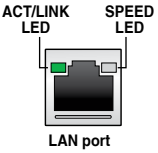


### ** Audio 2, 4, 5.1 or 7.1-channel configuration

| Port | 2-channel | 4-channel | 5.1-channel | 7.1-channel |
|---|---|---|---|---|
| Light Blue (Rear panel) | - | - | - | Side Speaker Out |
| Lime (Rear panel) | Front Speaker Out | Front Speaker Out | Front Speaker Out | Front Speaker Out |
| Pink (Rear panel) | - | - | - | - |
| Black (Rear panel) | - | Rear Speaker Out | Rear Speaker Out | Rear Speaker Out |
| Orange (Rear panel) | - | - | Center/ Subwoofer | Center/ Subwoofer |

## 2.3.2 Audio I/O connections

### Audio I/O ports

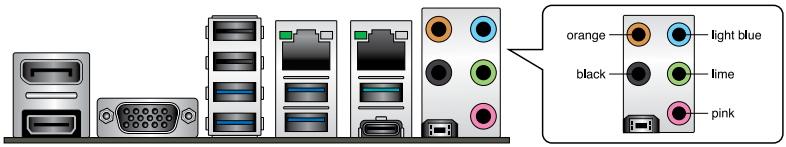


### Connect to Headphone and Mic

### Connect to 2-channel Speakers

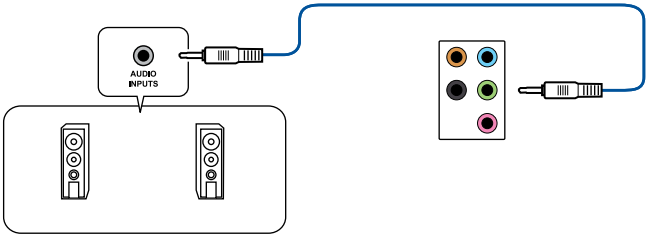


### Connect to 4-channel Speakers

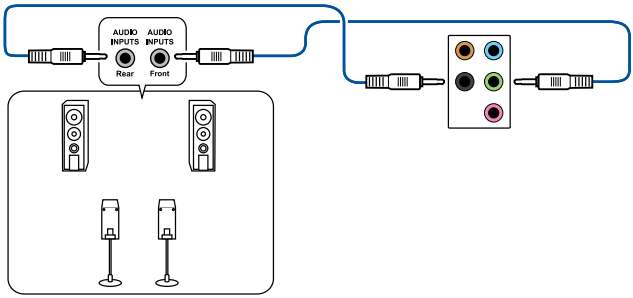


Chapter 2

## Connect to 5.1-channel Speakers

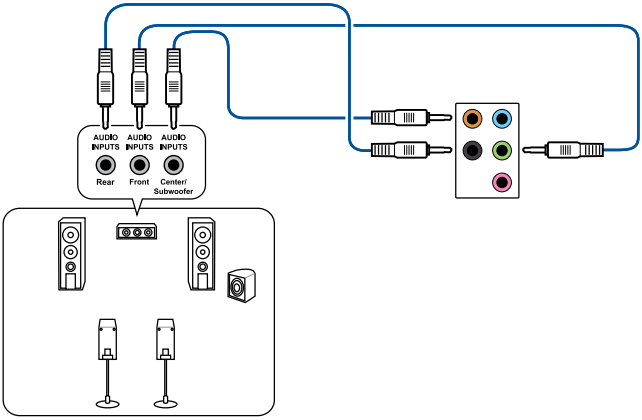


## Connect to 7.1-channel Speakers

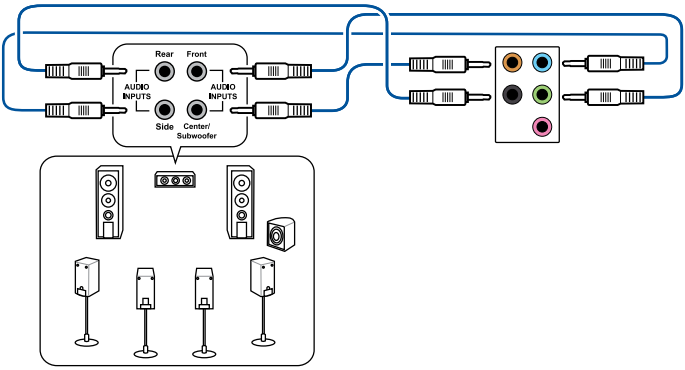


Chapter 2

## 2.4 Starting up for the first time

1. After making all the connections, replace the system case cover.
2. Ensure that all switches are off.
3. Connect the power cord to the power connector at the back of the system chassis.
4. Connect the power cord to a power outlet that is equipped with a surge protector.
5. Turn on the devices in the following order:
   a. Monitor
   b. External storage devices (starting with the last device on the chain)
   c. System power
6. After applying power, the system power LED on the system front panel case lights up. For systems with ATX power supplies, the system LED lights up when you press the ATX power button. If your monitor complies with the “green” standards or if it has a “power standby” feature, the monitor LED may light up or change from orange to green after the system LED turns on.

   The system then runs the power-on self tests (POST). While the tests are running, the BIOS beeps (refer to the BIOS beep codes table) or additional messages appear on the screen. If you do not see anything within 30 seconds from the time you turned on the power, the system may have failed a power-on test. Check the jumper settings and connections or call your retailer for assistance.

| BIOS Beep | Description |
|---|---|
| One short beep | VGA detected<br>Quick boot set to disabled<br>No keyboard detected |
| One continuous beep followed by two short beeps then a pause (repeated) | No memory detected |
| One continuous beep followed by three short beeps | No VGA detected |
| One continuous beep followed by four short beeps | Hardware component failure |

7. At power on, hold down the <Delete> key to enter the BIOS Setup. Follow the instructions in Chapter 3.

## 2.5 Turning off the computer

While the system is ON, press the power button for less than four seconds to put the system on sleep mode or soft-off mode, depending on the BIOS setting. Press the power button for more than four seconds to let the system enter the soft-off mode regardless of the BIOS setting.

# BIOS and RAID Support

3

## 3.1 Knowing BIOS

The new ASUS UEFI BIOS is a Unified Extensible Interface that complies with UEFI architecture, offering a user-friendly interface that goes beyond the traditional keyboard-only BIOS controls to enable a more flexible and convenient mouse input. You can easily navigate the new UEFI BIOS with the same smoothness as your operating system. The term “BIOS” in this user manual refers to “UEFI BIOS” unless otherwise specified.

BIOS (Basic Input and Output System) stores system hardware settings such as storage device configuration, overclocking settings, advanced power management, and boot device configuration that are needed for system startup in the motherboard CMOS. In normal circumstances, the default BIOS settings apply to most conditions to ensure optimal performance. **DO NOT change the default BIOS settings** except in the following circumstances:

- An error message appears on the screen during the system bootup and requests you to run the BIOS Setup.
- You have installed a new system component that requires further BIOS settings or update.

Inappropriate BIOS settings may result to instability or boot failure. **We strongly recommend that you change the BIOS settings only with the help of a trained service personnel**.

BIOS settings and options may vary due to different BIOS release versions. Please refer to the latest BIOS version for settings and options.

For more information on BIOS configurations, please refer to https://www.asus.com/support, or download the BIOS manual by scanning the QR code.

## 3.2 BIOS setup program

Use the BIOS Setup to update the BIOS or configure its parameters. The BIOS screen include navigation keys and brief onscreen help to guide you in using the BIOS Setup program.

### Entering BIOS at startup

To enter BIOS Setup at startup, press <Delete> or <F2> during the Power-On Self Test (POST). If you do not press <Delete> or <F2>, POST continues with its routines.

### Entering BIOS Setup after POST

To enter BIOS Setup after POST:

- Press <Ctrl>+<Alt>+<Delete> simultaneously.
- Press the reset button on the system chassis.
- Press the power button to turn the system off then back on. Do this option only if you failed to enter BIOS Setup using the first two options.

After doing either of the three options, press <Delete> key to enter BIOS.

- Ensure that a USB mouse is connected to your motherboard if you want to use the mouse to control the BIOS setup program.
- If the system becomes unstable after changing any BIOS setting, load the default settings to ensure system compatibility and stability. Select the **Load Optimized Defaults** item under the **Exit** menu or press hotkey **<F5>**.
- If the system fails to boot after changing any BIOS setting, try to clear the CMOS and reset the motherboard to the default value.
- The BIOS setup program does not support Bluetooth devices.

### BIOS menu screen

The BIOS Setup program can be used under two modes: **EZ Mode** and **Advanced Mode**. You can change modes from **Setup Mode** in **Boot menu** or by pressing the <F7> hotkey.

## 3.3 ASUS EZ Flash 3

The ASUS EZ Flash 3 feature allows you to update the BIOS without using an OS-based utility.

Ensure to load the BIOS default settings to ensure system compatibility and stability. Select the **Load Optimized Defaults** item under the **Exit** menu or press hotkey **<F5>**.

**To update the BIOS:**

- This function can support devices such as a USB flash disk with FAT 32/16 format and single partition only.
- DO NOT shut down or reset the system while updating the BIOS to prevent system boot failure!

1. Insert the USB flash disk that contains the latest BIOS file to the USB port.
2. Enter the Advanced Mode of the BIOS setup program. Go to the **Tool** menu to select **ASUS EZ Flash 3 Utility** and press <Enter>.
3. Press the Left arrow key to switch to the **Drive** field.
4. Press the Up/Down arrow keys to find the USB flash disk that contains the latest BIOS, and then press <Enter>.
5. Press the Right arrow key to switch to the **Folder** field.
6. Press the Up/Down arrow keys to find the BIOS file, and then press <Enter> to perform the BIOS update process. Reboot the system when the update process is done.

## 3.4 ASUS CrashFree BIOS 3

The ASUS CrashFree BIOS 3 utility is an auto recovery tool that allows you to restore the BIOS file when it fails or gets corrupted during the updating process. You can restore a corrupted BIOS file using a USB flash drive that contains the BIOS file.

### Recovering the BIOS

1. Download the latest BIOS version for this motherboard from https://www.asus.com/support/.
2. Rename the BIOS file as **asus.cap** or **PWW680AI.cap** and copy the renamed BIOS file to a USB flash drive.
3. Turn on the system.
4. Insert the USB flash drive containing the BIOS file to a USB port.
5. The utility automatically checks the devices for the BIOS file. When found, the utility reads the BIOS file and enters ASUS EZ Flash 3 automatically.
6. The system requires you to enter BIOS Setup to recover the BIOS setting. To ensure system compatibility and stability, we recommend that you press <F5> to load default BIOS values.

DO NOT shut down or reset the system while updating the BIOS! Doing so can cause system boot failure!

## 3.5 RAID configurations

The motherboard comes with the Intel® Rapid Storage Technology that supports PCIe RAID 0/1/5/10 and SATA RAID 0/1/5/10 configurations.

For more information on configuring your RAID sets, please refer to the **RAID Configuration Guide** which you can find at https://www.asus.com/support, or by scanning the QR code.

### RAID definitions

**RAID 0 (Data striping)** optimizes two identical hard disk drives to read and write data in parallel, interleaved stacks. Two hard disks perform the same work as a single drive but at a sustained data transfer rate, double that of a single disk alone, thus improving data access and storage. Use of two new identical hard disk drives is required for this setup.

**RAID 1 (Data mirroring)** copies and maintains an identical image of data from one drive to a second drive. If one drive fails, the disk array management software directs all applications to the surviving drive as it contains a complete copy of the data in the other drive. This RAID configuration provides data protection and increases fault tolerance to the entire system. Use two new drives or use an existing drive and a new drive for this setup. The new drive must be of the same size or larger than the existing drive.

**RAID 5** stripes both data and parity information across three or more hard disk drives. Among the advantages of RAID 5 configuration include better HDD performance, fault tolerance, and higher storage capacity. The RAID 5 configuration is best suited for transaction processing, relational database applications, enterprise resource planning, and other business systems. Use a minimum of three identical hard disk drives for this setup.

**RAID 10** is data striping and data mirroring combined without parity (redundancy data) having to be calculated and written. With the RAID 10 configuration you get all the benefits of both RAID 0 and RAID 1 configurations. Use four new hard disk drives or use an existing drive and three new drives for this setup.

# Appendix

## Q-Code table

| Code | Description |
|---|---|
| 00 | Not used |
| 01 | Power on. Reset type detection (soft/hard). |
| 02 | AP initialization before microcode loading |
| 03 | System Agent initialization before microcode loading |
| 04 | PCH initialization before microcode loading |
| 06 | Microcode loading |
| 07 | AP initialization after microcode loading |
| 08 | System Agent initialization after microcode loading |
| 09 | PCH initialization after microcode loading |
| 0B | Cache initialization |
| 0C – 0D | Reserved for future AMI SEC error codes |
| 0E | Microcode not found |
| 0F | Microcode not loaded |
| 10 | PEI Core is started |
| 11 – 14 | Pre-memory CPU initialization is started |
| 15 – 18 | Pre-memory System Agent initialization is started |
| 19 – 1C | Pre-memory PCH initialization is started |
| 2B – 2F | Memory initialization |
| 30 | Reserved for ASL (see ASL Status Codes section below) |
| 31 | Memory Installed |
| 32 – 36 | CPU post-memory initialization |
| 37 – 3A | Post-Memory System Agent initialization is started |
| 3B – 3E | Post-Memory PCH initialization is started |
| 4F | DXE IPL is started |
| 50 – 53 | Memory initialization error. Invalid memory type or incompatible memory speed |
| 54 | Unspecified memory initialization error |
| 55 | Memory not installed |
| 56 | Invalid CPU type or Speed |
| 57 | CPU mismatch |
| 58 | CPU self test failed or possible CPU cache error |
| 59 | CPU micro-code is not found or micro-code update is failed |
| 5A | Internal CPU error |
| 5B | Reset PPI is not available |
| 5C – 5F | Reserved for future AMI error codes |

*(continued on the next page)*

## Q-Code table

| Code | Description |
|---|---|
| E0 | S3 Resume is stared (S3 Resume PPI is called by the DXE IPL) |
| E1 | S3 Boot Script execution |
| E2 | Video repost |
| E3 | OS S3 wake vector call |
| E4 – E7 | Reserved for future AMI progress codes |
| E8 | S3 Resume Failed |
| E9 | S3 Resume PPI not Found |
| EA | S3 Resume Boot Script Error |
| EB | S3 OS Wake Error |
| EC – EF | Reserved for future AMI error codes |
| F0 | Recovery condition triggered by firmware (Auto recovery) |
| F1 | Recovery condition triggered by user (Forced recovery) |
| F2 | Recovery process started |
| F3 | Recovery firmware image is found |
| F4 | Recovery firmware image is loaded |
| F5 – F7 | Reserved for future AMI progress codes |
| F8 | Recovery PPI is not available |
| F9 | Recovery capsule is not found |
| FA | Invalid recovery capsule |
| FB – FF | Reserved for future AMI error codes |
| 60 | DXE Core is started |
| 61 | NVRAM initialization |
| 62 | Installation of the PCH Runtime Services |
| 63 – 67 | CPU DXE initialization is started |
| 68 | PCI host bridge initialization |
| 69 | System Agent DXE initialization is started |
| 6A | System Agent DXE SMM initialization is started |
| 6B – 6F | System Agent DXE initialization (System Agent module specific) |
| 70 | PCH DXE initialization is started |
| 71 | PCH DXE SMM initialization is started |
| 72 | PCH devices initialization |
| 73 – 77 | PCH DXE Initialization (PCH module specific) |
| 78 | ACPI module initialization |
| 79 | CSM initialization |
| 7A – 7F | Reserved for future AMI DXE codes |

*(continued on the next page)*

## Q-Code table

| Code | Description |
|---|---|
| 90 | Boot Device Selection (BDS) phase is started |
| 91 | Driver connecting is started |
| 92 | PCI Bus initialization is started |
| 93 | PCI Bus Hot Plug Controller Initialization |
| 94 | PCI Bus Enumeration |
| 95 | PCI Bus Request Resources |
| 96 | PCI Bus Assign Resources |
| 97 | Console Output devices connect |
| 98 | Console input devices connect |
| 99 | Super IO Initialization |
| 9A | USB initialization is started |
| 9B | USB Reset |
| 9C | USB Detect |
| 9D | USB Enable |
| 9E – 9F | Reserved for future AMI codes |
| A0 | IDE initialization is started |
| A1 | IDE Reset |
| A2 | IDE Detect |
| A3 | IDE Enable |
| A4 | SCSI initialization is started |
| A5 | SCSI Reset |
| A6 | SCSI Detect |
| A7 | SCSI Enable |
| A8 | Setup Verifying Password |
| A9 | Start of Setup |
| AA | Reserved for ASL (see ASL Status Codes section below) |
| AB | Setup Input Wait |
| AC | Reserved for ASL (see ASL Status Codes section below) |
| AD | Ready To Boot event |
| AE | Legacy Boot event |
| AF | Exit Boot Services event |
| B0 | Runtime Set Virtual Address MAP Begin |
| B1 | Runtime Set Virtual Address MAP End |
| B2 | Legacy Option ROM Initialization |
| B3 | System Reset |

*(continued on the next page)*

## Q-Code table

| Code | Description |
|---|---|
| B4 | USB hot plug |
| B5 | PCI bus hot plug |
| B6 | Clean-up of NVRAM |
| B7 | Configuration Reset (reset of NVRAM settings) |
| B8– BF | Reserved for future AMI codes |
| D0 | CPU initialization error |
| D1 | System Agent initialization error |
| D2 | PCH initialization error |
| D3 | Some of the Architectural Protocols are not available |
| D4 | PCI resource allocation error. Out of Resources |
| D5 | No Space for Legacy Option ROM |
| D6 | No Console Output Devices are found |
| D7 | No Console Input Devices are found |
| D8 | Invalid password |
| D9 | Error loading Boot Option (LoadImage returned error) |
| DA | Boot Option is failed (StartImage returned error) |
| DB | Flash update is failed |
| DC | Reset protocol is not available |

**ACPI/ASL Checkpoints (under OS)**

| Code | Description |
|---|---|
| 03 | System is entering S3 sleep state |
| 04 | System is entering S4 sleep state |
| 05 | System is entering S5 sleep state |
| 30 | System is waking up from the S3 sleep state |
| 40 | System is waking up from the S4 sleep state |
| AC | System has transitioned into ACPI mode. Interrupt controller is in PIC mode. |
| AA | System has transitioned into ACPI mode. Interrupt controller is in APIC mode. |

# Notices

## FCC Compliance Information

| | |
|---|---|
| Responsible Party: | Asus Computer International |
| Address: | 48720 Kato Rd., Fremont, CA 94538, USA |
| Phone / Fax No: | (510)739-3777 / (510)608-4555 |

This device complies with part 15 of the FCC Rules. Operation is subject to the following two conditions: (1) This device may not cause harmful interference, and (2) this device must accept any interference received, including interference that may cause undesired operation.

This equipment has been tested and found to comply with the limits for a Class B digital device, pursuant to part 15 of the FCC Rules. These limits are designed to provide reasonable protection against harmful interference in a residential installation. This equipment generates, uses and can radiate radio frequency energy and, if not installed and used in accordance with the instructions, may cause harmful interference to radio communications. However, there is no guarantee that interference will not occur in a particular installation. If this equipment does cause harmful interference to radio or television reception, which can be determined by turning the equipment off and on, the user is encouraged to try to correct the interference by one or more of the following measures:

- Reorient or relocate the receiving antenna.
- Increase the separation between the equipment and receiver.
- Connect the equipment into an outlet on a circuit different from that to which the receiver is connected.
- Consult the dealer or an experienced radio/TV technician for help.

## HDMI Compliance Statement

The terms HDMI, HDMI High-Definition Multimedia Interface, and the HDMI Logo are trademarks or registered trademarks of HDMI Licensing Administrator, Inc.

## Compliance Statement of Innovation, Science and Economic Development Canada (ISED)

This device complies with Innovation, Science and Economic Development Canada licence exempt RSS standard(s). Operation is subject to the following two conditions: (1) this device may not cause interference, and (2) this device must accept any interference, including interference that may cause undesired operation of the device.

CAN ICES-003(B)/NMB-003(B)

## Déclaration de conformité de Innovation, Sciences et Développement économique Canada (ISED)

Le présent appareil est conforme aux CNR d'Innovation, Sciences et Développement économique Canada applicables aux appareils radio exempts de licence. L'exploitation est autorisée aux deux conditions suivantes : (1) l'appareil ne doit pas produire de brouillage, et (2) l'utilisateur de l'appareil doit accepter tout brouillage radioélectrique subi, même si le brouillage est susceptible d'en compromettre le fonctionnement.

CAN ICES-003(B)/NMB-003(B)

## VCCI: Japan Compliance Statement

## Class B ITE

この装置は、クラスＢ情報技術装置です。この装置は、家庭環境で使用することを目的としていますが、この装置がラジオやテレビジョン受信機に近接して使用されると、受信障害を引き起こすことがあります。

取扱説明書に従って正しい取り扱いをして下さい。

ＶＣＣＩ－Ｂ

## Japan JATE

本製品は電気通信事業者（移動通信会社、固定通信会社、インターネットプロバイダ等）の通信回線（公衆無線LANを含む）に直接接続することができません。本製品をインターネットに接続する場合は、必ずルーター等を経由し接続してください。

## KC: Korea Warning Statement

B급 기기 (가정용 방송통신기자재)
이 기기는 가정용(B급) 전자파적합기기로서 주로 가정에서 사용하는 것을 목적으로 하며, 모든 지역에서 사용할 수 있습니다.

## Declaration of compliance for product environmental regulation

ASUS follows the green design concept to design and manufacture our products, and makes sure that each stage of the product life cycle of ASUS product is in line with global environmental regulations. In addition, ASUS disclose the relevant information based on regulation requirements.

Please refer to http://csr.asus.com/Compliance.htm for information disclosure based on regulation requirements ASUS is complied with:

### EU REACH and Article 33

Complying with the REACH (Registration, Evaluation, Authorisation, and Restriction of Chemicals) regulatory framework, we published the chemical substances in our products at ASUS REACH website at http://csr.asus.com/english/REACH.htm.

### EU RoHS

This product complies with the EU RoHS Directive. For more details, see http://csr.asus.com/english/article.aspx?id=35.

### India RoHS

This product complies with the "India E-Waste (Management) Rules, 2016" and prohibits use of lead, mercury, hexavalent chromium, polybrominated biphenyls (PBBs) and polybrominated diphenyl ethers (PBDEs) in concentrations exceeding 0.1% by weight in homogenous materials and 0.01% by weight in homogenous materials for cadmium, except for the exemptions listed in Schedule II of the Rule.

### Vietnam RoHS

ASUS products sold in Vietnam, on or after September 23, 2011,meet the requirements of the Vietnam Circular 30/2011/TT-BCT.

Các sản phẩm ASUS bán tại Việt Nam, vào ngày 23 tháng 9 năm2011 trở về sau, đều phải đáp ứng các yêu cầu của Thông tư 30/2011/TT-BCT của Việt Nam.

### Türkiye RoHS

AEEE Yönetmeliğine Uygundur

### ASUS Recycling/Takeback Services

ASUS recycling and takeback programs come from our commitment to the highest standards for protecting our environment. We believe in providing solutions for you to be able to responsibly recycle our products, batteries, other components as well as the packaging materials. Please go to http://csr.asus.com/english/Takeback.htm for detailed recycling information in different regions.

DO NOT throw the motherboard in municipal waste. This product has been designed to enable proper reuse of parts and recycling. This symbol of the crossed out wheeled bin indicates that the product (electrical and electronic equipment) should not be placed in municipal waste. Check local regulations for disposal of electronic products.

DO NOT throw the mercury-containing button cell battery in municipal waste. This symbol of the crossed out wheeled bin indicates that the battery should not be placed in municipal waste.

## France sorting and recycling information

## Safety Precautions

Accessories that came with this product have been designed and verified for the use in connection with this product. Never use accessories for other products to prevent the risk of electric shock or fire.

## 安全上のご注意

付属品は当該専用品です。他の機器には使用しないでください。機器の破損もしくは、火災や感電の原因となることがあります。

Appendix

## Simplified UKCA Declaration of Conformity

ASUSTeK Computer Inc. hereby declares that this device is in compliance with the essential requirements and other relevant provisions of related UKCA Directives. Full text of UKCA declaration of conformity is available at: www.asus.com/support.

## Simplified EU Declaration of Conformity

**English** ASUSTeK Computer Inc. hereby declares that this device is in compliance with the essential requirements and other relevant provisions of related Directives. Full text of EU declaration of conformity is available at: www.asus.com/support.

**Français** AsusTek Computer Inc. déclare par la présente que cet appareil est conforme aux critères essentiels et autres clauses pertinentes des directives concernées. La déclaration de conformité de l'UE peut être téléchargée à partir du site Internet suivant : www.asus.com/support.

**Deutsch** ASUSTeK Computer Inc. erklärt hiermit, dass dieses Gerät mit den wesentlichen Anforderungen und anderen relevanten Bestimmungen der zugehörigen Richtlinien übereinstimmt. Der gesamte Text der EU-Konformitätserklärung ist verfügbar unter: www.asus.com/support.

**Italiano** ASUSTeK Computer Inc. con la presente dichiara che questo dispositivo è conforme ai requisiti essenziali e alle altre disposizioni pertinenti con le direttive correlate. Il testo completo della dichiarazione di conformità UE è disponibile all'indirizzo: www.asus.com/support.

**Русский** Компания ASUS заявляет, что это устройство соответствует основным требованиям и другим соответствующим условиям соответствующих директив. Подробную информацию, пожалуйста, смотрите на www.asus.com/support.

**Български** С настоящото ASUSTeK Computer Inc. декларира, че това устройство е в съответствие със съществените изисквания и другите приложими постановления на свързаните директиви. Пълният текст на декларацията за съответствие на ЕС е достъпна на адрес: www.asus.com/support.

**Hrvatski** ASUSTeK Computer Inc. ovim izjavljuje da je ovaj uređaj sukladan s bitnim zahtjevima i ostalim odgovarajućim odredbama vezanih direktiva. Cijeli tekst EU izjave o sukladnosti dostupan je na: www.asus.com/support.

**Čeština** Společnost ASUSTeK Computer Inc. tímto prohlašuje, že toto zařízení splňuje základní požadavky a další příslušná ustanovení souvisejících směrnic. Plné znění prohlášení o shodě EU je k dispozici na adrese: www.asus.com/support.

**Dansk** ASUSTeK Computer Inc. erklærer hermed, at denne enhed er i overensstemmelse med hovedkravene og andre relevante bestemmelser i de relaterede direktiver. Hele EU-overensstemmelseserklæringen kan findes på: www.asus.com/support.

**Nederlands** ASUSTeK Computer Inc. verklaart hierbij dat dit apparaat voldoet aan de essentiële vereisten en andere relevante bepalingen van de verwante richtlijnen. De volledige tekst van de EU-verklaring van conformiteit is beschikbaar op: www.asus.com/support.

**Eesti** Käesolevaga kinnitab ASUSTeK Computer Inc, et see seade vastab asjakohaste direktiivide oluliste nõuetele ja teistele asjassepuutuvatele sätetele. EL vastavusdeklaratsiooni täielik tekst on saadaval järgmisel aadressil: www.asus.com/support.

**Suomi** ASUSTeK Computer Inc. ilmoittaa täten, että tämä laite on asiaankuuluvien direktiivien olennaisten vaatimusten ja muiden tätä koskevien säädösten mukainen. EU-yhdenmukaisuusilmoituksen koko teksti on luettavissa osoitteessa: www.asus.com/support.

**Ελληνικά** Με το παρόν, η AsusTek Computer Inc. δηλώνει ότι αυτή η συσκευή συμμορφώνεται με τις θεμελιώδεις απαιτήσεις και άλλες σχετικές διατάξεις των Οδηγιών της ΕΕ. Το πλήρες κείμενο της δήλωσης συμβατότητας είναι διαθέσιμο στη διεύθυνση: www.asus.com/support.

**Magyar** Az ASUSTeK Computer Inc. ezennel kijelenti, hogy ez az eszköz megfelel a kapcsolódó irányelvek lényeges követelményeinek és egyéb vonatkozó rendelkezéseinek. Az EU megfelelőségi nyilatkozat teljes szövege innen letölthető: www.asus.com/support.

**Latviski** ASUSTeK Computer Inc. ar šo paziņo, ka šī ierīce atbilst saistīto Direktīvu būtiskajām prasībām un citiem citiem saistošajiem nosacījumiem. Pilns ES atbilstības paziņojuma teksts pieejams šeit: www.asus.com/support.

**Lietuvių** „ASUSTeK Computer Inc." šiuo tvirtina, kad šis įrenginys atitinka pagrindinius reikalavimus ir kitas svarbias susijusių direktyvų nuostatas. Visą ES atitikties deklaracijos tekstą galima rasti: www.asus.com/support.

**Norsk** ASUSTeK Computer Inc. erklærer herved at denne enheten er i samsvar med hovedsaklige krav og andre relevante forskrifter i relaterte direktiver. Fullstendig tekst for EU-samsvarserklæringen finnes på: www.asus.com/support.

**Polski** Firma ASUSTeK Computer Inc. niniejszym oświadcza, że urządzenie to jest zgodne z zasadniczymi wymogami i innymi właściwymi postanowieniami powiązanych dyrektyw. Pełny tekst deklaracji zgodności UE jest dostępny pod adresem: www.asus.com/support.

**Português** A ASUSTeK Computer Inc. declara que este dispositivo está em conformidade com os requisitos essenciais e outras disposições relevantes das Diretivas relacionadas. Texto integral da declaração da UE disponível em: www.asus.com/support.

**Română** ASUSTeK Computer Inc. declară că acest dispozitiv se conformează cerințelor esențiale și altor prevederi relevante ale directivelor conexe. Textul complet al declarației de conformitate a Uniunii Europene se găsește la: www.asus.com/support.

**Srpski** ASUSTeK Computer Inc. ovim izjavljuje da je ovaj uređaj u saglasnosti sa osnovnim zahtevima i drugim relevantnim odredbama povezanih Direktiva. Pun tekst EU deklaracije o usaglašenosti je dostupan da adresi: www.asus.com/support.

**Slovensky** Spoločnosť ASUSTeK Computer Inc. týmto vyhlasuje, že toto zariadenie vyhovuje základným požiadavkám a ostatým príslušným ustanoveniam príslušných smerníc. Celý text vyhlásenia o zhode pre štáty EÚ je dostupný na adrese: www.asus.com/support.

**Slovenščina** ASUSTeK Computer Inc. izjavlja, da je ta naprava skladna z bistvenimi zahtevami in drugimi ustreznimi določbami povezanih direktiv. Celotno besedilo EU-izjave o skladnosti je na voljo na spletnem mestu: www.asus.com/support.

**Español** Por la presente, ASUSTeK Computer Inc. declara que este dispositivo cumple los requisitos básicos y otras disposiciones pertinentes de las directivas relacionadas. El texto completo de la declaración de la UE de conformidad está disponible en: www.asus.com/support.

**Svenska** ASUSTeK Computer Inc. förklarar härmed att denna enhet överensstämmer med de grundläggande kraven och andra relevanta föreskrifter i relaterade direktiv. Fulltext av EU-försäkran om överensstämmelse finns på: www.asus.com/support.

**Українська** ASUSTeK Computer Inc. заявляє, що цей пристрій відповідає основним вимогам та іншим відповідним положенням відповідних Директив. Повний текст декларації відповідності стандартам ЄС доступний на: www.asus.com/support.

**Türkçe** AsusTek Computer Inc., bu aygıtın temel gereksinimlerle ve ilişkili Yönergelerin diğer ilgili koşullarıyla uyumlu olduğunu beyan eder. AB uygunluk bildiriminin tam metni şu adreste bulunabilir: www.asus.com/support.

**Bosanski** ASUSTeK Computer Inc. ovim izjavljuje da je ovaj uređaj usklađen sa bitnim zahtjevima i ostalim odgovarajućim odredbama vezanih direktiva. Cijeli tekst EU izjave o usklađenosti dostupan je na: www.asus.com/support.

# Warranty

**EN: ASUS Guarantee Information**

- ASUS offers a voluntary manufacturer's Commercial Guarantee.
- ASUS reserves the right to interpret the provisions of the ASUS Commercial Guarantee.
- This ASUS Commercial Guarantee is provided independently and in addition to the statutory Legal Guarantee and in no way affects or limits the rights under the Legal Guarantee.

For all the guarantee information, please visit https://www.asus.com/support.

**F: Garantie ASUS**

- ASUS fournit une garantie commerciale en tant que garantie volontaire du fabricant.
- ASUS se réserve le droit d'interpréter et de clarifier les informations relatives à la garantie commerciale ASUS.
- Cette garantie commerciale ASUS est fournie indépendamment et parallèlement à la garantie légale, elle n'affecte ou ne limite d'aucune façon les droits acquis par la garantie légale.

Pour plus d'informations sur la garantie, consultez le site https://www.asus.com/fr/support/.

**G: ASUS Garantieinformationen**

- ASUS bietet eine freiwillige Warengarantie des Herstellers an.
- ASUS behält sich das Recht zur Auslegung der Bestimmungen in der ASUS Warengarantie vor.
- Diese ASUS Warengarantie wird unabhängig und zusätzlich zur rechtmäßigen gesetzlichen Garantie gewährt und beeinträchtigt oder beschränkt in keiner Weise die Rechte aus der gesetzlichen Garantie.

Die vollständigen Garantieinformationen finden Sie unter https://www.asus.com/de/support/.

**I: Informativa sulla Garanzia ASUS**

- ASUS offre una Garanzia Commerciale volontaria del produttore.
- ASUS si riserva il diritto di interpretare le disposizioni della Garanzia Commerciale ASUS.
- La presente Garanzia Commerciale ASUS viene fornita in modo indipendente e in aggiunta alla Garanzia Legale prevista per legge e non pregiudica o limita in alcun modo i diritti previsti dalla Garanzia Legale.

Per tutte le informazioni sulla garanzia, visitare https://www.asus.com/it/support.

**R: Информация о гарантии ASUS**

- ASUS предлагает добровольную гарантию от производителя.
- ASUS оставляет за собой право интерпретирование положений гарантии ASUS.
- Настоящая гарантия ASUS никоим образом не ограничивает Ваши права, предусмотренные локальным законодательством.

Для получения полной информации о гарантии посетите https://www.asus.com/ru/support/.

**DA: ASUS garantioplysninger**

- ASUS tilbyder en valgfri handelsmæssig garanti.
- ASUS forbeholder sig retten til at fortolke bestemmelserne i ASUS' handelsmæssige garanti.
- Denne handelsmæssige garanti fra ASUS tilbydes uafhængigt, som en tilføjelse til den lovbestemte juridiske garanti og den påvirker eller begrænser på ingen måde rettighederne i den juridiske garanti.

Alle garantioplysningerne kan findes på https://www.asus.com/dk/support/.

**BG: Информация за гаранцията от ASUS**

- ASUS предлага доброволна търговска гаранция от производителя.
- ASUS си запазва правото да тълкува условията на търговската гаранция на ASUS.
- Тази търговска гаранция на ASUS се предлага независимо от и в допълнение на законовата гаранция. Тя по никакъв начин не оказва влияние върху правата на потребителя в законовата гаранция и по никакъв начин не ги ограничава.

За цялостна информация относно гаранцията, моля, посетете https://www.asus.com/support.

**CZ: Informace o záruce společnosti ASUS**

- Společnost ASUS nabízí dobrovolnou komerční záruku výrobce.
- Společnost ASUS si vyhrazuje právo vykládat ustanovení komerční záruky společnosti ASUS.
- Tato komerční záruka společnosti ASUS je poskytována nezávisle a jako doplněk zákonné záruky a žádným způsobem neovlivňuje ani neomezuje práva vyplývající ze zákonné záruky.

Všechny informace o záruce najdete na adrese https://www.asus.com/cz/support/.

**CR: Informacije o ASUS jamstvu**

- ASUS dragovoljno nudi komercijalno proizvođačko jamstvo.
- ASUS zadržava prava na tumačenje odredbi ASUS komercijalnog jamstva.
- Ovo ASUS komercijalno jamstvo daje se neovisno i kao dodatak zakonskom jamstvu i ni na koji način ne ograničuje prava iz okvira zakonskog jamstva.

Sve informacije o jamstvu potražite na https://www.asus.com/support.

**DU: ASUS-garantie-informatie**

- SUS biedt een vrijwillige commerciële garantie van de fabrikant.
- ASUS behoudt zich het recht voor om de bepalingen van de commerciële garantie van ASUS uit te leggen.
- Deze commerciële garantie van ASUS wordt onafhankelijk en als aanvulling op de statutaire Wettelijke garantie geboden en beïnvloedt of beperkt in geen geval de rechten onder de wettelijke garantie.

Voor alle informatie over de garantie, gaat u naar https://www.asus.com/nl/support/.

**EE: Teave ASUS-e garantii kohta**

- ASUS pakub vabatahtlikku tasulist tootjagarantiid.
- ASUS jätab endale õiguse tõlgendada ASUS-e tasulise garantii tingimusi.
- See ASUS-e tasuline garantii on sõltumatu lisagarantii seadusega kehtestatud garantiile ega mõjuta mingil määral seadusega kehtestatud garantiid ning seadusega kehtestatud garantii piiranguid.

Vaadake garantiiga seotud teavet veebisaidilt https://www.asus.com/ee/.

**GK: Πληροφορίες εγγύησης ASUS**

- Η ASUS προσφέρει μια εθελοντική Εμπορική εγγύηση κατασκευαστή.
- Η ASUS διατηρεί το δικαίωμα ερμηνείας των διατάξεων της Εμπορικής εγγύησης ASUS.
- Αυτή η Εμπορική εγγύηση ASUS παρέχεται ανεξάρτητα και επιπροσθέτως της θεσμικής Νομικής εγγύησης και σε καμία περίπτωση δεν επηρεάζει ή περιορίζει τα δικαιώματα βάσει της Νομικής εγγύησης.

Για όλες τις πληροφορίες εγγύησης, επισκεφθείτε τη διεύθυνση https://www.asus.com/gr-el/.

**HUG: ASUS garanciális információk**

- Az ASUS önkéntes gyártói kereskedelmi garanciát kínál.
- Az ASUS fenntartja magának a jogot, hogy értelmezze az ASUS kereskedelmi garanciára vonatkozó rendelkezéseket.
- Ezt a kereskedelmi garanciát az ASUS függetlenül és a törvényes garancia mellett nyújtja és semmilyen módon nem befolyásolja, vagy korlátozza a jogi garancia nyújtotta jogokat.

A garanciára vonatkozó teljes körű információkért látogasson el a https://www.asus.com/hu/support/ oldalra.

**LV: ASUS garantijas informācija**

- ASUS piedāvā brīvprātīgu ražotāja komerciālo garantiju.
- ASUS patur tiesības interpretēt ASUS komerciālās garantijas noteikumus.
- Šī ASUS komerciālā garantija tiek piedāvāta neatkarīgi un papildus likumā noteiktajai juridiskajai garantijai, un tā nekādi neietekmē vai neierobežo juridiskajā garantijā noteiktās tiesības.

Lai iegūtu informāciju par garantiju, apmeklējiet vietni https://www.asus.com/lv/.

**LT: Informacija apie ASUS garantiją**

- ASUS siūlo savanorišką komercinę gamintojo garantiją.
- ASUS pasilieka teisę savo nuožiūra aiškinti šios komercinės ASUS garantijos nuostatas.
- Ši komercinė ASUS garantija suteikiama nepriklausoma, be įstatyminės teisinės garantijos, ir jokiu būdu nepaveikia ar neapriboja teisinės garantijos suteikiamų teisių.

Norėdami gauti visą informaciją apie garantiją, apsilankykite https://www.asus.com/lt/.

**PL: Informacje o gwarancji firmy ASUS**

- Firma ASUS oferuje dobrowolną gwarancję handlową producenta.
- Firma ASUS zastrzega sobie prawo do interpretacji warunków gwarancji handlowej firmy ASUS.
- Niniejsza gwarancja handlowa firmy ASUS jest udzielana niezależnie, jako dodatek do wymaganej ustawowo gwarancji prawnej i w żaden sposób nie wpływa na prawa przysługujące na mocy gwarancji prawnej ani ich nie ogranicza.

Wszelkie informacje na temat gwarancji można znaleźć na stronie https://www.asus.com/pl/support.

**PG: Informações de Garantia ASUS**

- A ASUS oferece uma Garantia Comercial voluntária do fabricante.
- A ASUS reserva o direito de interpretar as disposições da Garantia Comercial da ASUS.
- Esta Garantia Comercial da ASUS é fornecida de forma independente além da Garantia Legal estatutária e não afeta nem limita de qualquer forma os direitos estabelecidos na Garantia Legal.

Para consultar todas as informações sobre a garantia, visite https://www.asus.com/pt/support/.

**RO: Informații despre garanția ASUS**

- ASUS oferă o garanție comercială voluntară a producătorului.
- ASUS Își rezervă dreptul de a interpreta prevederile garanției comerciale ASUS.
- Această garanție comercială ASUS este oferită independent și în plus față de garanția obligatorie legal și nu afectează sau limitează în niciun fel drepturile acordate conform garanției legale.

Pentru toate informațiile legate de garanție, vizitați https://www.asus.com/ro/support.

**SL: Informacije o garanciji ASUS**

- ASUS ponuja prostovoljno tržno garancijo proizvajalca.
- ASUS si pridržuje pravico do razlage določb tržne garancije družbe ASUS.
- Ta tržna garancija družbe ASUS je na voljo neodvisno in kot dodatek zakonsko predpisani pravni garanciji ter na noben način ne vpliva na pravice, ki jih zagotavlja pravna garancija, oziroma jih omejuje.

Vse informacije o garanciji najdete na spletnem mestu https://www.asus.com/support.

**SK: Informácie o záruke ASUS**

- ASUS ponúka dobrovoľnú obchodnú záruku výrobcu.
- ASUS si vyhradzuje právo interpretovať ustanovenia obchodnej záruky ASUS.
- Táto obchodná záruka ASUS je poskytnutá nezávisle a navyše k zákonnej záruke a v žiadnom prípade neovplyvňuje ani neobmedzuje tieto práva podľa tejto zákonnej záruky.

Všetky ďalšie informácie o záruke nájdete na https://www.asus.com/sk/support.

**ES: Información de garantía de ASUS**

- ASUS ofrece una garantía comercial voluntaria del fabricante.
- ASUS se reserva el derecho de interpretar las disposiciones de esta garantía comercial de ASUS.
- Esta garantía comercial de ASUS se proporciona de forma independiente y adicional a la garantía estatutaria y de ninguna manera afecta a los derechos bajo la garantía legal ni los limita.

Para obtener toda la información sobre la garantía, visite https://www.asus.com/ES/support/.

**TR: ASUS Garanti Bilgileri**

- ASUS, gönüllü olarak üretici Ticari Garantisi sunar.
- ASUS, ASUS Ticari Garantisinin hükümlerini yorumlama hakkını saklı tutar.
- Bu ASUS Ticari Garantisi, bağımsız olarak ve hukuki Yasal Garanti'ye ek olarak sağlanır ve hiçbir şekilde Yasal Garanti kapsamındaki hakları etkilemez veya sınırlandırmaz.

Tüm garanti bilgileri için lütfen https://www.asus.com/tr/support adresini ziyaret edin.

**FI: ASUS-takuutiedot**

- ASUS tarjoaa vapaaehtoisen valmistajan kaupallisen takuun.
- ASUS pidättää oikeuden tulkita ASUS-kaupallisen takuun ehdot.
- Tämä ASUS-kaupallinen takuu tarjotaan itsenäisesti lakisääteisen oikeudellisen takuun lisäksi eikä se vaikuta millään tavoin laillisen takuun oikeuksiin tai rajoita niitä.

Saadaksesi kaikki takuutiedot, siirry osoitteeseen https://www.asus.com/fi/support.

**NW: Informasjon om ASUS-garanti**

- ASUS tilbyr som produsent en frivillig kommersiell garanti.
- ASUS forbeholder seg retten til å tolke bestemmelsene i ASUS sin kommersielle garanti.
- ASUS sin kommersielle garanti gis uavhengig og i tillegg til den lovbestemte juridiske garantien, og verken påvirker eller begrenser rettighetene under den juridiske garantien på noen måte.

Du finner fullstendig informasjon om garanti på https://www.asus.com/no/support/.

**SB: Informacije o ASUS garanciji**

- ASUS nudi dobrovoljnu proizvođačku komercijalnu garanciju.
- ASUS zadržava pravo da tumači odredbe svoje ASUS komercijalne garancije.
- Ova ASUS komercijalna garancija daje se nezavisno, kao dodatak zakonskoj pravnoj garanciji, i ni ka koji način ne utiče na i ne ograničava prava data pravnom garancijom.

Za sve informacije o garanciji, posetite https://www.asus.com/support/.

**SW: ASUS garantiinformation**

- ASUS erbjuder en frivillig kommersiell tillverkningsgaranti.
- ASUS förbehåller sig rätten att tolka bestämmelserna i ASUS kommersiella garanti.
- Denna kommersiella garanti från ASUS tillhandahålles separat och som tillägg till den lagstadgade garantin, och påverkar eller begränsar på intet sätts rättigheterna under den lagstadgade garantin.

För all garantiinformation, besök https://www.asus.com/se/support/.

**UA: Інформація про Гарантію ASUS**

- ASUS пропонує добровільну Комерційну Гарантію виробника.
- ASUS застерігає за собою право тлумачити положення Комерційної Гарантії ASUS
- Цю Комерційну Гарантію надано незалежно і на додаток до обов'язкової Законної Гарантії; вона жодним чином не впливає на права за Законною Гарантією і не обмежує їх.

Всю інформацію про гарантію подано тут: https://www.asus.com/ua/support.

**MX: Garantía y Soporte**

Esta Garantía aplica en el país de compra. Usted acepta que en esta garantía:

- Los procedimientos de servicio pueden variar en función del país.
- Algunos servicios y/o piezas de reemplazo pudieran no estar disponibles en todos los países.
- Algunos países pueden tener tarifas y restricciones que se apliquen en el momento de realizar el servicio, visite el sitio de soporte de ASUS en https://www.asus.com/mx/support/ para ver más detalles.
- Si tiene alguna queja o necesidad de un centro de reparación local o el periodo de garantía del producto ASUS, por favor visite el sitio de Soporte de ASUS en https://www.asus.com/mx/support/ para mayores detalles.

**Información de contacto ASUS**
Esta garantía está respaldada por:
ASUSTeK Computer Inc.
Centro de Atención ASUS +52 (55) 1946-3663

**BP: Informações de garantia ASUS**

Esta garantia aplica-se ao período definido pela garantia legal (90 dias) mais o período de garantia comercial oferecido pela ASUS. Por exemplo: 12M significa 12 meses de garantia no total (3 meses de garantia legal mais 9 meses de garantia contratual), 24 meses significa 24 meses de garantia no total (3 meses de garantia legal mais 21 meses de garantia contratual) e 36 meses significa 36 meses de garantia no total (3 meses de garantia legal e 33 de garantia contratual) a contar da data da garantia declarada (Data de Início da Garantia).

Para todas as informações de garantia, visite https://www.asus.com/br/support/.

**ID: Informasi Garansi ASUS**

Garansi ini berlaku di negara tempat pembelian.

Periode Garansi tertera pada kemasan/kotak dari Produk dan Masa Garansi dimulai sejak tanggal pembelian Produk ASUS dengan kondisi baru.

Silahkan pindai Kode QR di bagian bawah halaman terakhir untuk Kartu Garansi versi Web dalam format PDF untuk lebih informasi jelas mengenai jaminan garansi Produk ASUS.

- Informasi Dukungan ASUS, silakan kunjungi https://www.asus.com/id/support.
- Informasi Lokasi Layanan, silakan kunjungi https://www.asus.com/id/support/Service-Center/Indonesia.
- Layanan Call Center: 1500128

**VI: Thông tin đảm bảo của ASUS**

- ASUS cung cấp Bảo hành thương mại tự nguyện của nhà sản xuất.
- ASUS bảo lưu quyền giải thích các điều khoản của Bảo hành thương mại của ASUS.
- Bảo hành thương mại này của ASUS được cung cấp độc lập và ngoài Bảo đảm pháp lý theo luật định và không có cách nào ảnh hưởng đến hoặc giới hạn các quyền theo Bảo lãnh pháp lý. Để biết tất cả các thông tin bảo hành, vui lòng truy cập

https://www.asus.com/vn/support

Appendix

# ASUS contact information

## ASUSTeK COMPUTER INC.
Address: 1F., No. 15, Lide Rd., Beitou Dist., Taipei City 112

## ASUS COMPUTER INTERNATIONAL (America)
Address: 48720 Kato Rd., Fremont, CA 94538, USA

## ASUS COMPUTER GmbH (Germany and Austria)
Address: Harkortstrasse 21-23, 40880 Ratingen, Germany

## ASUSTeK (UK) LIMITED
Address: 1st Floor, Sackville House, 143-149 Fenchurch Street, London, EC3M 6BL, England, United Kingdom

# Service and Support
Visit our multi-language website at https://www.asus.com/support.