MEG Z790 ACE

Motherboard

User Guide

Benutzerhandbuch

Manuel d'utilisation

Руководство пользователя

取扱説明書

사용 명서

使用手冊

使用手册

English

Contents

Quick Start 3

Specifications 15

Special Features 21

Package Contents 22

Back Panel Connectors 23

- LAN Port LED Status Table 24
- Audio Jacks Connection 25
- Installing Antennas 27
- Connecting Thunderbolt Devices via Daisy-chain 28

Overview of Components 29

- CPU Socket 30
- DIMM Slots 31
- PCI_E1~3: PCIe Expansion Slots 32
- M2_1~5: M.2 Slots (Key M) 33
- SATA_5~8 & SATA_A1~A2: SATA 6Gb/s Connectors 42
- JAUD1: Front Audio Connector 42
- JFP1, JFP2: Front Panel Connectors 43
- JDASH1: Tuning Controller Connector 44
- W_FLOW1: Water Flow Meter Connector 44
- JCI1: Chassis Intrusion Connector 45
- POWER1, RESET1: Power Button, Reset Button 45
- CPU_PWR1~2, ATX_PWR1, PD_PWR1: Power Connectors 46
- JUSB5~6: USB 3.2 Gen 2x2 Type-C Front Panel Connectors 47
- JUSB3~4: USB 3.2 Gen 1 Connectors 47
- JUSB1~2: USB 2.0 Connectors 48
- JTPM1: TPM Module Connector 48
- T_SEN1~2: Thermal Sensor Connector 49
- BIOS_SW1: Multi-BIOS Switch 49
- JOC_FS1: Safe Boot Jumper 50
- JOC_RT1: OC Retry Button Connector 50
- JSLOW1: Slow Mode Booting Jumper 51
- JLN1~2: Low Temperature Booting Jumpers 51
- CPU_FAN1, PUMP_FAN1~2, SYS_FAN1~5: Fan Connectors 52

JBAT1: Clear CMOS (Reset BIOS) Jumper 53
BAT1: CMOS Battery 54
V-Check Points Lite 54
JRGB1: RGB LED Connector 55
JARGB_V2_1~3: A-RAINBOW V2 (ARGB Gen2) LED Connectors 56

Onboard LEDs 58
EZ Debug LED 58
LED_SW1: EZ LED Control 58
Debug Code LED 59
Boot Phases 59
Debug Code LED Table 59

Installing OS, Drivers & MSI Center 66
MSI Center 69

UEFI BIOS 70
BIOS Setup 71
Resetting BIOS 72
Updating BIOS 72

Block Diagram i

Regulatory Notices ii

Quick Start

Thank you for purchasing a new motherboard from MSI®. This Quick Start section provides demonstration diagrams about how to install your computer. Some of the installations also provide video demonstrations. Please link to the URL to watch it with the web browser on your phone or tablet. You may have even link to the URL by scanning the QR code.

Preparing Tools and Components

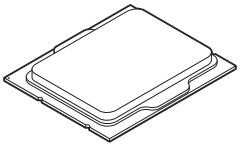

Intel® LGA1700 CPU

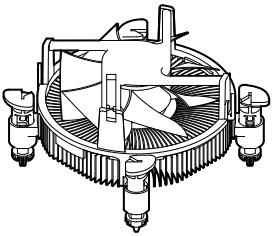

LGA1700 CPU Fan

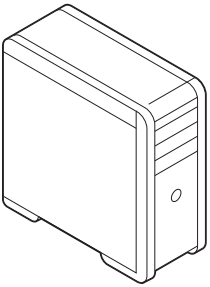

Chassis

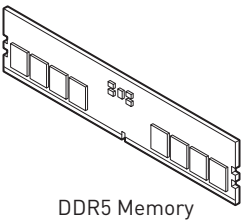

DDR5 Memory

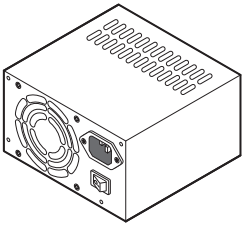

Power Supply Unit

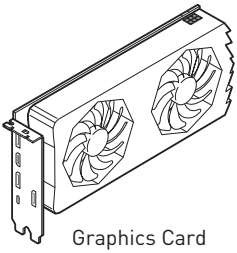

Graphics Card

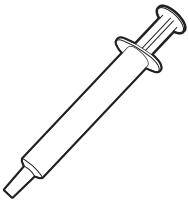

Thermal Paste

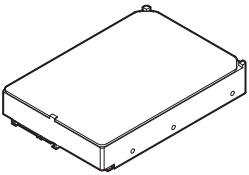

SATA Hard Disk Drive

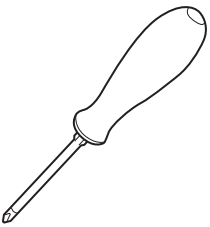

Phillips Screwdriver

A Package of Screws

Safety Information

- The components included in this package are prone to damage from electrostatic discharge (ESD). Please adhere to the following instructions to ensure successful computer assembly.
- Ensure that all components are securely connected. Loose connections may cause the computer to not recognize a component or fail to start.
- Hold the motherboard by the edges to avoid touching sensitive components.
- It is recommended to wear an electrostatic discharge (ESD) wrist strap when handling the motherboard to prevent electrostatic damage. If an ESD wrist strap is not available, discharge yourself of static electricity by touching another metal object before handling the motherboard.
- Store the motherboard in an electrostatic shielding container or on an anti-static pad whenever the motherboard is not installed.
- Before turning on the computer, ensure that there are no loose screws or metal components on the motherboard or anywhere within the computer case.
- Do not boot the computer before installation is completed. This could cause permanent damage to the components as well as injury to the user.
- If you need help during any installation step, please consult a certified computer technician.
- Always turn off the power supply and unplug the power cord from the power outlet before installing or removing any computer component.
- Keep this user guide for future reference.
- Keep this motherboard away from humidity.
- Make sure that your electrical outlet provides the same voltage as is indicated on the PSU, before connecting the PSU to the electrical outlet.
- Place the power cord such a way that people can not step on it. Do not place anything over the power cord.
- All cautions and warnings on the motherboard should be noted.
- If any of the following situations arises, get the motherboard checked by service personnel:
  - Liquid has penetrated into the computer.
  - The motherboard has been exposed to moisture.
  - The motherboard does not work well or you can not get it work according to user guide.
  - The motherboard has been dropped and damaged.
  - The motherboard has obvious sign of breakage.
- Do not leave this motherboard in an environment above 60°C (140°F), it may damage the motherboard.

Case stand-off notification

To prevent damage to the motherboard, any unnecessary mounting stand-off between the motherboard circuits and the computer case is prohibited. The Case standoff keep out zone signs will be marked on the backside of motherboard (as shown below) to serve as a warning to user.

Avoid collision notification

Protective paint is printed around each screw hole to prevent parts from being scratched.

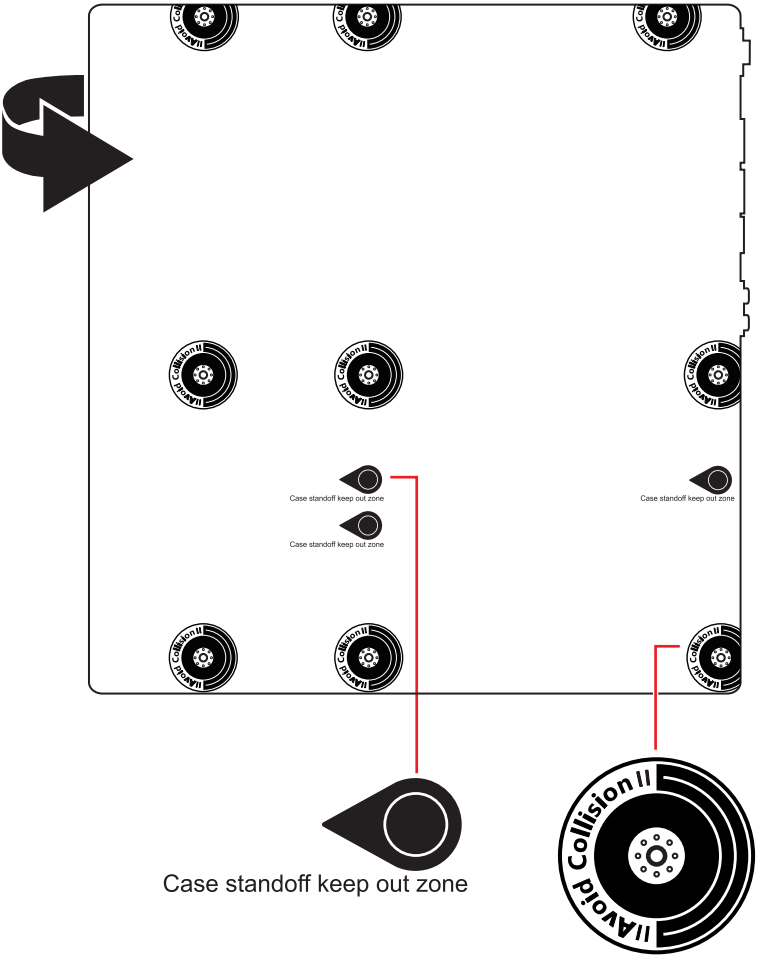

Installing a Processor

- https://youtu.be/KMf9oIDsGes

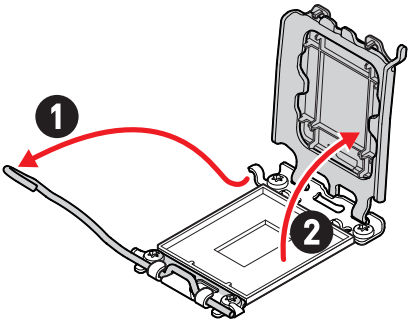

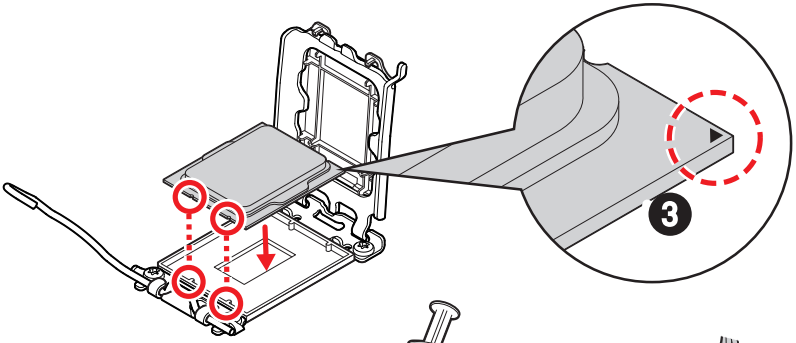

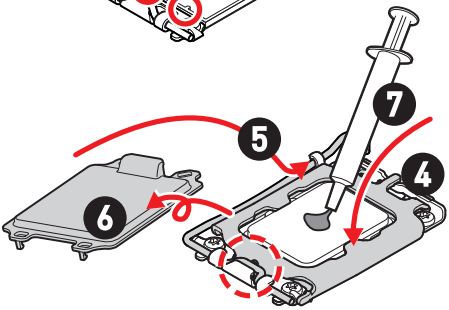

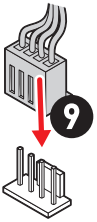

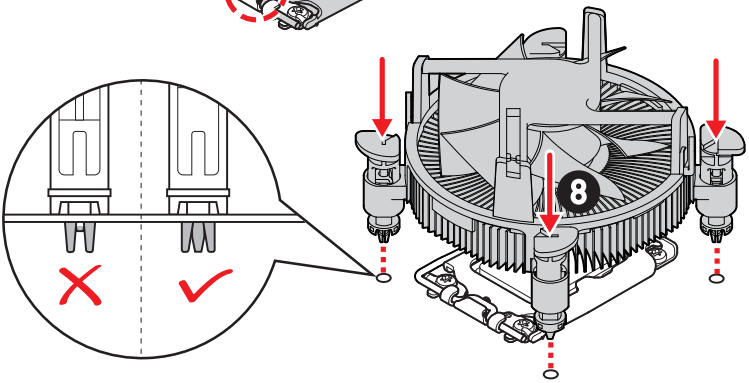

Installing DDR5 memory

- https://youtu.be/XiNmkDNZcZk

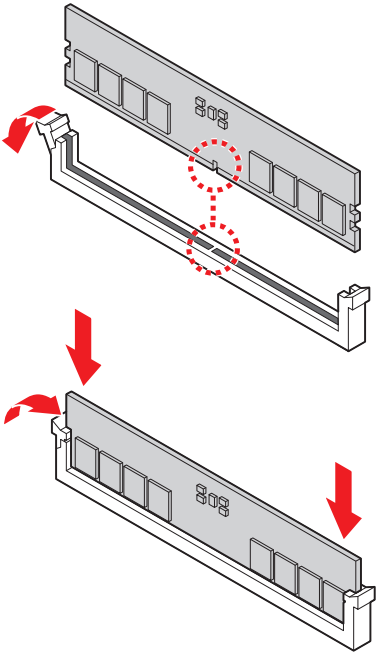

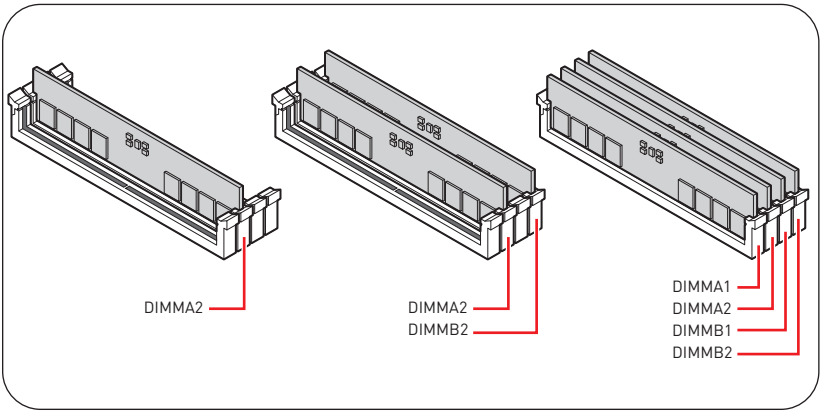

Connecting the Front Panel Header

- http://youtu.be/DPELIdVNZUI

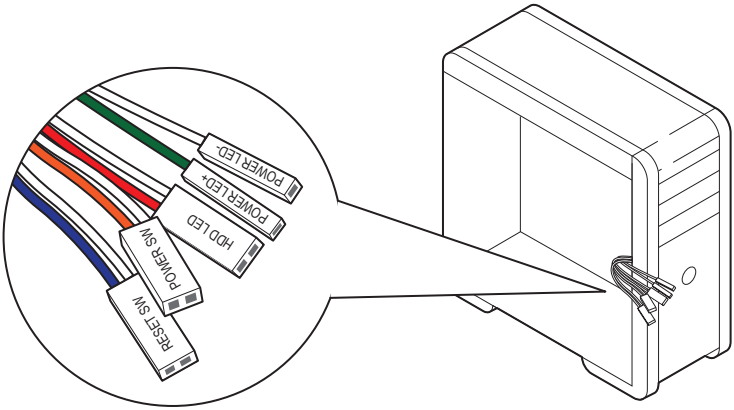

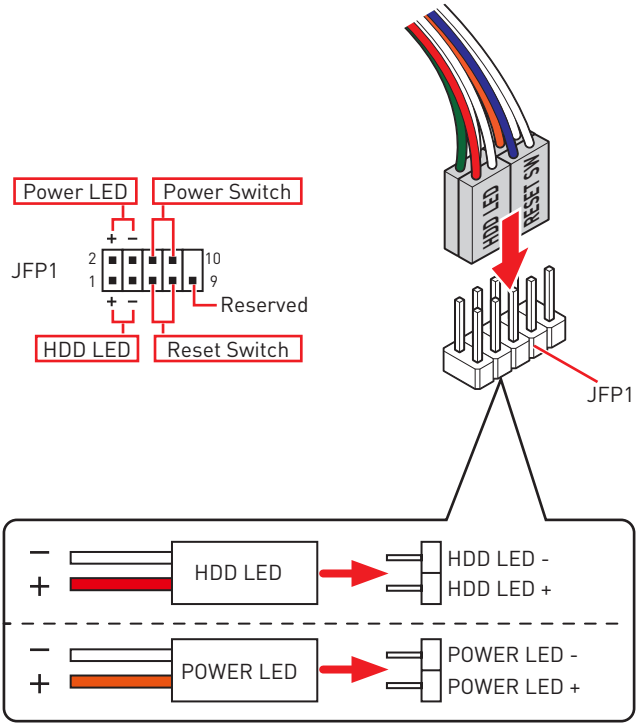

Installing the Motherboard

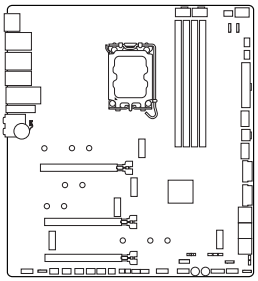

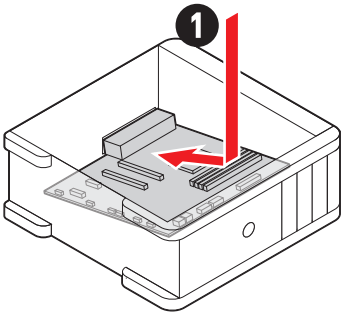

- https://youtu.be/wWI6Qt51Wnc

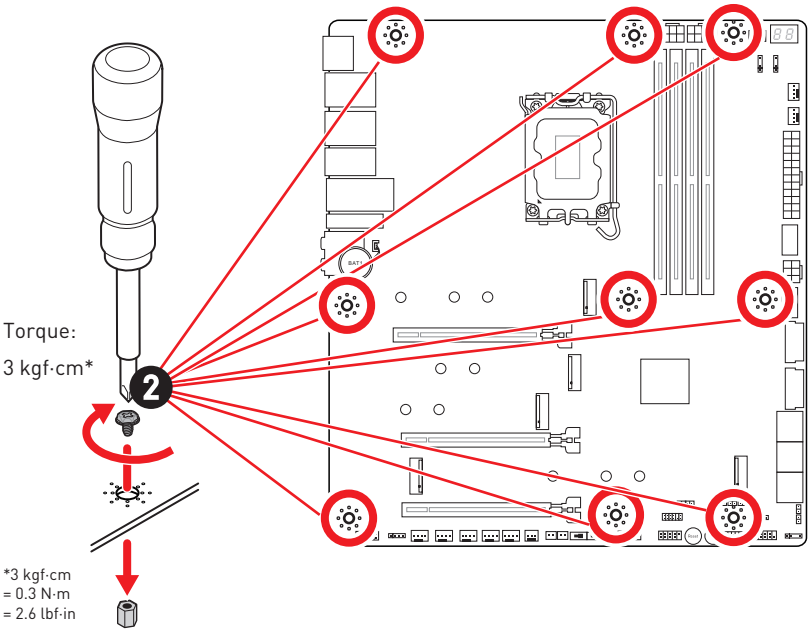

Connecting the Power Connectors

- http://youtu.be/gkDYyR_83I4

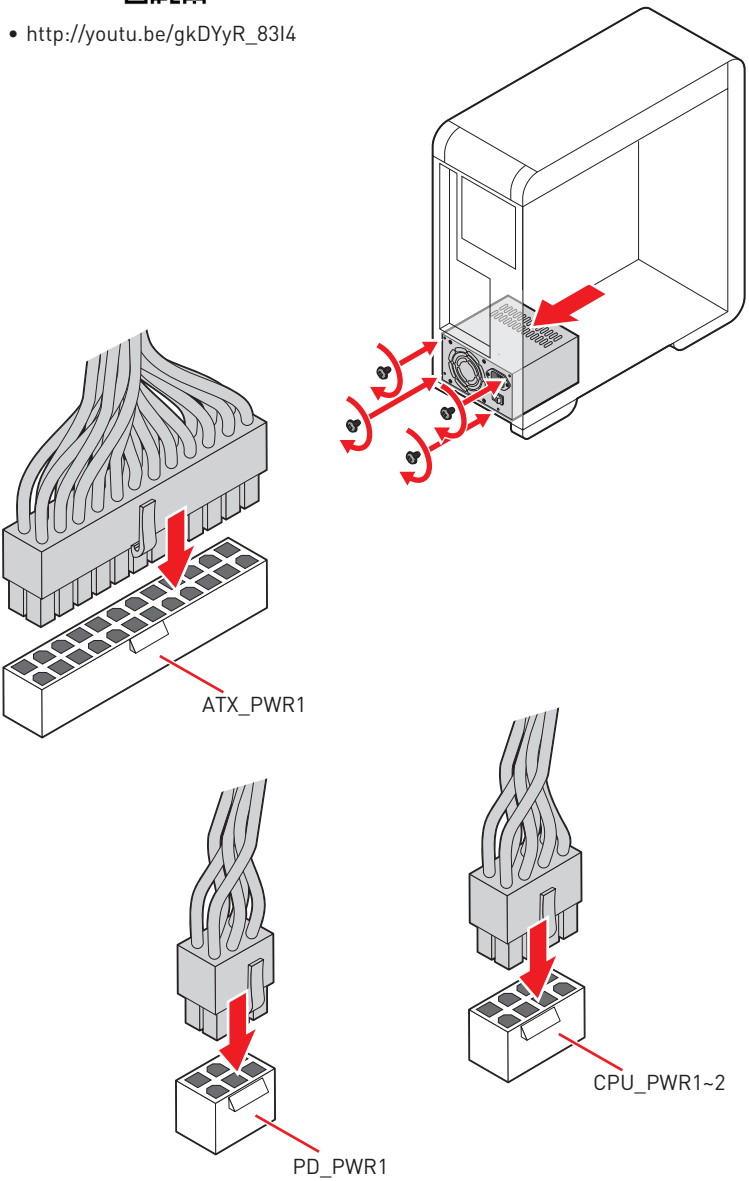

Installing SATA Drives

- http://youtu.be/RZsMpqxythc

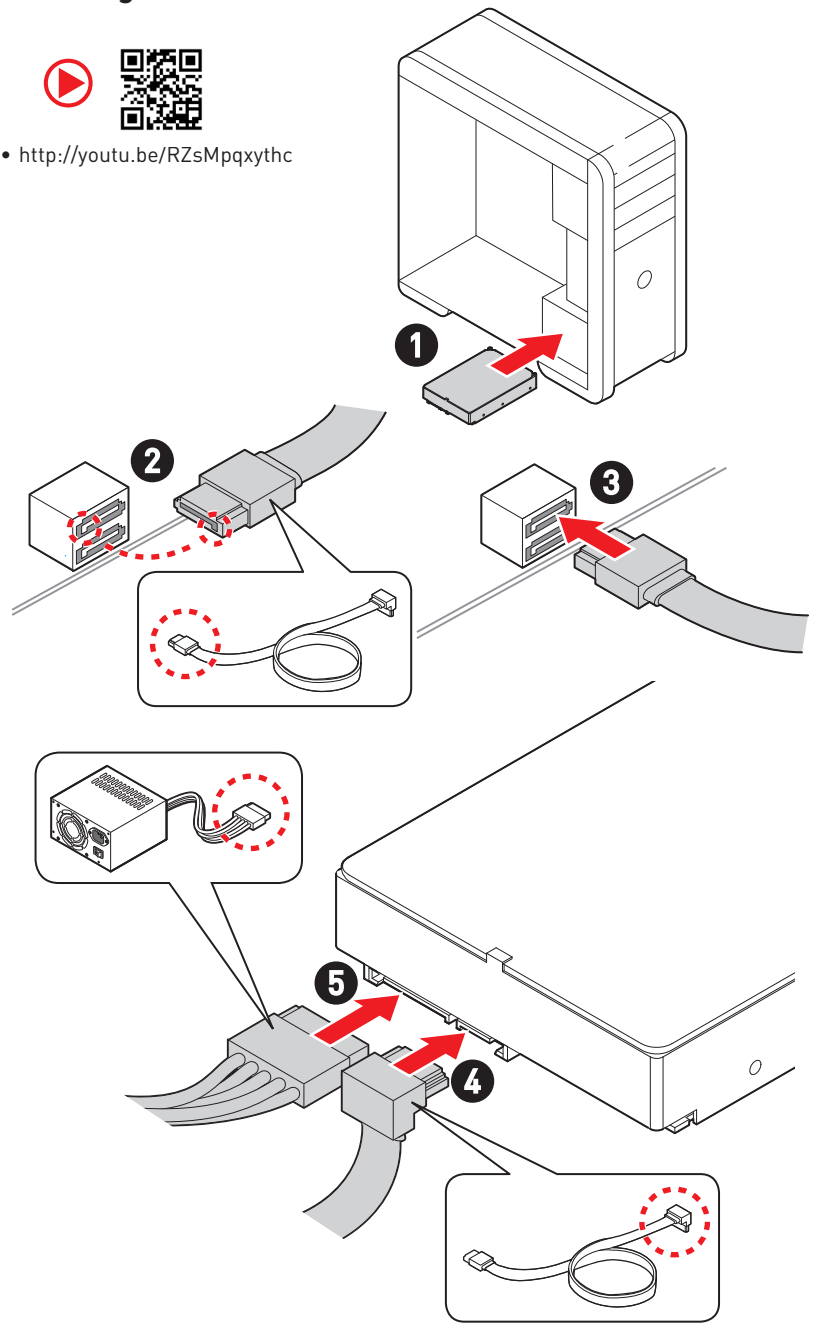

Installing a Graphics Card

- http://youtu.be/mG0GZpr9w_A

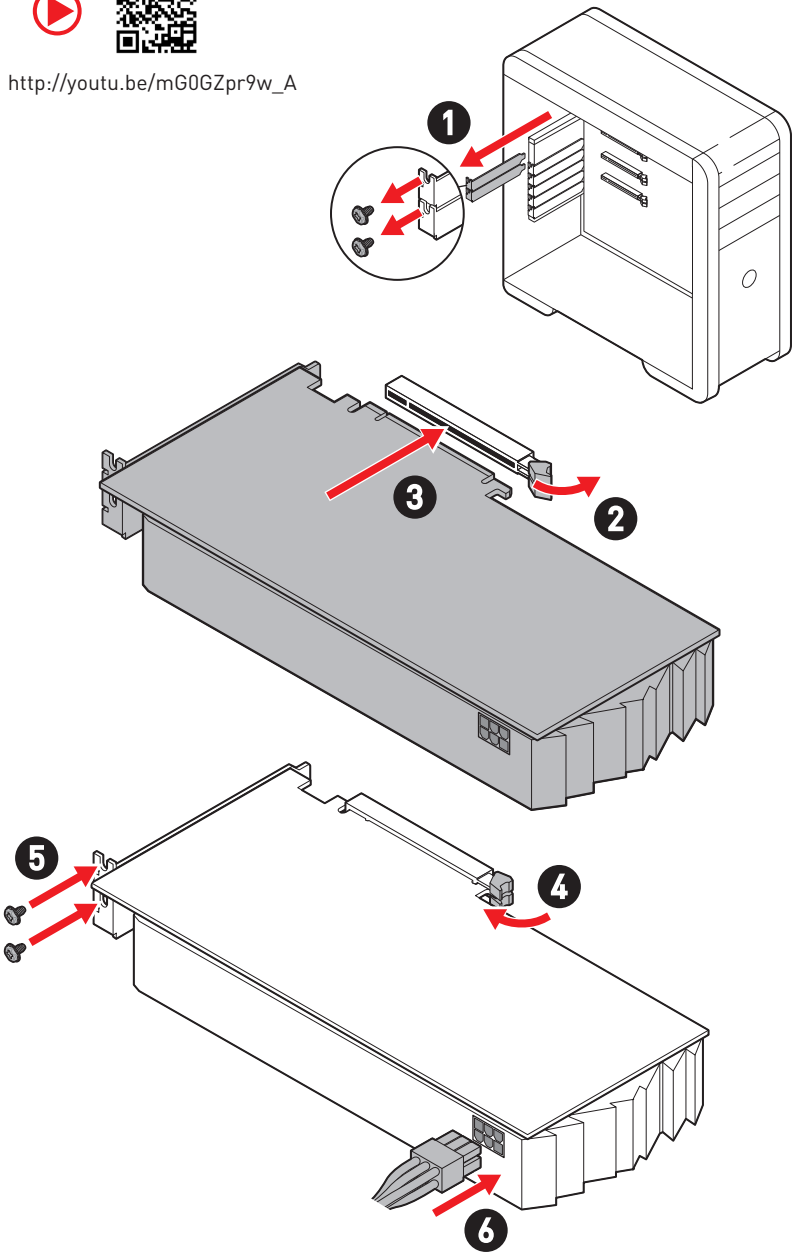

Connecting Peripheral Devices

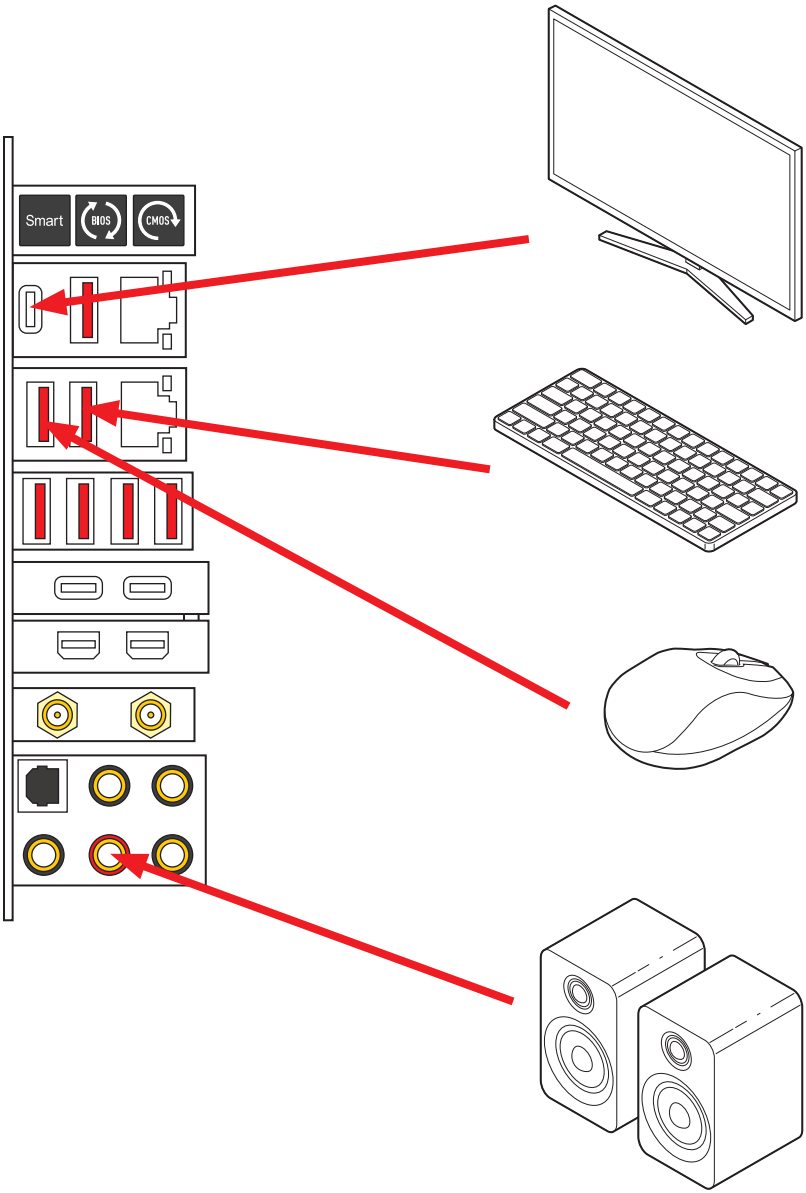

Power On

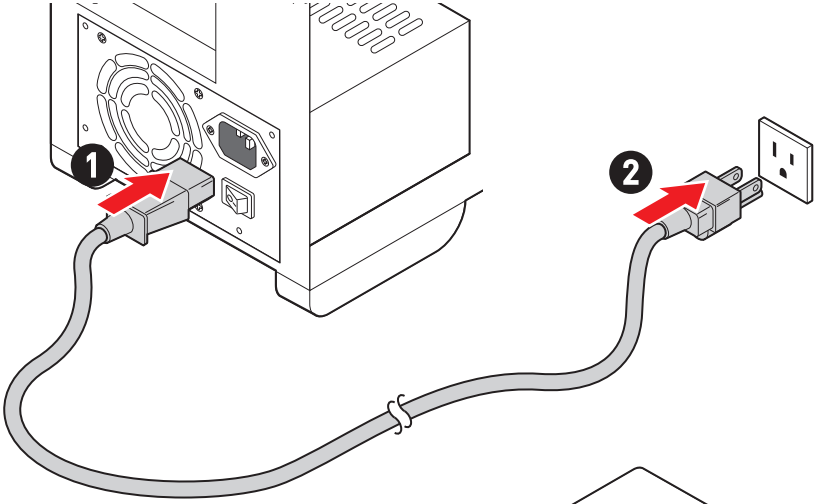

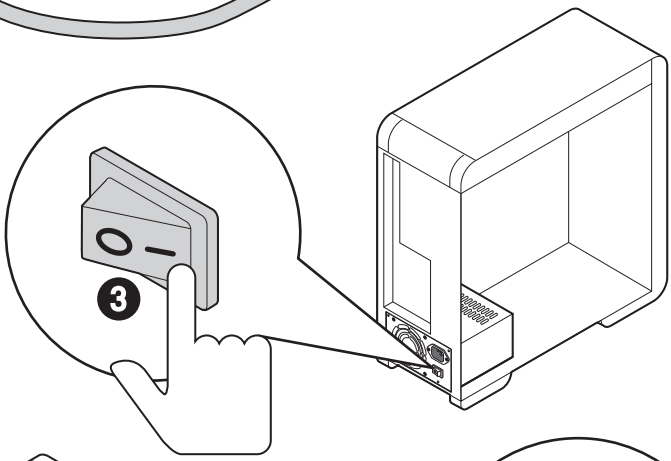

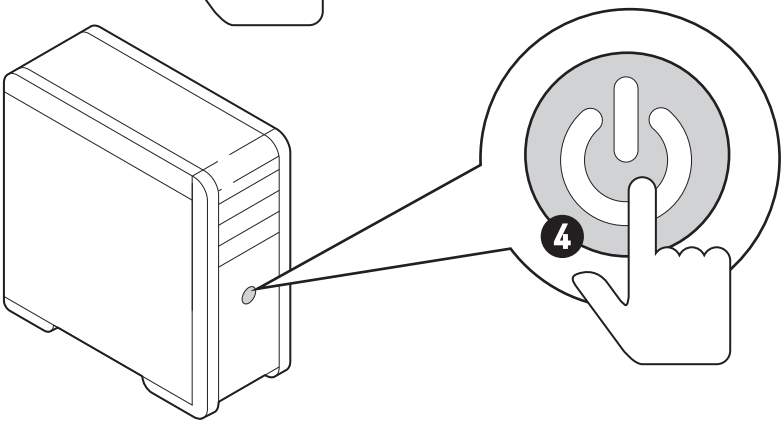

Specifications

CPU	• Supports 12th/ 13th Gen Intel® Core™ Processors, Pentium® Gold and Celeron® Processors* • Processor socket LGA1700 * Please go to www.msi.com to get the newest support status as new processors are released.
Chipset	Intel® Z790 Chipset

Memory	• 4x DDR5 memory slots, support up to 128GB*
	• Supports 1R 5600 MHz (by JEDEC & POR)
	  • 1DPC 1R Max speed up to 7800+ MHz
	  • 1DPC 2R Max speed up to 6600+ MHz
	  • 2DPC 1R Max speed up to 6400+ MHz
	  • 2DPC 2R Max speed up to 5600+ MHz
	• Supports Intel® XMP3.0 OC
	• Supports Dual-Controller Dual-Channel mode
	• Supports non-ECC, un-buffered memory
	* Please refer to www.msi.com for more information on compatible memory.

Expansion Slots	• 3x PCIe x16 slots
	  • Supports x16/x0, x8/x8
	  • PCI_E1 slot (From CPU)
	  • Supports up to PCIe 5.0 x16
	  • PCI_E2 slot* (From CPU)
	  • Supports up to PCIe 5.0 x8
	  • PCI_E3 slot (From Z790 Chipset)
	  • Supports up to PCIe 4.0 x4
	* M2_4 slot will be unavailable when installing in the PCI_E2 slot.

Onboard Graphics	• 1x DisplayPort over USB-C port, supporting a maximum resolution of 4K 60Hz*/** * Available only on processors featuring integrated graphics. ** Graphics specifications may vary depending on the CPU installed.
Multi-GPU	Supports AMD Multi-GPU

Continued on next column

Continued from previous column

Thunderbolt 4	Intel® JHL8540 Thunderbolt™ 4 Controller
	• 2x Thunderbolt™ 4 (USB-C) ports on the back panel
	  • Supports up to 40Gbps transfer rate with Thunderbolt devices
	  • Supports up to 20Gbps transfer rate with USB4 devices
	  • Supports up to 10Gbps transfer rate with USB 3.2 devices
	  • Supports up to 5V/3A ,15W power charging
	  • Each port can daisy-chain up to three Thunderbolt 4 devices or five Thunderbolt 3 devices
	  • Supports up to 8K display (need to connect the DisplayPort of the motherboard or discrete graphics card to the Mini DisplayPort Input port on the back panel)

SATA Ports	• 6x SATA 6Gb/s ports
	  • SATA 5~8 (From Z790 chipset)
	  • SATA A1~A2 (From ASM1061)
	* SATA7 will be unavailable when installing M.2 SATA SSD in the M2_5 slot.

Continued on next column

Continued from previous column

M.2 SSD Slots	• 5x M.2 slots (Key M)
	  • M2_1 slot (From CPU)
	  • Supports up to PCIe 4.0 x4
	  • Supports 2260/ 2280/ 22110 storage devices
	  • M2_2 slot (From Z790 chipset)
	  • Supports up to PCIe 4.0 x4
	  • Supports 2260/ 2280 storage devices
	  • M2_3 slot (From Z790 chipset)
	  • Supports up to PCIe 4.0 x4
	  • Supports up to SATA 6Gb/s
	  • Supports 2260/ 2280 storage devices
	  • M2_4 slot* (From CPU)
	  • Supports up to PCIe 5.0 x4
	  • Supports 2280 storage devices
	  • M2_5 slot* (From Z790 chipset)
	  • Supports up to PCIe 4.0 x4
	  • Supports up to SATA 6Gb/s
	  • Supports 2260/ 2280/ 22110 storage devices
	* M2_4 slot will be unavailable when installing devices in the PCI_E2 slot.
	** SATA7 will be unavailable when installing M.2 SATA SSD in the M2_5 slot.

RAID	• Supports RAID 0, RAID 1, RAID 5 and RAID 10 for SATA storage devices* • Supports RAID 0, RAID 1, RAID 5 and RAID 10 for M.2 NVMe storage devices * SATA_A1_A2 do not support RAID function.
Audio	Realtek® ALC4082 Codec + ES9280AQ PRO Combo DAC/HPA • 7.1-Channel USB High Performance Audio • Supports up to 32-bit/384kHz playback on front panel • Supports S/PDIF output
LAN	• 2x Intel® 2.5Gbps LAN controllers

Continued on next column

Continued from previous column

Wi-Fi & Bluetooth®	Intel® Wi-Fi 6E • The Wireless module is pre-installed in the M.2 (Key-E) slot • Supports MU-MIMO TX/RX, 2.4GHz/ 5GHz/ 6GHz*(160MHz) up to 2.4Gbps • Supports 802.11 a/ b/ g/ n/ ac/ ax • Supports Bluetooth® 5.3**, FIPS, FISMA * Wi-Fi 6E 6GHz may depend on every country's regulations and will be ready in Windows 10 build 21H1 and Windows 11. ** Bluetooth 5.3 will be ready in Windows 10 build 21H1 and Windows 11.
Power Connectors	• 1x 24-pin ATX main power connector • 2x 8-pin ATX 12V power connectors • 1x 6-pin PD power connector* * To achieve USB PD 60W charging for JUSB6, PD_PWR1 connector needs to be connected to the power supply unit.

Internal USB Connectors	• 2x USB 3.2 Gen 2x2 20Gbps Type-C front panel connectors*/** (From Z790 chipset)
	  • Supports USB PD 60W fast charging
	• 2x USB 3.2 Gen 1 5Gbps connectors (From Hub GL3523)
	  • Supports additional 4 USB 3.2 Gen 1 5Gbps ports
	• 2x USB 2.0 Type-A connectors (From Hub GL850G)
	  • Supports additional 4 USB 2.0 ports
	* JUSB6 doesn't support USB 2.0 device.
	** To achieve 60W PD fast charging for JUSB6, the PD_PWR1 connector needs to be connected to the power supply unit.

Fan Connectors	• 1x 4-pin CPU fan connector • 2x 4-pin water-pump fan connectors • 5x 4-pin system fan connectors
System Connectors	• 1x Front panel audio connector • 2x System panel connectors • 1x Chassis Intrusion connector • 1x 3-pin Water Flow connector • 1x TPM module connector • 1x Tuning Controller connector

Continued on next column

Continued from previous column

Buttons	• 1x Power button • 1x Reset button
Jumpers	• 1x Clear CMOS jumper • 1x OC safe boot jumper • 1x Slow mode jumper • 2x Low temperature booting jumpers
Switches	• 1x EZ LED Control switch • 1x Multi-BIOS switch
LED Features	• 1x 4-pin RGB LED connector • 3x 3-pin ARGB Gen2 LED connectors • 4x EZ Debug LED • 1x 2-Digit Debug Code LED
Back Panel Connectors	• 1x Clear CMOS button • 1x Flash BIOS button • 1x Smart button • 2x LAN (RJ45) ports • 3x USB 3.2 Gen 2 10Gbps Type-A ports (From Z790 chipset) • 4x USB 3.2 Gen 2 10Gbps Type-A ports (From Hub-GL3590) • 1x USB 3.2 Gen 2 10Gbps Type-C port (From Z790 chipset) with DisplayPort Alt Mode • 2x Thunderbolt 4 USB-C ports • 2x Mini DisplayPort Inputs (for Thunderbolt 4 pass through) • 2x Wi-Fi Antenna connectors • 5x OFC audio jacks • 1x Optical S/PDIF Out connector
I/O Controller	NUVOTON NCT6687D-R Controller Chip

Continued on next column

Continued from previous column

Hardware Monitor	• CPU/ System/ Chipset temperature detection • CPU/ System/ Pump fan speed detection • CPU/ System/ Pump fan speed control
Form Factor	• E-ATX Form Factor • 10.9 in. x 12 in. (277 mm x 305 mm)
BIOS Features	• Dual BIOS • 2x 256 Mb flash • UEFI AMI BIOS • ACPI 6.4, SMBIOS 3.5 • Multi-language
Software	• Drivers • MSI Center • Intel Extreme Tuning Utility • CPU-Z MSI GAMING • Norton 360 Deluxe • 7-ZIP • AIDA64 Extreme - MSI Edition • MSI APP Player (BlueStacks)

Special Features

MSI Center Features

- Gaming Mode
- Smart Priority
- Game Highlights
- Mystic Light
- Ambient Link
- Frozr AI Cooling
- User Scenario
- True Color
- Live Update
- Hardware Monitoring
- Super Charger
- Devices Speed Up

Thermal Features

- All Aluminum Design
- Stacked Fin Array
- Cross Heat-pipe
- M.2 Shield Frozr
- K7 MOSFET thermal pad / Extra choke pad
- Fan headers (CPU + PUMP + SYSTEM)

Performance

- Core Boost
- VRM Power Design (VCPU / VGT / AUX)
- Dual CPU Power(2x8 pin)
- OC Engine
- Memory Boost
- Memory Force
- Lightning Gen 5 PCI-E / M.2 Slot
- Lightning Gen 4 PCI-E / M.2 Slot
- Multi GPU Support
- Thunderbolt 4
- Front USB Type-C
- USB with PD
- Server Grade PCB
- 2oz Copper thickened PCB

DIY Friendly

- PCI-E Steel Armor
- Pre-installed I/O Shield
- Screwless M.2 Shield Frozr
- EZ M.2 Clips
- EZ DEBUG LED
- EZ LED Control
- Smart Button
- System Saver

Audio

- Audio Boost 5 HD

RGB Support

- Mystic Light
- Mystic Light Extension (RGB)
- Mystic Light Extension (A-RAINBOW V2)
- Ambient Link Support

BIOS

- Click BIOS 5

Package Contents

Please check the contents of your motherboard package. It should contain:

Board

- 1x Motherboard

Documentation

- 1x Quick installation guide
- 1x European Union regulatory notice

Application

- 1x USB drive with drivers & utilities

Cables

- 2x SATA 6Gb/s cables
- 1x Thermistor cable
- 1x JRGB extension cable (1 to 2)
- 1x JARGB extension cable
- 1x DP to Mini-DP cable
- 1x Front panel cable

Accessories

- 1x Wi-Fi antenna set
- 2x EZ M.2 Clip packages (1 set/pack)
- 3x M.2 plate screw packages (1 set/pack)
- 1x M.2 screw package (3 pcs/pack)
- 1x Cable sticker

Important

- *There is an ISO file in the supplied USB drive. Please do not delete it accidentally. For more information on installing drivers, please refer to* ***Installing OS, Drivers & MSI Center*** *chapter.*
- *If any of the above items are damaged or missing, please contact your retailer.*

Back Panel Connectors

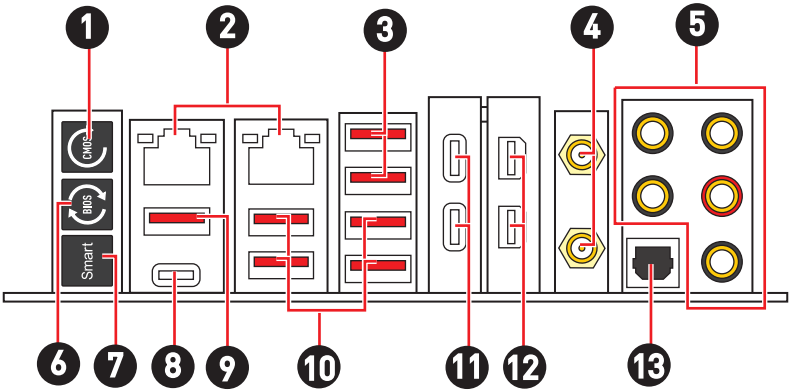

Item	Description
1	Clear CMOS button - Power off your computer. Press and hold the Clear CMOS button for about 5-10 seconds to reset BIOS to default values.
2	2.5 Gbps LAN (RJ45) ports
3	USB 3.2 Gen 2 10Gbps Type-A ports (From Z790 chipset)
4	Wi-Fi antenna connectors
5	Audio jacks
6	Flash BIOS button - Please refer to page 73 for details about updating BIOS with Flash BIOS button.
7	Smart button - We provide 4 functions for the smart button to achieve. Please refer to the BIOS manual for details about selecting the smart button function. • **Reset (default)** - press the smart button to reset the system. • **Mystic Light on/ off** - press the smart button to turn on/ off all the onboard LEDs. The Mystic Light on/ off function mode is unavailable when the LED_SW1 (EZ LED Control) switch turns OFF. • **Safe Boot** - press and hold the smart button and start the system simultaneously to boot in Safe Boot mode. The system will boot with default and lower the PCIe (from CPU) mode. • **Turbo Fan** - press the smart button for all fans to operate full speed or default speeds.

Item	Description
8	USB 3.2 Gen 2 10Gbps Type-C port (From Z790 chipset) • DisplayPort Alt Mode
9	USB 3.2 Gen 2 10Gbps Type-A port (From Z790 chipset) • Flash BIOS port
10	USB 3.2 Gen 2 10Gbps Type-A ports (From Hub-GL3590)
11	Thunderbolt 4 USB-C ports (From JHL8540) • DisplayPort Alt Mode • USB4 20Gbps • Power Delivery up to 15W
12	Mini DisplayPort Inputs (for Thunderbolt 4 pass through)
13	Optical S/PDIF Out connector

LAN Port LED Status Table

Link/ Activity LED	
Status	**Description**
Off	No link
Yellow	Linked
Blinking	Data activity

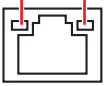

Speed LED	
Status	**Speed**
Off	10 Mbps
Green	100/1000 Mbps
Orange	2.5 Gbps

Audio Jacks Connection

Audio jacks to headphone and microphone diagram

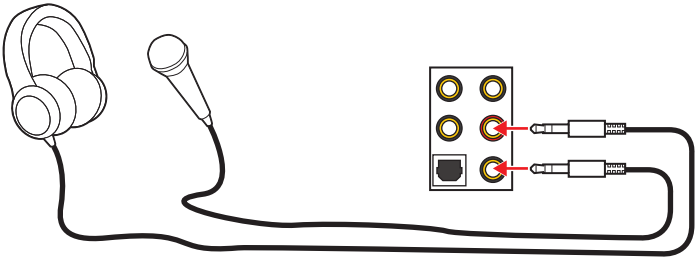

Audio jacks to stereo speakers diagram

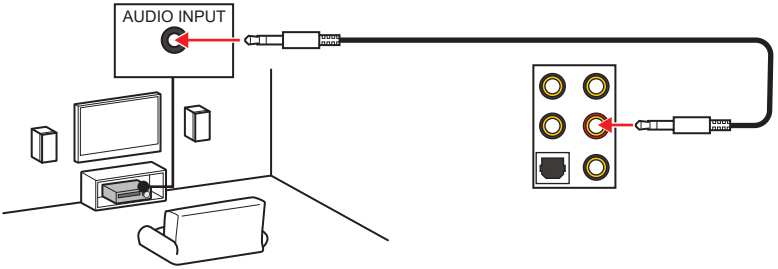

Audio jacks to 4-channel speakers diagram

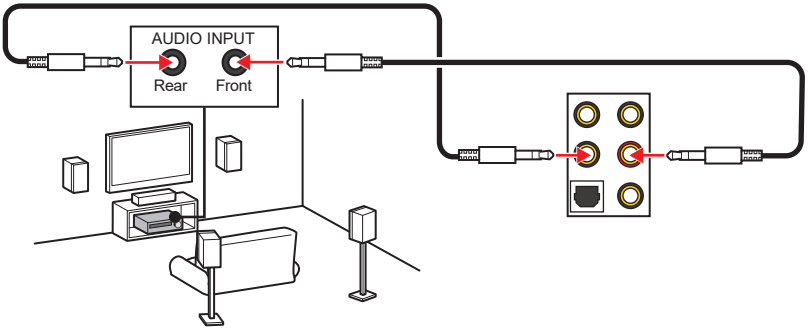

Audio jacks to 5.1-channel speakers diagram

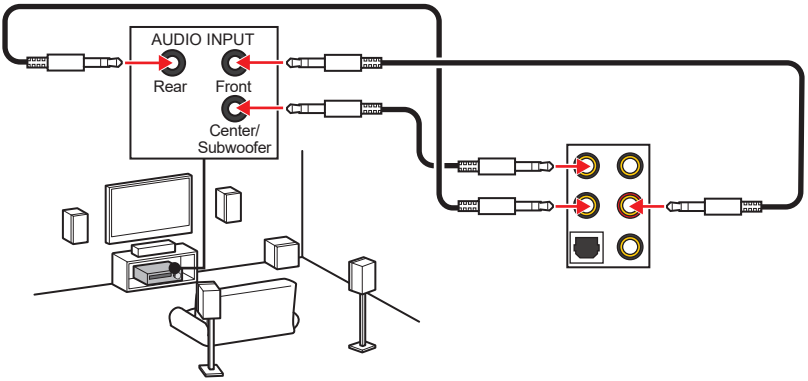

Audio jacks to 7.1-channel speakers diagram

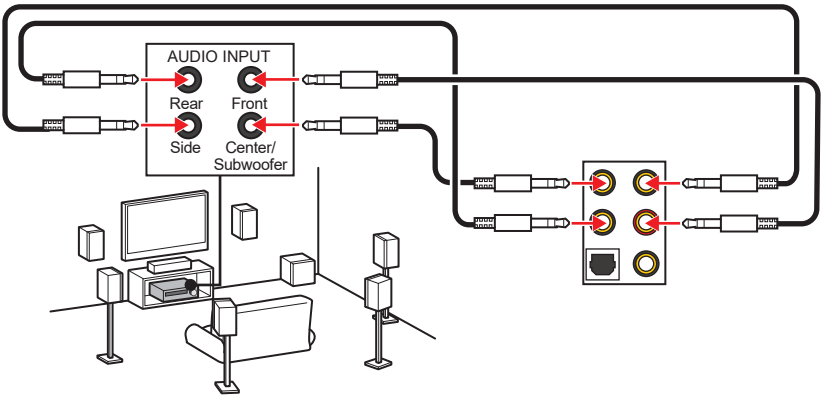

Installing Antennas

1. Combine the antenna with the base.
2. Screw two antenna cables tight to the Wi-Fi antenna connectors as shown.

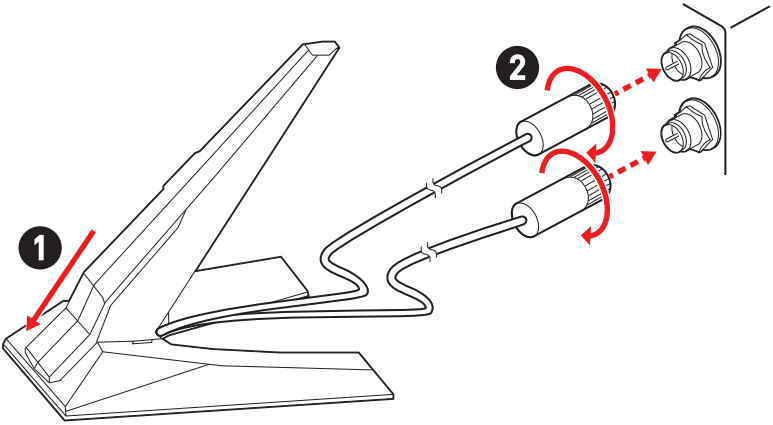

3. Place the antenna as high as possible.

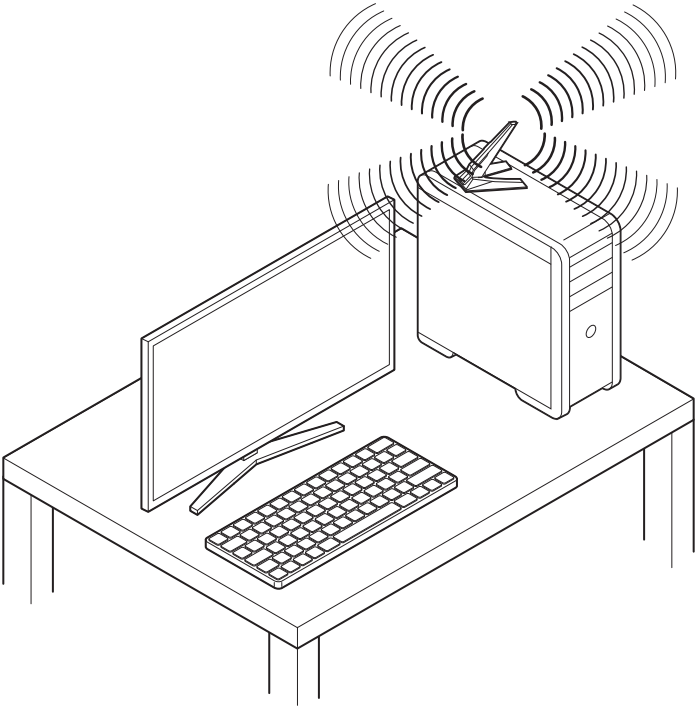

Connecting Thunderbolt Devices via Daisy-chain

Daisy-chain is a method of connecting multiple devices to a PC with only one output terminal.

Daisy-chain allows you to connect multiple thunderbolt devices to a single thunderbolt port on the back panel.

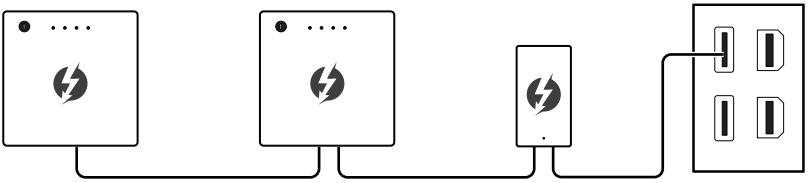

You can also daisy chain monitor by connecting graphics card to the Mini DisplayPort Input port on the back panel.

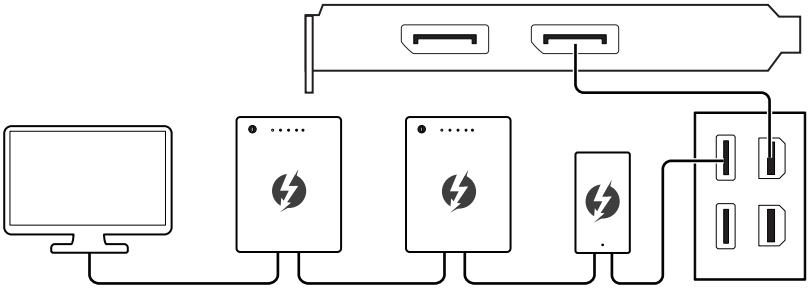

If you want to connect USB devices, please place them at the end of the chain.

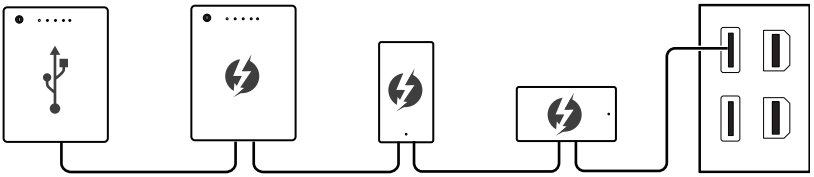

Overview of Components

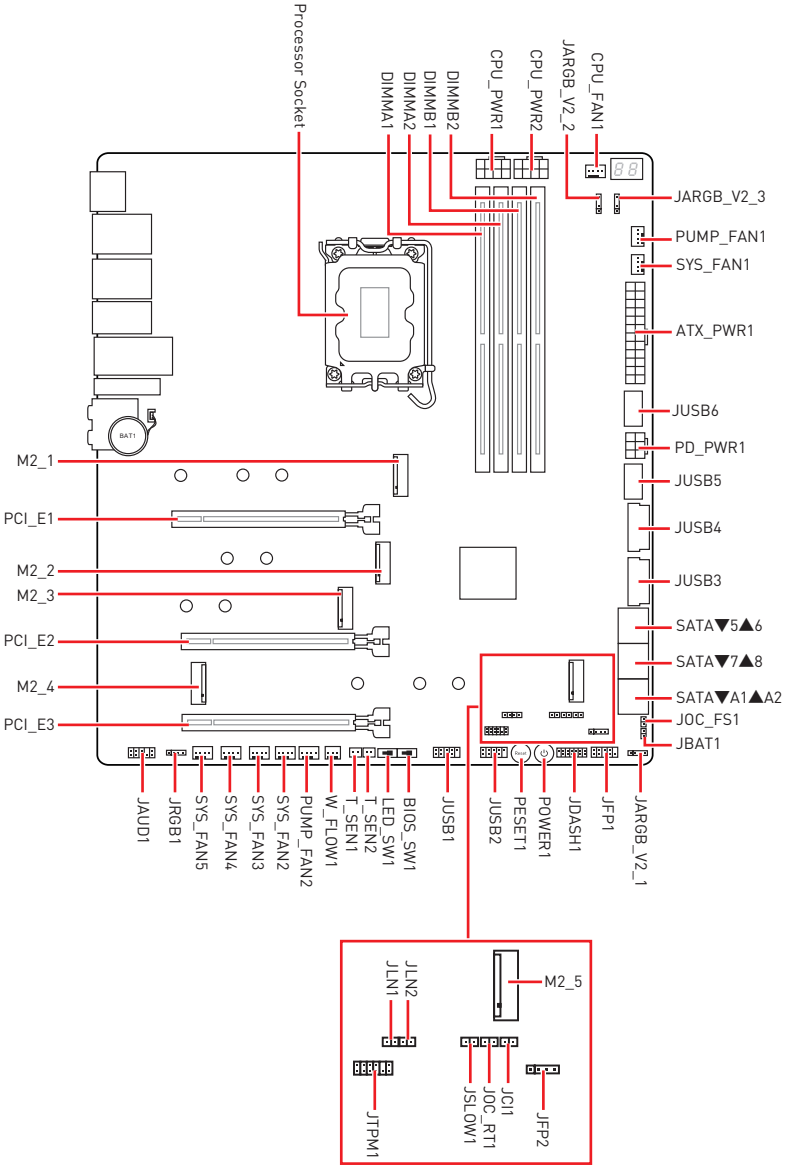

CPU Socket

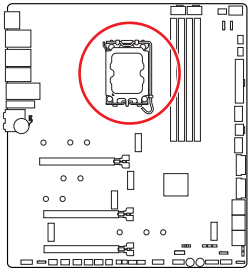

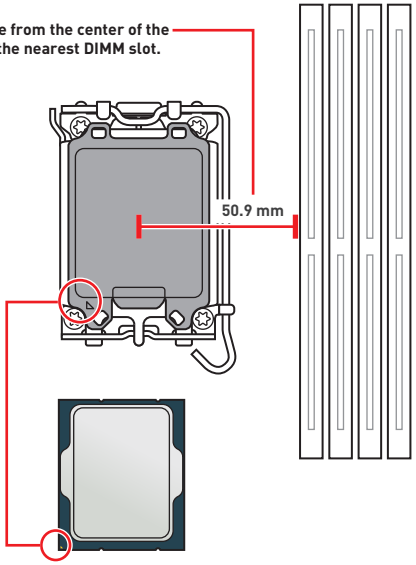

Introduction to the LGA1700 CPU

The surface of the LGA1700 CPU has four **notches** and a **golden triangle** to assist in correctly lining up the CPU for motherboard placement. The golden triangle is the Pin 1 indicator.

Important

- *Always unplug the power cord from the power outlet before installing or removing the CPU.*
- *Please retain the CPU protective cap after installing the processor. MSI will deal with Return Merchandise Authorization (RMA) requests if only the motherboard comes with the protective cap on the CPU socket.*
- *When installing a CPU, always remember to install a CPU heatsink. A CPU heatsink is necessary to prevent overheating and maintain system stability.*
- *Confirm that the CPU heatsink has formed a tight seal with the CPU before booting your system.*
- *Overheating can seriously damage the CPU and motherboard. Always make sure the cooling fans work properly to protect the CPU from overheating. Be sure to apply an even layer of thermal paste (or thermal tape) between the CPU and the heatsink to enhance heat dissipation.*
- *Whenever the CPU is not installed, always protect the CPU socket pins by covering the socket with the plastic cap.*
- *If you purchased a separate CPU and heatsink/ cooler, Please refer to the documentation in the heatsink/ cooler package for more details about installation.*
- *This motherboard is designed to support overclocking. Before attempting to overclock, please make sure that all other system components can tolerate overclocking. Any attempt to operate beyond product specifications is not recommended. MSI® does not guarantee the damages or risks caused by inadequate operation beyond product specifications.*

DIMM Slots

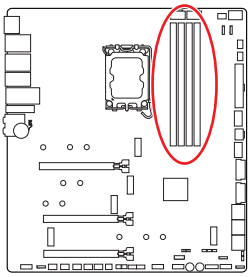

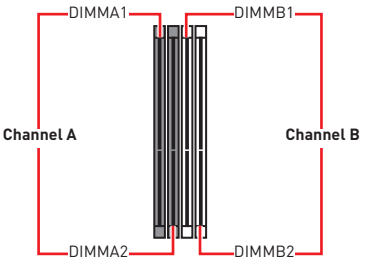

Memory module installation recommendation

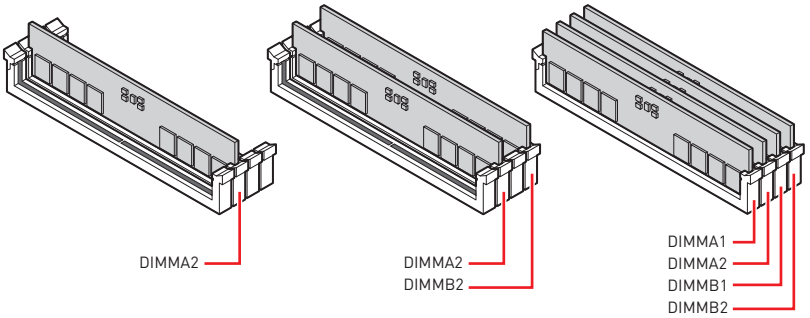

Important

- *Always insert memory modules in the **DIMMA2** slot first.*
- *To ensure system stability for Dual channel mode, memory modules must be of the same type, number and density.*
- *Some memory modules may operate at a lower frequency than the marked value when overclocking due to the memory frequency operates dependent on its Serial Presence Detect (SPD). Go to BIOS and find the **DRAM Frequency** to set the memory frequency if you want to operate the memory at the marked or at a higher frequency.*
- *It is recommended to use a more efficient memory cooling system for full DIMMs installation or overclocking.*
- *The stability and compatibility of installed memory module depend on installed CPU and devices when overclocking.*
- *Please refer to www.msi.com for more information on compatible memory.*

PCI_E1~3: PCIe Expansion Slots

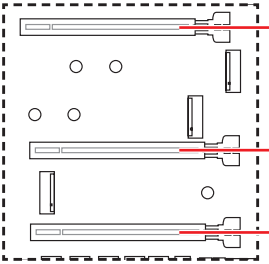

Important

- *If you install a large and heavy graphics card, you need to use a tool such as **MSI Graphics Card Bolster** to support its weight to prevent deformation of the slot.*
- *For a single PCIe x16 expansion card installation with optimum performance, using the **PCI_E1** slot is recommended.*
- *When adding or removing expansion cards, always turn off the power supply and unplug the power supply power cable from the power outlet. Read the expansion card's documentation to check for any necessary additional hardware or software changes.*
- *M2_4 slot will be unavailable when installing in the PCI_E2 slot.*

Multiple graphics cards installation recommendation

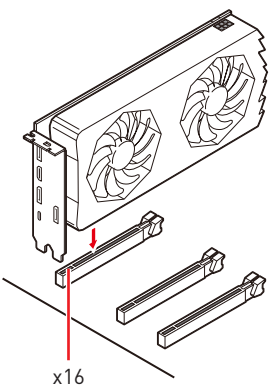

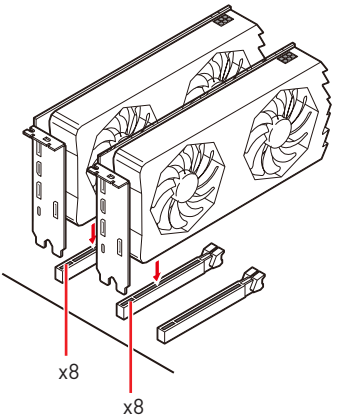

M2_1~5: M.2 Slots (Key M)

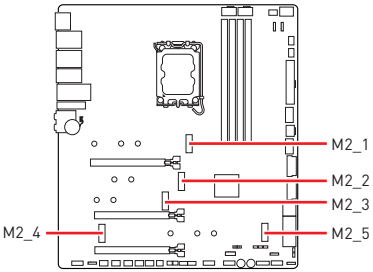

Watch the video to learn how to Install M.2 SSD with Screwless M.2 Shield Frozr heatsink.

- https://youtu.be/J88vcXeLido

Important

- *Intel® RST only supports PCIe M.2 SSD with UEFI ROM.*
- *If your M.2 SSD equips its own heatsink, please remove the M.2 plates or rubber cubes in the M.2 slots before installing M.2 SSD. Do not re-install the heatsinks supplied with your motherboard.*
- *M2_4 slot will be unavailable when installing in the PCI_E2 slot.*
- *SATA7 will be unavailable when installing M.2 SATA SSD in the M2_5 slot.*

Installing M.2 module into M2_1 slot

1. Press and hold the end button of Screwless M.2 Shield Frozr heatsink.

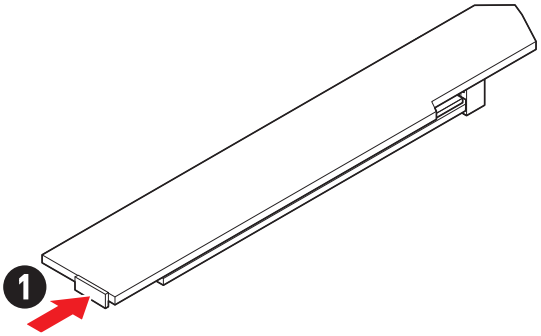

2. Slightly lift up the end part of Screwless M.2 Shield Frozr heatsink and move it forward to uninstall the heatsink.

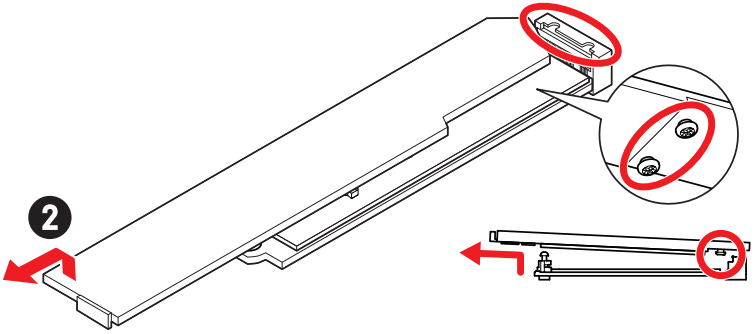

3. Remove the protective films from the M.2 thermal pads on the M.2 plate.

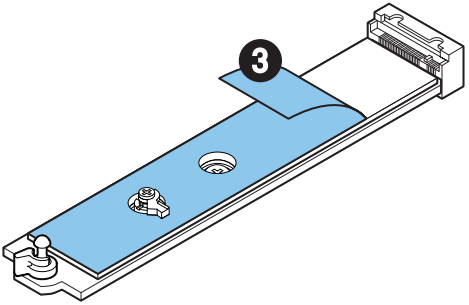

4. Remove or exchange the screws according to your SSD length. Skip this step, if you install 2280 SSD.

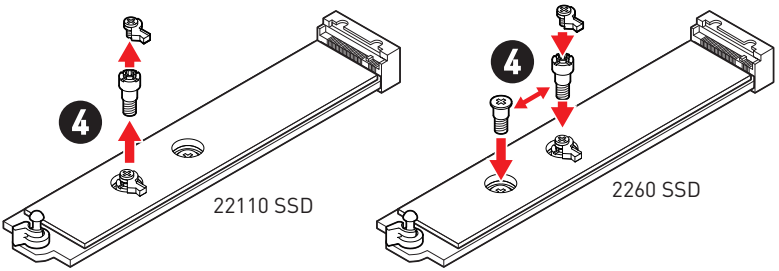

5. Insert your M.2 SSD into the M.2 slot at a 30-degree angle.
6. Rotate the EZ M.2 Clip to fix the M.2 SSD.

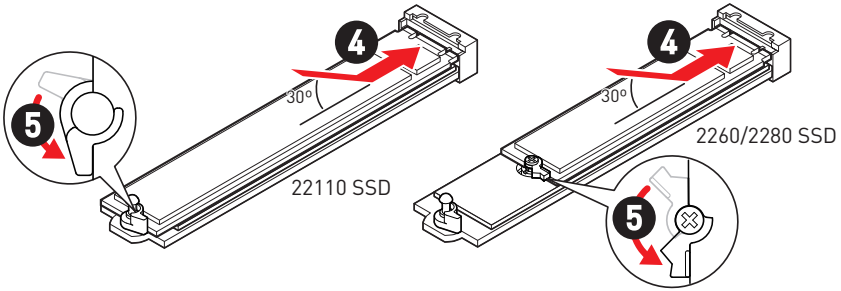

7. Remove the protective films from the thermal pads under Screwless M.2 Shield Frozr heatsink.
8. Align the tenons under Screwless M.2 Shield Frozr heatsink with the notches, and then put the heatsink back in place.
9. Press the end side of the Screwless M.2 Shield Frozr heatsink down to lock it completely.

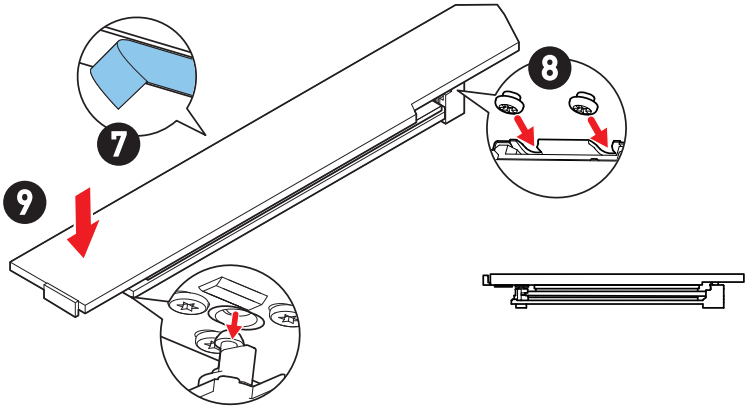

Installing M.2 module into M2_2 & M2_3 slots

1. Loosen the screws of M.2 Shield Frozr heatsink.
2. Lift the M.2 Shield Frozr heatsink up and remove it.

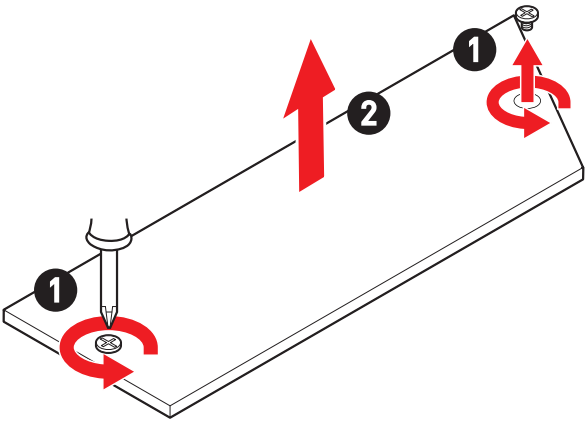

3. Remove the protective films from the M.2 thermal pads on the M.2 plate.

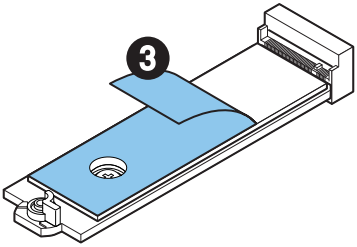

4. If you install 2260 SSD, remove the screw from the M.2 plate and then install supplied EZ M.2 Clip kit on the M.2 plate. Skip this step if you install 2280 SSD.

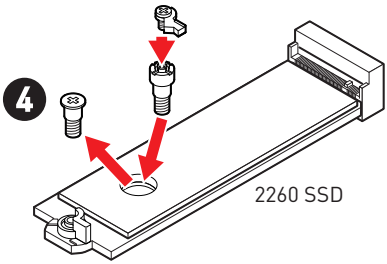

5. Insert your M.2 SSD into the M.2 slot at a 30-degree angle.
6. Rotate the EZ M.2 Clip to fix the M.2 SSD.

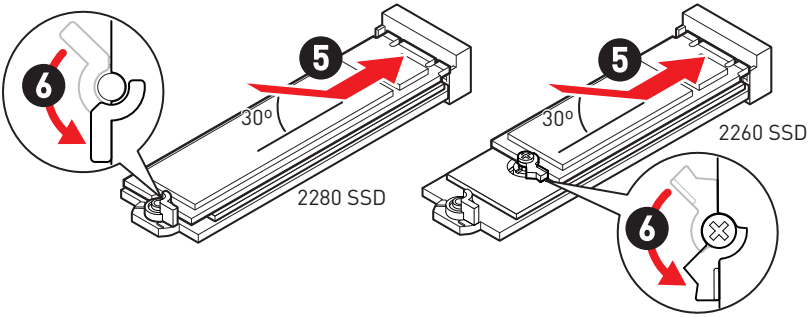

7. Remove the protective films from the thermal pads under the M.2 Shield Frozr heatsink.
8. Put the M.2 Shield Frozr heatsink back in place and secure it.

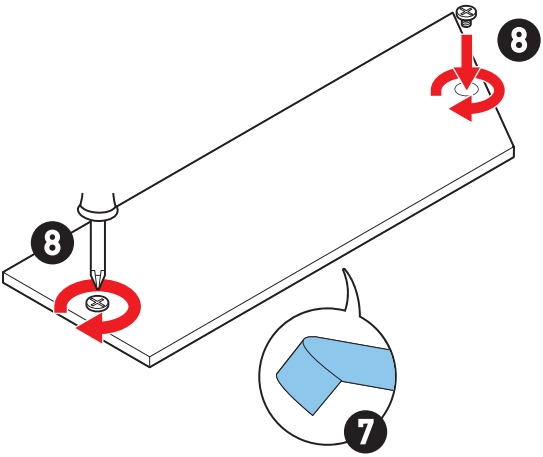

Installing M.2 module into M2_4 & M2_5 slots

1. Loosen the screws of M.2 Shield Frozr heatsink.
2. Lift up the M.2 Shield Frozr heatsink and remove it.

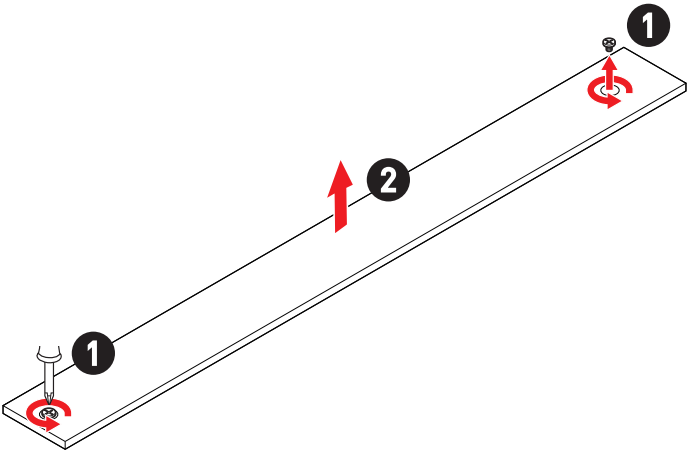

3. Remove the protective films from the M.2 thermal pads on the M.2 plate.

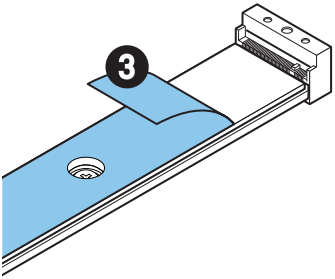

4. Please follow the below instructions according to your SSD length. Skip this step if you install 2280 SSD into M2_5 slot.

- **Installing 2260 SSD into M2_5 slot**

  Remove the installed standoff from the M.2 plate and install EZ M.2 Clip in the 2260 screw hole.

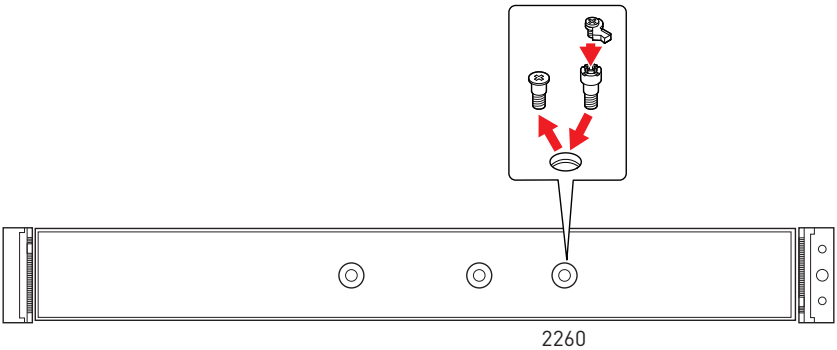

- **Installing 22110 SSD into M2_5 slot**

  Remove the installed EZ M.2 Clip in the 2280 screw hole and remove the upper component of EZ M.2 Clip in the 22110 screw hole.

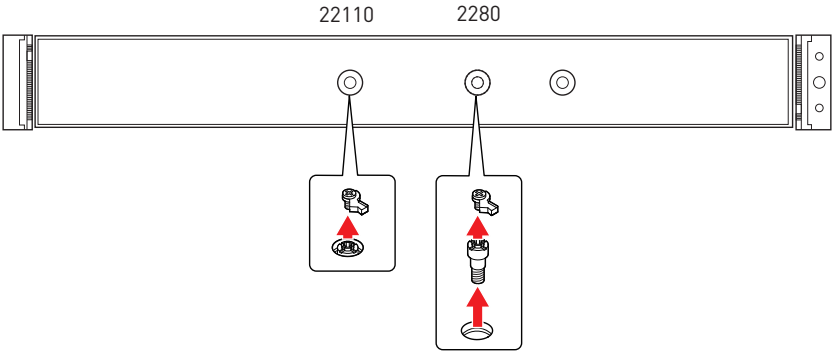

5. Insert your M.2 SSDs into M.2 slots at a 30-degree angle.

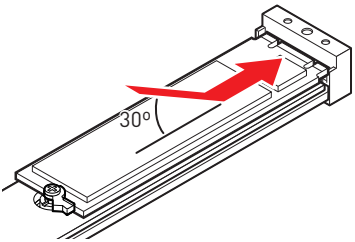

6. Please follow the below instructions according to your SSD length.

- **Installing 2260/2280 SSD into M2_5 slot**

  Rotate the EZ M.2 Clip to fix the M.2 SSDs.

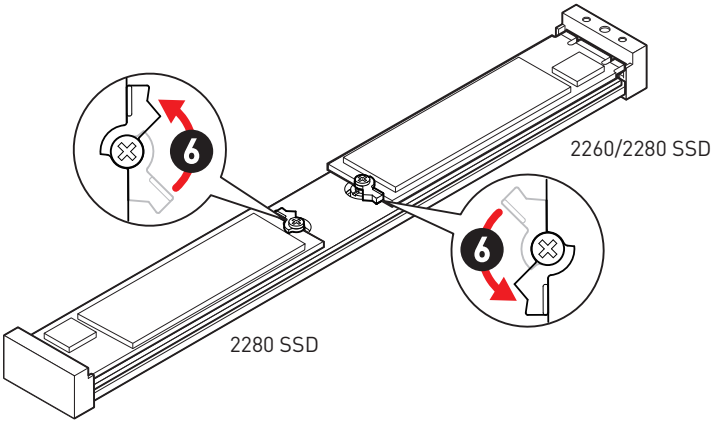

- **Install 22110 SSD into M2_5 slot**

  Secure the M.2 SSDs with the supplied M.2 screw.

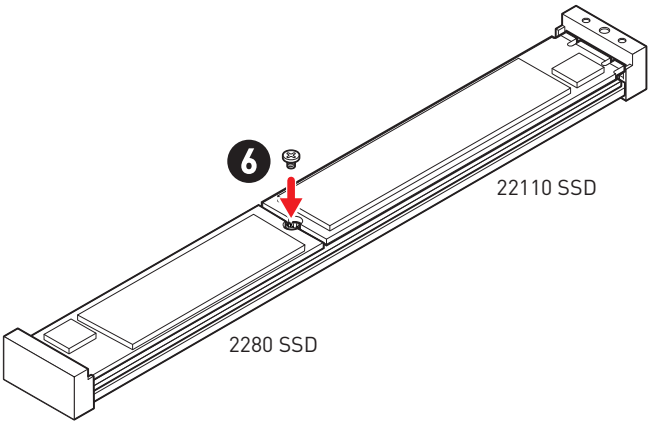

7. Remove the protective film from the thermal pad under the M.2 Shield Frozr heatsink.
8. Put the M.2 Shield Frozr heatsink back in place and secure it.

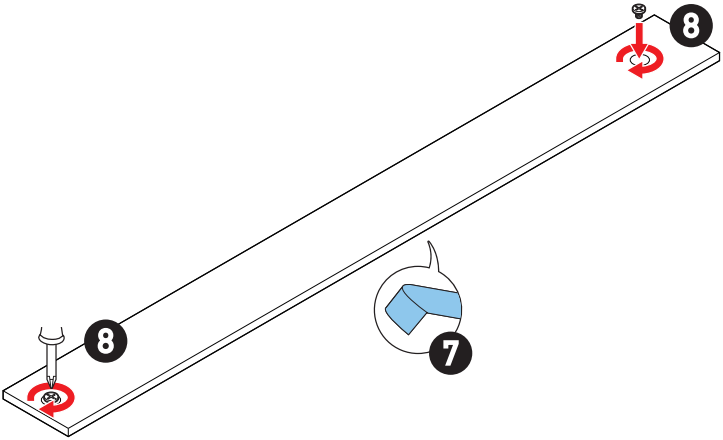

SATA_5~8 & SATA_A1~A2: SATA 6Gb/s Connectors

These connectors are SATA 6Gb/s interface ports. Each connector can connect to one SATA device.

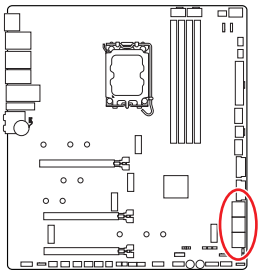

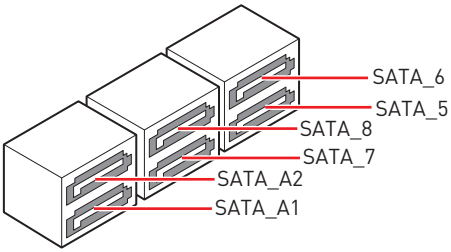

Important

- *Please do not fold the SATA cable at a 90-degree angle. Data loss may result during transmission otherwise.*
- *SATA cables have identical plugs on either sides of the cable. However, it is recommended that the flat connector be connected to the motherboard for space saving purposes.*
- *SATA7 will be unavailable when installing M.2 SATA SSD in the M2_5 slot.*

JAUD1: Front Audio Connector

This connector allows you to connect audio jacks on the front panel.

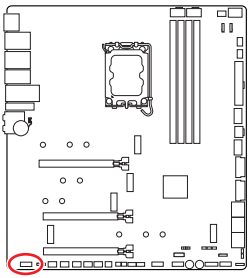

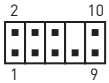

Pin	Signal Name	Pin	Signal Name
1	MIC L	2	Ground
3	MIC R	4	NC
5	Head Phone R	6	MIC Detection
7	SENSE_SEND	8	No Pin
9	Head Phone L	10	Head Phone Detection

JFP1, JFP2: Front Panel Connectors

The JFP1 connector controls the power on, power reset, and the LEDs on your PC case/chassis. Power Switch/ Reset Switch headers allow you to connect power button/ reset button. Power LED header connects to LED light on the PC case, and HDD LED header indicates the activity of the hard disk. The JFP2 connector is for Buzzer and Speaker. To connect the cables from PC case to the right pins, please refer to the following images below.

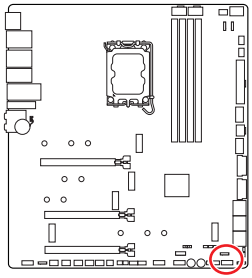

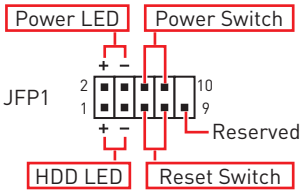

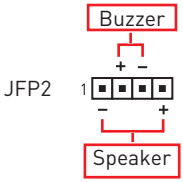

Important

Please note that Power LED and HDD LED have positive and negative connection, you need to link up the cable to the corresponding positive and negative port on the motherboard. Otherwise, LEDs won't work properly.

JDASH1: Tuning Controller Connector

This connector is used to connect an optional Tuning Controller module.

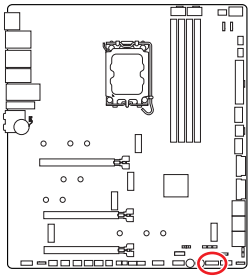

Pin	Signal Name	Pin	Signal Name
1	No Pin	2	NC
3	MCU_SMB_SCL_M	4	MCU_SMB_SDA_M
5	VCC5	6	Ground
7	PSIN#_R	8	FP_RST#_R
9	OC_RETRY#	10	OC_FS
11	BLK+	12	BLK-
13	CLRCMOS_EN	14	NC

W_FLOW1: Water Flow Meter Connector

This connector allows you to connect a water flow meter to monitor the flow rate of your liquid cooling system.

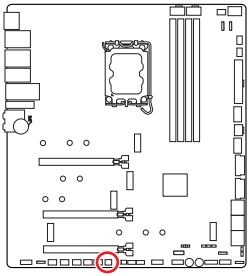

Pin	Signal Name	Pin	Signal Name
1	Ground	2	WFLOW PWR
3	WFLOW IN		

JCI1: Chassis Intrusion Connector

This connector allows you to connect the chassis intrusion switch cable.

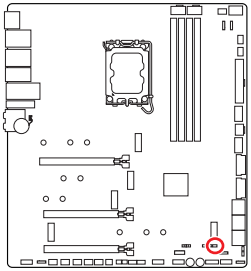

Normal (default)

Trigger the chassis intrusion event

Using chassis intrusion detector

1. Connect the **JCI1** connector to the chassis intrusion switch/ sensor on the chassis.
2. Close the chassis cover.
3. Go to **BIOS > SETTINGS > Security > Chassis Intrusion Configuration**.
4. Set **Chassis Intrusion** to **Enabled**.
5. Press **F10** to save and exit and then press the **Enter** key to select **Yes**.
6. Once the chassis cover is opened again, a warning message will be displayed on screen when the computer is turned on.

Resetting the chassis intrusion warning

1. Go to **BIOS > SETTINGS > Security > Chassis Intrusion Configuration**.
2. Set **Chassis Intrusion** to **Reset**.
3. Press **F10** to save and exit and then press the Enter key to select **Yes**.

POWER1, RESET1: Power Button, Reset Button

The Power/ Reset button allows you to power on/ reset the computer.

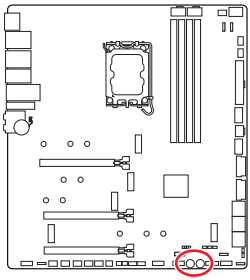

Reset button

Power button

CPU_PWR1~2, ATX_PWR1, PD_PWR1: Power Connectors

These connectors allow you to connect an ATX power supply.

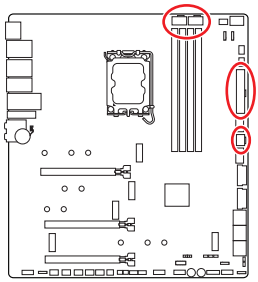

CPU_PWR1~2

ATX_PWR1

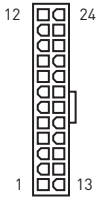

PD_PWR1

CPU_PWR1~2

Pin	Signal Name	Pin	Signal Name
1	Ground	2	Ground
3	Ground	4	Ground
5	+12V	6	+12V
7	+12V	8	+12V

ATX_PWR1

Pin	Signal Name	Pin	Signal Name
1	+3.3V	2	+3.3V
3	Ground	4	+5V
5	Ground	6	+5V
7	Ground	8	PWR OK
9	5VSB	10	+12V
11	+12V	12	+3.3V
13	+3.3V	14	-12V
15	Ground	16	PS-ON#
17	Ground	18	Ground
19	Ground	20	Res
21	+5V	22	+5V
23	+5V	24	Ground

PD_PWR1

Pin	Signal Name	Pin	Signal Name
1	+12v	2	+12v
3	+12v	4	Ground
5	Ground	6	Ground

Important

- *Make sure that all the power cables are securely connected to a proper ATX power supply to ensure stable operation of the motherboard.*
- *To achieve USB PD 60W fast charging for JUSB6, the PD_PWR1 connector needs to be connected to the power supply unit.*

JUSB5~6: USB 3.2 Gen 2x2 Type-C Front Panel Connectors

These connectors allow you to connect USB 3.2 Gen 2x2 20Gbps Type-C connector on the front panel. The connector has a foolproof design. When you connect the cable, be sure to connect it with the corresponding orientation.

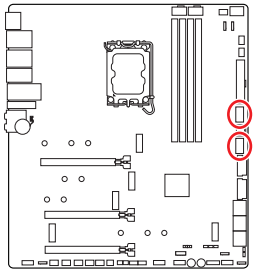

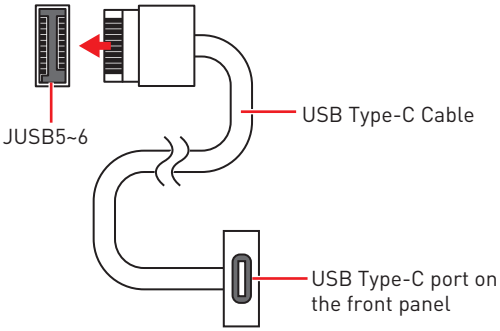

Important

- *To achieve USB PD 60W charging for JUSB6, PD_PWR1 connector needs to be connected to the power supply unit.*
- *JUSB6 doesn't support USB 2.0 device.*

JUSB3~4: USB 3.2 Gen 1 Connectors

These connectors allow you to connect USB 3.2 Gen 1 5Gbps ports on the front panel.

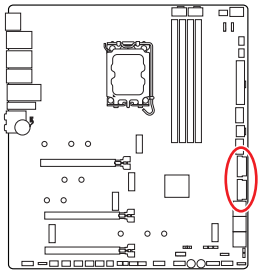

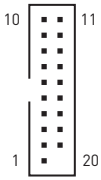

Pin	Signal Name	Pin	Signal Name
1	Power	2	USB3_RX_DN
3	USB3_RX_DP	4	Ground
5	USB3_TX_C_DN	6	USB3_TX_C_DP
7	Ground	8	USB2.0-
9	USB2.0+	10	Ground
11	USB2.0+	12	USB2.0-
13	Ground	14	USB3_TX_C_DP
15	USB3_TX_C_DN	16	Ground
17	USB3_RX_DP	18	USB3_RX_DN
19	Power	20	No Pin

Important

Note that the Power and Ground pins must be connected correctly to avoid possible damage.

JUSB1~2: USB 2.0 Connectors

These connectors allow you to connect USB 2.0 ports on the front panel.

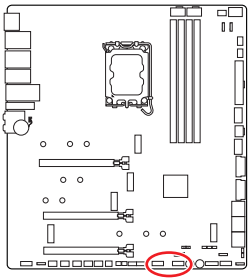

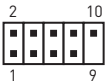

Pin	Signal Name	Pin	Signal Name
1	VCC	2	VCC
3	USB0-	4	USB1-
5	USB0+	6	USB1+
7	Ground	8	Ground
9	No Pin	10	NC

Important

- *Note that the VCC and Ground pins must be connected correctly to avoid possible damage.*
- *In order to recharge your iPad, iPhone and iPod through USB ports, please install MSI Center utility.*

JTPM1: TPM Module Connector

This connector is for TPM (Trusted Platform Module). Please refer to the TPM security platform manual for more details and usages.

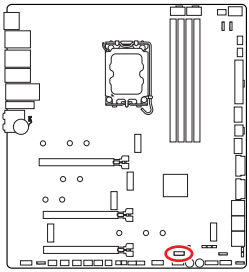

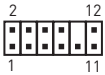

Pin	Signal Name	Pin	Signal Name
1	SPI Power	2	SPI Chip Select
3	Master In Slave Out (SPI Data)	4	Master Out Slave In (SPI Data)
5	Reserved	6	SPI Clock
7	Ground	8	SPI Reset
9	Reserved	10	No Pin
11	Reserved	12	Interrupt Request

T_SEN1~2: Thermal Sensor Connector

These connectors allow you to connect the thermistor cable and use it to monitor the temperature of the detection point.

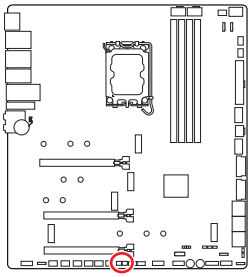

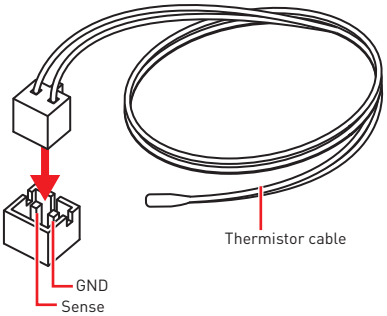

BIOS_SW1: Multi-BIOS Switch

This motherboard has two built-in BIOS ROMs. If one is crashed, you can shift to the other for booting by sliding the switch.

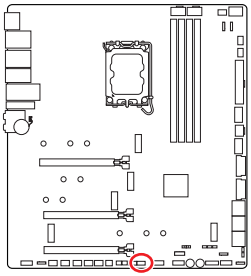

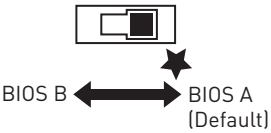

Important

- *Do not use the Multi-BIOS switch when system is booting up.*
- *You can also use the **MSI Center** or **Flash BIOS Button** to flash BIOS. Please refer to BIOS section for details.*

JOC_FS1: Safe Boot Jumper

This jumper is used for Safe Boot. Once enabled, the system will boot with default settings and lower PCIe (from CPU) mode.

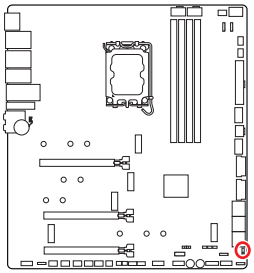

Normal

(default)

Boot with the saved BIOS settings.

Enabled

Apply the BIOS default settings and lower PCIe (from CPU) mode for Safe Boot

JOC_RT1: OC Retry Button Connector

This connector allows you to connect a button. When you press and hold the button, the system will keep retrying OC items until it boot up successfully.

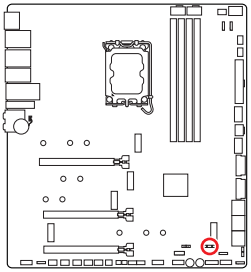

Normal
(default)

Retry OC

JSLOW1: Slow Mode Booting Jumper

This jumper is used for LN2 cooling solution, that provides the extreme overclocking conditions, to boot at a stable processor frequency and to prevent the system from crashing.

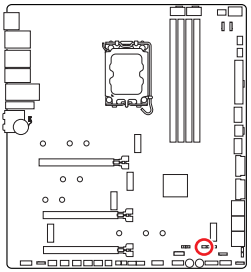

Normal

(Default)

Enabled

(Please enable this jumper during BIOS POST.)

JLN1~2: Low Temperature Booting Jumpers

These jumpers allow liquid nitrogen cooling system to boot at an extremely low temperature. Please try to enable the jumper to help the system boot successfully.

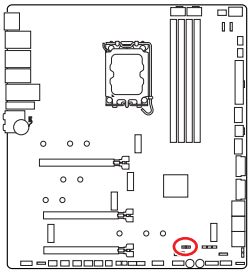

Normal

(Default)

Enabled

(Please enable this jumper during BIOS POST.)

Important

- *Please note that overclocking at an extremely low temperature carries the risk of system instability and may cause damages to the system.*
- *The overclocking results may vary depending on the CPU you use.*
- *Do not enable the jumper when the system is power off. Otherwise, the system will be unbootable.*

CPU_FAN1, PUMP_FAN1~2, SYS_FAN1~5: Fan Connectors

Fan connectors can be classified as PWM (Pulse Width Modulation) Mode or DC Mode. PWM Mode fan connectors provide constant 12V output and adjust fan speed with speed control signal. DC Mode fan connectors control fan speed by changing voltage. The auto mode fan connectors can automatically detect PWM and DC mode.

You can control fans in **BIOS> HARDWARE MONITOR** panel. It allows you to set DC or PWM to your fan type. Check the **Smart Fan Mode**, the fan speed will change according to the CPU or system temperature. Uncheck the **Smart Fan Mode**, the fan will spin at maximum speed.

Important

Make sure fans are working properly after switching the PWM/ DC mode.

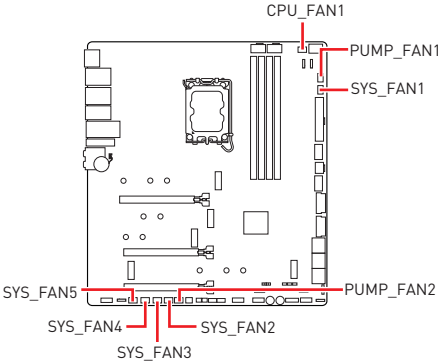

PWM Mode pin definition

Pin	Signal Name	Pin	Signal Name
1	Ground	2	+12V
3	Sense	4	Speed Control Signal

DC Mode pin definition

Pin	Signal Name	Pin	Signal Name
1	Ground	2	Voltage Control
3	Sense	4	NC

Fan connector specifications

Connector	Default fan mode	Max. current	Max. power
CPU_FAN1	Auto mode	3A	36W
PUMP_FAN1~2	Auto mode	3A	36W
SYS_FAN1~5	DC mode	2A	24W

JBAT1: Clear CMOS (Reset BIOS) Jumper

There is CMOS memory onboard that is external powered from a battery located on the motherboard to save system configuration data. If you want to clear the system configuration, set the jumpers to clear the CMOS memory.

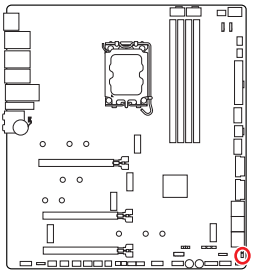

Keep Data
(default)

Clear CMOS/
Reset BIOS

Resetting BIOS to default values

1. Power off the computer and unplug the power cord.
2. Use a jumper cap to short **JBAT1** for about 5-10 seconds.
3. Remove the jumper cap from **JBAT1**.
4. Plug the power cord and Power on the computer.

BAT1: CMOS Battery

If the CMOS battery is out of charge, the time in the BIOS will be reset and the data of system configuration will be lost. In this case, you need to replace the CMOS battery.

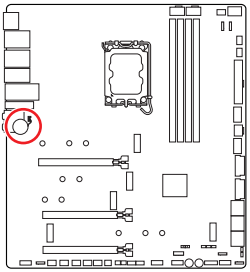

Replacing CMOS battery

1. Unplug the battery wire from the BAT1 connector and remove the battery.
2. Connect the new CR2032 battery with wire to the BAT1 connector.

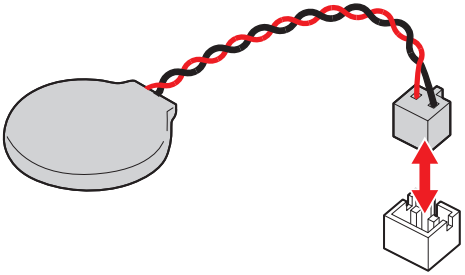

WARNING

KEEP OUT OF REACH OF CHILDREN

- *Swallowing can lead to chemical burns, perforation of soft tissue, can death.*
- *Severe burns can occur within 2 hours of ingestion.*
- *If you think batteries might have been swallowed or placed inside any part of the body, seek immediate medical attention.*

V-Check Points Lite

These voltage checkpoints are used to measure the current system voltages. A multimeter (not included) will be required to check voltages. To measure voltage, place test leads on the GND (screw mounting hole) and a specific V-Check Point. Please refer to the manual of your multimeter for more information.

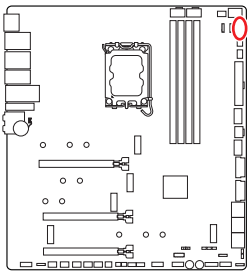

- VCC
- GND
- VCCIN
- CPU VDD2

JRGB1: RGB LED Connector

The JRGB connector allows you to connect the 5050 RGB LED strips 12V.

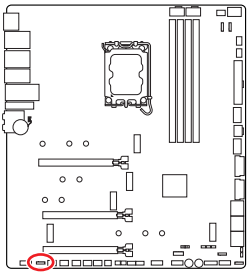

Pin	Signal Name	Pin	Signal Name
1	+12V	2	G
3	R	4	B

RGB LED Strip Connection

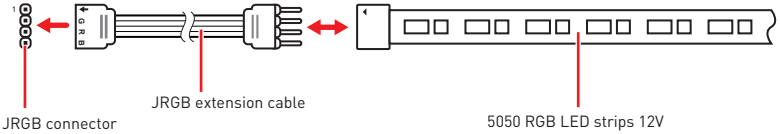

RGB LED Fan Connection

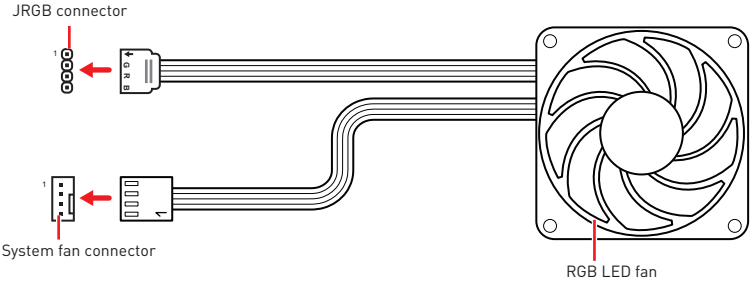

Important

- *The JRGB connector supports up to 2 meters continuous 5050 RGB LED strips (12V/G/R/B) with the maximum power rating of 3A (12V).*
- *Always turn off the power supply and unplug the power cord from the power outlet before installing or removing the RGB LED strip.*
- *Please use MSI's software to control the extended LED strip.*

JARGB_V2_1~3: A-RAINBOW V2 (ARGB Gen2) LED Connectors

The JARGB_V2 connectors allow you to connect the ARGB Gen2 and the ARGB-based LED strips. The JARGB_V2 connector supports up to 240 individually addressable RGB LEDs with maximum power rating of 3A (5V).

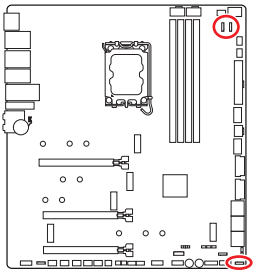

Pin	Signal Name	Pin	Signal Name
1	+5V	2	Data
3	No Pin	4	Ground

Addressable RGB LED Strip Connection

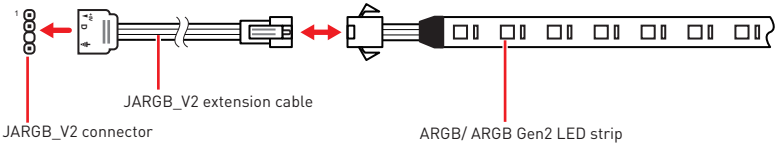

Addressable RGB LED Fan Connection

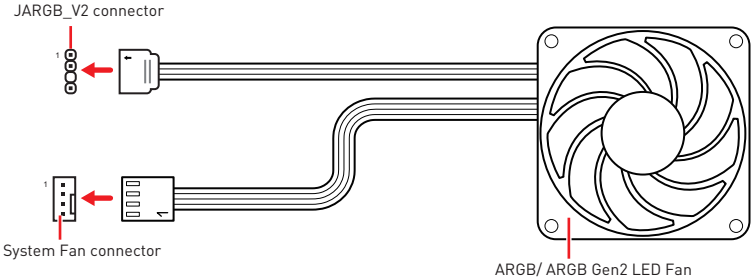

CAUTION

Do not connect the wrong type of LED strips. The JRGB connector and the JARGB_V2 connector provide different voltages, and connecting the ARGB 5V LED strip to the JRGB connector will result in damage to the LED strip.

Important

- *If you connect ARGB Gen1 and ARGB Gen2 LED strips into the same connector, it may cause issues. Please do not mix ARGB Gen1 and ARGB Gen2 LED strips together.*
- *It is recommended that you install LED strips with the same specification to achieve the best effects.*
- *Always turn off the power supply and unplug the power cord from the power outlet before installing or removing the addressable RGB LED strip.*
- *Please use MSI's software to control the extended LED strip.*

Onboard LEDs

EZ Debug LED

These LEDs indicate the debug status of the motherboard.

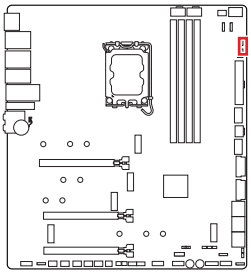

- **CPU** - indicates CPU is not detected or fail.
- **DRAM** - indicates DRAM is not detected or fail.
- **VGA** - indicates GPU is not detected or fail.
- **BOOT** - indicates the booting device is not detected or fail.

LED_SW1: EZ LED Control

This switch is used to switch on/ off all the LEDs of motherboard.

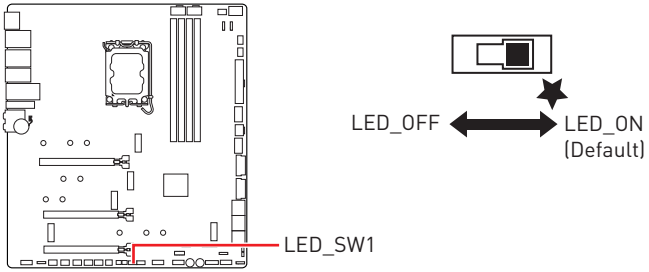

Debug Code LED

The Debug Code LED displays progress and error codes during and after POST. Refer to the Debug Code LED table for details.

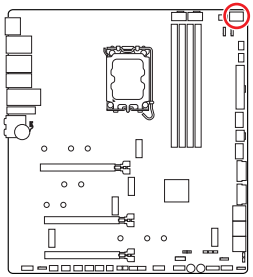

Hexadecimal Character Table

Hexadecimal	0	1	2	3	4	5	6	7
LED display	0	1	2	3	4	5	6	7
Hexadecimal	8	9	A	B	C	D	E	F
LED display	8	9	A	b	C	d	E	F

Boot Phases

Security (SEC) – initial low-level initialization

Pre-EFI Initialization (PEI) – memory initialization

Driver Execution Environment (DXE) – main hardware initialization

Boot Device Selection (BDS) – system setup, pre-OS user interface & selecting a bootable device (CD/DVD, HDD, USB, Network, Shell, ...)

Debug Code LED Table

SEC Progress Codes

01	Power on. Reset type detection (soft/hard)
02	AP initialization before microcode loading
03	System Agent initialization before microcode loading
04	PCH initialization before microcode loading
06	Microcode loading
07	AP initialization after microcode loading
08	System Agent initialization after microcode loading
09	PCH initialization after microcode loading
0B	Cache initialization

SEC Error Codes

0C - 0D	Reserved for future AMI SEC error codes
0E	Microcode not found
0F	Microcode not loaded

PEI Progress Codes

10	PEI Core is started
11	Pre-memory CPU initialization is started
12 - 14	Pre-memory CPU initialization (CPU module specific)
15	Pre-memory System Agent initialization is started
16 - 18	Pre-Memory System Agent initialization (System Agent module specific)
19	Pre-memory PCH initialization is started
1A - 1C	Pre-memory PCH initialization (PCH module specific)
2B	Memory initialization. Serial Presence Detect (SPD) data reading
2C	Memory initialization. Memory presence detection
2D	Memory initialization. Programming memory timing information
2E	Memory initialization. Configuring memory
2F	Memory initialization (other)
31	Memory Installed
32	CPU post-memory initialization is started
33	CPU post-memory initialization. Cache initialization
34	CPU post-memory initialization. Application Processor(s) (AP) initialization
35	CPU post-memory initialization. Boot Strap Processor (BSP) selection
36	CPU post-memory initialization. System Management Mode (SMM) initialization
37	Post-Memory System Agent initialization is started
38 - 3A	Post-Memory System Agent initialization (System Agent module specific)
3B	Post-Memory PCH initialization is started

3C - 3E	Post-Memory PCH initialization (PCH module specific)
4F	DXE IPL is started

PEI Error Codes

50	Memory initialization error. Invalid memory type or incompatible memory speed
51	Memory initialization error. SPD reading has failed
52	Memory initialization error. Invalid memory size or memory modules do not match
53	Memory initialization error. No usable memory detected
54	Unspecified memory initialization error
55	Memory not installed
56	Invalid CPU type or Speed
57	CPU mismatch
58	CPU self test failed or possible CPU cache error
59	CPU micro-code is not found or micro-code update is failed
5A	Internal CPU error
5B	Reset PPI is not available
5C - 5F	Reserved for future AMI error codes

DXE Progress Codes

60	DXE Core is started
61	NVRAM initialization
62	Installation of the PCH Runtime Services
63	CPU DXE initialization is started
64 - 67	CPU DXE initialization (CPU module specific)
68	PCI host bridge initialization
69	System Agent DXE initialization is started
6A	System Agent DXE SMM initialization is started

6B - 6F	System Agent DXE initialization (System Agent module specific)
70	PCH DXE initialization is started
71	PCH DXE SMM initialization is started
72	PCH devices initialization
73 - 77	PCH DXE Initialization (PCH module specific)
78	ACPI module initialization
79	CSM initialization
7A - 7F	Reserved for future AMI DXE codes
90	Boot Device Selection (BDS) phase is started
91	Driver connecting is started
92	PCI Bus initialization is started
93	PCI Bus Hot Plug Controller Initialization
94	PCI Bus Enumeration 32
95	PCI Bus Request Resources
96	PCI Bus Assign Resources
97	Console Output devices connect
98	Console input devices connect
99	Super IO Initialization
9A	USB initialization is started
9B	USB Reset
9C	USB Detect
9D	USB Enable
9E -9F	Reserved for future AMI codes
A0	IDE initialization is started
A1	IDE Reset
A2	IDE Detect
A3	IDE Enable

A4	SCSI initialization is started
A5	SCSI Reset
A6	SCSI Detect
A7	SCSI Enable
A8	Setup Verifying Password
A9	Start of Setup
AB	Setup Input Wait
AD	Ready To Boot event
AE	Legacy Boot event
AF	Exit Boot Services event
B0	Runtime Set Virtual Address MAP Begin
B1	Runtime Set Virtual Address MAP End
B2	Legacy Option ROM Initialization
B3	System Reset
B4	USB hot plug
B5	PCI bus hot plug
B6	Clean-up of NVRAM
B7	Configuration Reset (reset of NVRAM settings)
B8 - BF	Reserved for future AMI codes

DXE Error Codes

D0	CPU initialization error
D1	System Agent initialization error
D2	PCH initialization error
D3	Some of the Architectural Protocols are not available
D4	PCI resource allocation error. Out of Resources
D5	No Space for Legacy Option ROM
D6	No Console Output Devices are found

D7	No Console Input Devices are found
D8	Invalid password
D9	Error loading Boot Option (LoadImage returned error)
DA	Boot Option is failed (StartImage returned error)
DB	Flash update is failed
DC	Reset protocol is not available

S3 Resume Progress Codes

E0	S3 Resume is stared (S3 Resume PPI is called by the DXE IPL)
E1	S3 Boot Script execution
E2	Video repost
E3	OS S3 wake vector call
E4 - E7	Reserved for future AMI progress codes

S3 Resume Error Codes

E8	S3 Resume Failed
E9	S3 Resume PPI not Found
EA	S3 Resume Boot Script Error
EB	S3 OS Wake Error
EC - EF	Reserved for future AMI error codes

Recovery Progress Codes

F0	Recovery condition triggered by firmware (Auto recovery)
F1	Recovery condition triggered by user (Forced recovery)
F2	Recovery process started
F3	Recovery firmware image is found
F4	Recovery firmware image is loaded
F5 - F7	Reserved for future AMI progress codes

Recovery Error Codes

F8	Recovery PPI is not available
F9	Recovery capsule is not found
FA	Invalid recovery capsule
FB - FF	Reserved for future AMI error codes

ACPI States Codes

The following codes appear after booting and the operating system into ACPI modes.

01	System is entering S1 sleep state
02	System is entering S2 sleep state
03	System is entering S3 sleep state
04	System is entering S4 sleep state
05	System is entering S5 sleep state
10	System is waking up from the S1 sleep state
20	System is waking up from the S2 sleep state
30	System is waking up from the S3 sleep state
40	System is waking up from the S4 sleep state
AC	System has transitioned into ACPI mode. Interrupt controller is in PIC mode.
AA	System has transitioned into ACPI mode. Interrupt controller is in APIC mode.

CPU Temperature

00 - 99	Displays current CPU temperature after the system has fully booted into the OS.

Installing OS, Drivers & MSI Center

Please download and update the latest utilities and drivers at www.msi.com

Installing Windows 10/ Windows 11

1. Power on the computer.
2. Insert the Windows 10/ Windows 11 installation disc/USB into your computer.
3. Press the **Restart** button on the computer case.
4. Press **F11** key during the computer POST (Power-On Self Test) to get into Boot Menu.
5. Select the Windows 10/ Windows 11 installation disc/USB from the Boot Menu.
6. Press any key if screen shows **Press any key to boot from CD or DVD...** message. If not, please skip this step.
7. Follow the instructions on the screen to install Windows 10/ Windows 11.

Installing Drivers with MSI Driver Utility Installer

Important

- *Some new network chips have not been natively supported by Windows 10/ Windows 11. It is recommended that the **LAN driver** be installed before installing drivers with MSI Driver Utility Installer. Please refer to www.msi.com to install the LAN driver for your motherboard.*
- *The MSI Driver Utility Installer will only pop up once. If you cancel or close it during the process, please refer to the Live Update chapter of the MSI Center manual to install the drivers. You can also go to www.msi.com to search your motherboard and download the drivers.*
- *MSI Driver Utility Installer needs to be installed over the internet.*

1. Start up your computer in Windows 10/ Windows 11.
2. Select Start > Settings > Windows Update, and then select Check for updates.
3. MSI Driver Utility Installer will pop up automatically.

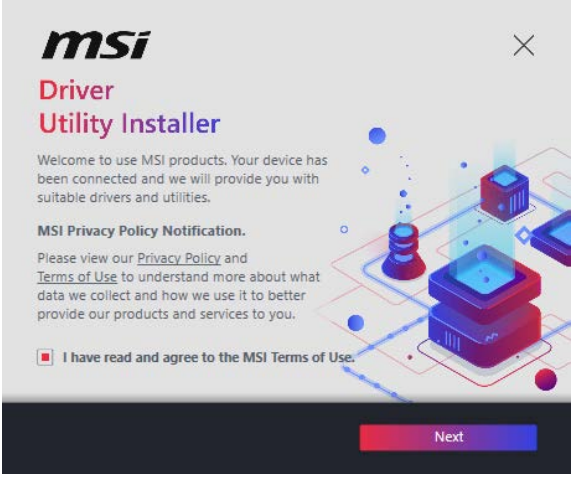

4. Select the **I have read and agree to the MSI Terms of Use** check box, and then click **Next**.

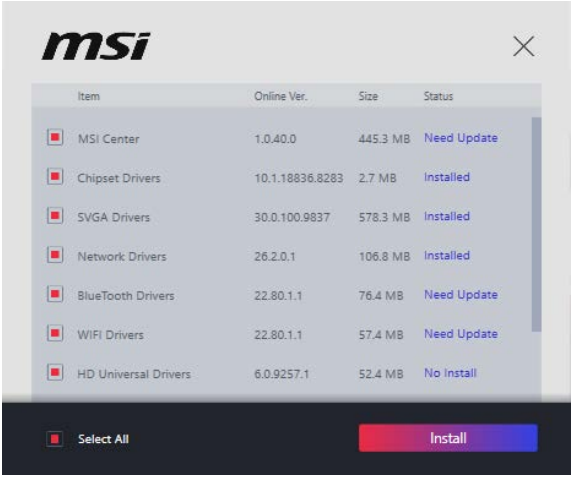

5. Check the **Select All** checkbox in the lower-left corner and click **Install** to install MSI Center and drivers. The installation progress will be shown at the bottom.

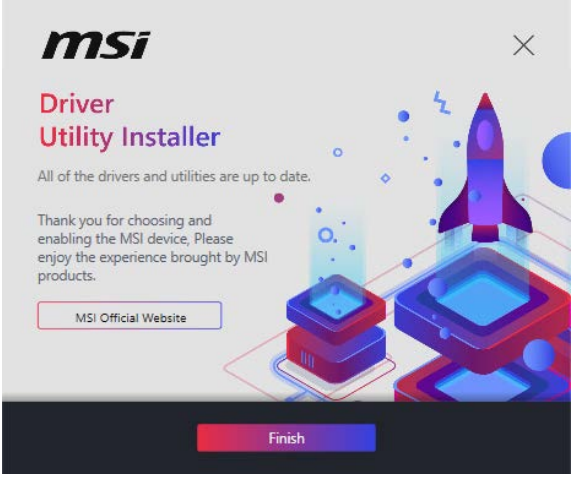

6. Once the progress has completed, click **Finish**.

Installing Drivers with MSI USB Drive

1. Start up your computer in Windows 10/ Windows 11.
2. Insert MSI USB Drive into the USB port.
3. You can see a **Disc Image file** which contains drivers and utilities in the USB drive. Double-click the file to open it.
4. Execute an application file named **DVDSetup**.
5. The installer will find and list all necessary drivers in the **Drivers/Software** tab.
6. Click the **Install** button in the lower-right corner of the window.
7. The drivers installation will then be in progress, after it has finished it will prompt you to restart.
8. Click **OK** button to finish.
9. Restart your computer.

MSI Center

MSI Center is an application that helps you easily optimize game settings and smoothly use content creation softwares. It also allows you to control and synchronize LED light effects on PCs and other MSI products. With MSI Center, you can customize ideal modes, monitor system performance, and adjust fan speed.

MSI Center User Guide

If you would like to know more information about MSI Center, please refer to

http://download.msi.com/manual/mb/MSICENTER.pdf

or scan the QR code to access.

Important

Functions may vary depending on the product you have.

UEFI BIOS

MSI UEFI BIOS is compatible with UEFI (Unified Extensible Firmware Interface) architecture. UEFI has many new functions and advantages that traditional BIOS cannot achieve, and it will completely replace BIOS in the future. The MSI UEFI BIOS uses UEFI as the default boot mode to take full advantage of the new chipset's capabilities.

Important

The term BIOS in this user guide refers to UEFI BIOS unless otherwise noted.

UEFI advantages

- Fast booting - UEFI can directly boot the operating system and save the BIOS self-test process. And also eliminates the time to switch to CSM mode during POST.
- Supports for hard drive partitions larger than 2 TB.
- Supports more than 4 primary partitions with a GUID Partition Table (GPT).
- Supports unlimited number of partitions.
- Supports full capabilities of new devices - new devices may not provide backward compatibility.
- Supports secure startup - UEFI can check the validity of the operating system to ensure that no malware tampers with the startup process.

Incompatible UEFI cases

- **32-bit Windows operating system** - this motherboard supports only Windows 10/ Windows 11 64-bit operating system.
- **Older graphics card** - the system will detect your graphics card. If you use older graphics cards, it may display a warning message **There is no GOP (Graphics Output protocol) support detected in this graphics card**.

Important

We recommend that you replace it with a graphics card supporting GOP/UEFI or use CPU with integrated graphics for having normal function.

How to check the BIOS mode?

1. Power on your computer.
2. Press **Delete** key, when the **Press DEL key to enter Setup Menu, F11 to enter Boot Menu** message appears on the screen during the boot process.
3. After entering the BIOS, you can check the **BIOS Mode** at the top of the screen.

BIOS Mode: **UEFI**

BIOS Setup

The default settings offer the optimal performance for system stability in normal conditions. You should **always keep the default settings** to avoid possible system damage or failure booting unless you are familiar with BIOS.

Important

- *BIOS items are continuously update for better system performance. Therefore, the description may be slightly different from the latest BIOS and should be for reference only. You could also refer to the **HELP** information panel for BIOS item description.*
- *The BIOS screens, options and settings will vary depending on your system.*

Entering BIOS Setup

Press **Delete** key, when the **Press DEL key to enter Setup Menu, F11 to enter Boot Menu** message appears on the screen during the boot process.

Function key

F1:	General Help list
F2:	Add/ Remove a favorite item
F3:	Enter Favorites menu
F4:	Enter CPU Specifications menu
F5:	Enter Memory-Z menu
F6:	Load optimized defaults
F7:	Switch between Advanced mode and EZ mode
F8:	Load Overclocking Profile
F9:	Save Overclocking Profile
F10:	Save Change and Reset*
F12:	Take a screenshot and save it to USB flash drive (FAT/ FAT32 format only).
Ctrl+F:	Enter Search page

* When you press F10, a confirmation window appears and it provides the modification information. Select between Yes or No to confirm your choice.

BIOS User Guide

If you'd like to know more instructions on setting up the BIOS, please refer to https://download.msi.com/archive/mnu_exe/mb/Intel700BIOS.pdf

or scan the QR code to access.

Important

Functions may vary depending on the product you have.

Resetting BIOS

You might need to restore the default BIOS setting to solve certain problems. There are several ways to reset BIOS:

- Go to BIOS and press **F6** to load optimized defaults.
- Short the **Clear CMOS** jumper on the motherboard.
- Press the **Clear CMOS** button on the rear I/O panel.

Important

*Be sure the computer is off before clearing CMOS data. Please refer to the **Clear CMOS** jumper/ button section for resetting BIOS.*

Updating BIOS

Updating BIOS with M-FLASH

Before updating:

Please download the latest BIOS file that matches your motherboard model from MSI website. And then save the BIOS file into the USB flash drive.

Updating BIOS:

1. Switch to the target BIOS ROM by Multi-BIOS switch. Please skip this step if your motherboard doesn't has this switch.
2. Insert the USB flash drive that contains the update file into the USB port.
3. Please refer the following methods to enter flash mode.
   - Reboot and press **Ctrl + F5** key during POST and click on Yes to reboot the system.

   - Reboot and press **Del** key during POST to enter BIOS. Click the **M-FLASH** button and click on Yes to reboot the system.

4. Select a BIOS file to perform the BIOS update process.
5. When prompted click on **Yes** to start recovering BIOS.
6. After the flashing process is 100% completed, the system will reboot automatically.

Updating the BIOS with MSI Center

Before updating:

- Make sure the LAN driver is already installed and the internet connection is set properly.
- Please close all other application software before updating the BIOS.

To update BIOS:

1. Install and launch MSI Center and go to **Support** page.
2. Select **Live Update** and click on **Advance** button.
3. Select the BIOS file and click on **Install** button.
4. The installation reminder will appear, then click the Install button on it.
5. The system will automatically restart to update BIOS.
6. After the flashing process is 100% completed, the system will restart automatically.

Updating BIOS with Flash BIOS Button

1. Please download the latest BIOS file that matches your motherboard model from the MSI® website.
2. Rename the BIOS file to MSI.ROM, and save it to the root of the USB storage device.
3. Connect the power supply to **CPU_PWR1** and **ATX_PWR1**. (No need to install CPU and memory.)
4. Plug the USB storage device that contains the MSI.ROM file into the **Flash BIOS Port** on the rear I/O panel.
5. Press the **Flash BIOS Button** to flash BIOS, and the LED starts flashing.
6. The LED will be turned off when the process is completed.

Block Diagram

MEG Z790 ACE

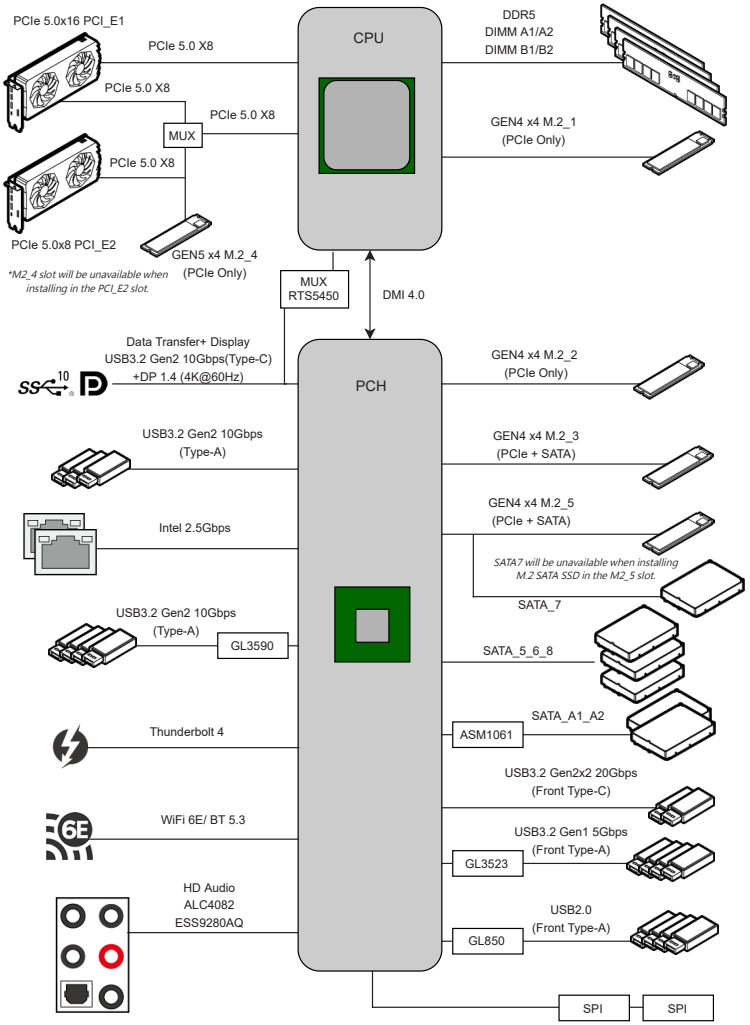

Regulatory Notices

FCC-B Radio Frequency Interference Statement

This equipment has been tested and found to comply with the limits for a Class B digital device, pursuant to part 15 of the FCC rules. These limits are designed to provide reasonable protection against harmful interference in a residential installation. This equipment generates, uses and radiates radio frequency energy, and, if not installed and used in accordance with the instructions, may cause harmful interference to radio communications. However, there is no guarantee that interference will not occur in a particular installation. If this equipment does cause harmful interference to radio or television reception, which can be determined by turning the equipment off and on, the user is encouraged to try to correct the interference by one or more of the following measures:

- Reorient or relocate the receiving antenna.
- Increase the separation between the equipment and receiver.
- Connect the equipment into an outlet on a circuit different from that to which the receiver is connected.

NOTE

- The changes or modifications not expressly approved by the party responsible for compliance could void the user's authority to operate the equipment.
- Shield interface cables and AC power cord, if any, must be used in order to comply with the emission limits.

FCC Conditions

This device complies with part 15 of the FCC Rules. Operation is subject to the following two conditions:

- This device may not cause harmful interference.
- This device must accept any interference received, including interference that may cause undesired operation.

MSI Computer Corp.

901 Canada Court, City of Industry, CA 91748, USA

(626)913-0828

www.msi.com

CE Conformity

Products bearing the CE marking comply with one or more of the following EU Directives as may be applicable:

- RED 2014/53/EU
- Low Voltage Directive 2014/35/EU
- EMC Directive 2014/30/EU
- RoHS Directive 2011/65/EU
- ErP Directive 2009/125/EC

Compliance with these directives is assessed using applicable European Harmonized Standards.

The point of contact for regulatory matters is MSI-Europe: Eindhoven 5706 5692 ER Son.

Products with Radio Functionality (EMF)

This product incorporates a radio transmitting and receiving device. For computers in normal use, a separation distance of 20 cm ensures that radio frequency exposure levels comply with EU requirements. Products designed to be operated at closer proximities, such as tablet computers, comply with applicable EU requirements in typical operating positions. Products can be operated without maintaining a separation distance unless otherwise indicated in instructions specific to the product.

Restrictions for Products with Radio Functionality

CAUTION: IEEE 802.11x wireless LAN with 5.15~5.35 GHz frequency band is restricted for indoor use only in all European Union member states, EFTA (Iceland, Norway, Liechtenstein), and most other European countries (e.g., Switzerland, Turkey, Republic of Serbia). Using this WLAN application outdoors might lead to interference issues with existing radio services.

Radio frequency bands and maximum power levels

- Features: Wi-Fi 6E, BT
- Frequency Range: 2.4 GHz: 2400~2485MHz; 5 GHz: 5150~5350MHz, 5470~5725MHz, 5725~5850MHz; 6 GHz: 5955~6415MHz
- Max Power Level: 2.4 GHz: 20dBm; 5 GHz: 23dBm; 6 GHz: 23dBm

Wireless Radio Use

This device is restricted to indoor use when operating in the 2.4GHz, 5GHz, 6GHz frequency band.

Cet appareil doit être utilisé à l'intérieur.

당해 무선설비는 운용중 전파혼신 가능성이 있음.

この製品は、周波数帯域 2.4GHz, 5GHz, 6GHz で動作しているときは、屋内においてのみ使用可能です。

NCC無線設備警告聲明

工作頻率2.4GHz, 5GHz, 6GHz該頻段限於室內使用。

經型式認證合格之低功率射頻電機，非經許可，公司、商號或使用者均不得擅自變更頻率、加大功率或變更原設計之特性及功能。

低功率射頻電機之使用不得影響飛航安全及干擾合法通信；經發現有干擾現象時，應立即停用，並改善至無干擾時方得繼續使用。前項合法通信，指依電信法規定作業之無線電通信。低功率射頻電機須忍受合法通信或工業、科學及醫療用電波輻射性電機設備之干擾。

Compliance Statement of Innovation, Science and Economic Development Canada (ISED)

This device complies with with Innovation, Science and Economic Development Canada's licence-exempt RSS(s). Operation is subject to the following two conditions: (1) this device may not cause interference, and (2) this device must accept any interference, including interference that may cause undesired operation of the device.

Operation in the band 5150-5250 MHz is only for indoor use to reduce the potential for harmful interference to co-channel mobile satellite systems.

CAN ICES-003(B)/NMB-003(B)

Australia and New Zealand notice

This equipment incorporates a radio transmitting and receiving device. In normal use, a separation distance of 20 cm ensures that radio frequency exposure levels comply with the Australian and New Zealand Standards.

クラスB情報技術装置

この装置は、クラスB情報技術装置です。この装置は、家庭環境で使用することを目的としていますが、この装置がラジオやテレビジョン受信機に近接して使用されると、受信障害を引き起こすことがあります。取扱説明書に従って正しい取り扱いをして下さい。

VCCI-B

KC인증서

R-R-MSI-10-7D86

상호: (주)엠에스아이코리아
제품명: 메인보드
모델명: 10-7D86
제조년월: 2022년
제조자 및 제조국가: MSI/중국

Battery Information

European Union:

Batteries, battery packs, and accumulators should not be disposed of as unsorted household waste. Please use the public collection system to return, recycle, or treat them in compliance with the local regulations.

BSMI:

廢電池請回收
For better environmental protection, waste batteries should be collected separately for recycling or special disposal.

California, USA:

The button cell battery may contain perchlorate material and requires special handling when recycled or disposed of in California.
For further information please visit:
http://www.dtsc.ca.gov/hazardouswaste/perchlorate/

CAUTION: There is a risk of explosion, if battery is incorrectly replaced. Replace only with the same or equivalent type recommended by the manufacturer.

Chemical Substances Information

In compliance with chemical substances regulations, such as the EU REACH Regulation (Regulation EC No. 1907/2006 of the European Parliament and the Council), MSI provides the information of chemical substances in products at:

https://csr.msi.com/global/index

Environmental Policy

- The product has been designed to enable proper reuse of parts and recycling and should not be thrown away at its end of life.
- Users should contact the local authorized point of collection for recycling and disposing of their end-of-life products.
- Visit the MSI website and locate a nearby distributor for further recycling information.
- Users may also reach us at gpcontdev@msi.com for information regarding proper Disposal, Take-back, Recycling, and Disassembly of MSI products.

WEEE (Waste Electrical and Electronic Equipment) Statement

ENGLISH

To protect the global environment and as an environmentalist, MSI must remind you that...

Under the European Union ("EU") Directive on Waste Electrical and Electronic Equipment, Directive 2002/96/EC, which takes effect on August 13, 2005, products of "electrical and electronic equipment" cannot be

discarded as municipal wastes anymore, and manufacturers of covered electronic equipment will be obligated to take back such products at the end of their useful life. MSI will comply with the product take back requirements at the end of life of MSI-branded products that are sold into the EU. You can return these products to local collection points.

DEUTSCH

Hinweis von MSI zur Erhaltung und Schutz unserer Umwelt

Gemäß der Richtlinie 2002/96/EG über Elektro- und Elektronik-Altgeräte dürfen Elektro- und Elektronik-Altgeräte nicht mehr als kommunale Abfälle entsorgt werden. MSI hat europaweit verschiedene Sammel- und Recyclingunternehmen beauftragt, die in die Europäische Union in Verkehr gebrachten Produkte, am Ende seines Lebenszyklus zurückzunehmen. Bitte entsorgen Sie dieses Produkt zum gegebenen Zeitpunkt ausschliesslich an einer lokalen Altgerätesammelstelle in Ihrer Nähe.

FRANÇAIS

En tant qu'écologiste et afin de protéger l'environnement, MSI tient à rappeler ceci...

Au sujet de la directive européenne (EU) relative aux déchets des équipement électriques et électroniques, directive 2002/96/EC, prenant effet le 13 août 2005, que les produits électriques et électroniques ne peuvent être déposés dans les décharges ou tout simplement mis à la poubelle. Les fabricants de ces équipements seront obligés de récupérer certains produits en fin de vie. MSI prendra en compte cette exigence relative au retour des produits en fin de vie au sein de la communauté européenne. Par conséquent vous pouvez retourner localement ces matériels dans les points de collecte.

РУССКИЙ

Компания MSI предпринимает активные действия по защите окружающей среды, поэтому напоминаем вам, что....

В соответствии с директивой Европейского Союза (ЕС) по предотвращению загрязнения окружающей среды использованным электрическим и электронным оборудованием (директива WEEE 2002/96/EC), вступающей в силу 13 августа 2005 года, изделия, относящиеся к электрическому и электронному оборудованию, не могут рассматриваться как бытовой мусор, поэтому производители вышеперечисленного электронного оборудования обязаны принимать его для переработки по окончании срока службы. MSI обязуется соблюдать требования по приему продукции, проданной под маркой MSI на территории ЕС, в переработку по окончании срока службы. Вы можете вернуть эти изделия в специализированные пункты приема.

ESPAÑOL

MSI como empresa comprometida con la protección del medio ambiente, recomienda:

Bajo la directiva 2002/96/EC de la Unión Europea en materia de desechos y/o equipos electrónicos, con fecha de rigor desde el 13 de agosto de 2005, los productos clasificados como "eléctricos y equipos electrónicos" no pueden ser depositados en los contenedores habituales de su municipio, los fabricantes de equipos electrónicos, están obligados a hacerse cargo de dichos productos al termino de su período de vida. MSI estará comprometido con los términos de recogida de sus productos vendidos en

la Unión Europea al final de su periodo de vida. Usted debe depositar estos productos en el punto limpio establecido por el ayuntamiento de su localidad o entregar a una empresa autorizada para la recogida de estos residuos.

NEDERLANDS

Om het milieu te beschermen, wil MSI u eraan herinneren dat....

De richtlijn van de Europese Unie (EU) met betrekking tot Vervuiling van Electrische en Electronische producten (2002/96/EC), die op 13 Augustus 2005 in zal gaan kunnen niet meer beschouwd worden als vervuiling. Fabrikanten van dit soort producten worden verplicht om producten retour te nemen aan het eind van hun levenscyclus. MSI zal overeenkomstig de richtlijn handelen voor de producten die de merknaam MSI dragen en verkocht zijn in de EU. Deze goederen kunnen geretourneerd worden op lokale inzamelingspunten.

SRPSKI

Da bi zaštitili prirodnu sredinu, i kao preduzeće koje vodi računa o okolini i prirodnoj sredini, MSI mora da vas podesti da...
Po Direktivi Evropske unije ("EU") o odbačenoj ekektronskoj i električnoj opremi, Direktiva 2002/96/EC, koja stupa na snagu od 13. Avgusta 2005, proizvodi koji spadaju pod "elektronsku i električnu opremu" ne mogu više biti odbačeni kao običan otpad i proizvođači ove opreme biće prinuđeni da uzmu natrag ove proizvode na kraju njihovog uobičajenog veka trajanja. MSI će poštovati zahtev o preuzimanju ovakvih proizvoda kojima je istekao vek trajanja, koji imaju MSI oznaku i koji su prodati u EU. Ove proizvode možete vratiti na lokalnim mestima za prikupljanje.

POLSKI

Aby chronić nasze środowisko naturalne oraz jako firma dbająca o ekologię, MSI przypomina, że...Zgodnie z Dyrektywą Unii Europejskiej ("UE") dotyczącą odpadów produktów elektrycznych i elektronicznych (Dyrektywa 2002/96/EC), która wchodzi w życie 13 sierpnia 2005, tzw. "produkty oraz wyposażenie elektryczne i elektroniczne " nie mogą być traktowane jako śmieci komunalne, tak więc producenci tych produktów będą zobowiązani do odbierania ich w momencie gdy produkt jest wycofywany z użycia. MSI wypełni wymagania UE, przyjmując produkty (sprzedawane na terenie Unii Europejskiej) wycofywane z użycia. Produkty MSI będzie można zwracać w wyznaczonych punktach zbiorczych.

TÜRKÇE

Çevreci özelliğiyle bilinen MSI dünyada çevreyi korumak için hatırlatır:
Avrupa Birliği (AB) Kararnamesi Elektrik ve Elektronik Malzeme Atığı, 2002/96/EC Kararnamesi altında 13 Ağustos 2005 tarihinden itibaren geçerli olmak üzere, elektrikli ve elektronik malzemeler diğer atıklar gibi çöpe atılamayacak ve bu elektonik cihazların üreticileri, cihazların kullanım süreleri bittikten sonra ürünleri geri toplamakla yükümlü olacaktır. Avrupa Birliği'ne satılan MSI markalı ürünlerin kullanım süreleri bittiğinde MSI ürünlerin geri alınması isteği ile işbirliği içerisinde olacaktır. Ürünlerinizi yerel toplama noktalarına bırakabilirsiniz.

ČESKY

Záleží nám na ochraně životního prostředí - společnost MSI upozorňuje...

Podle směrnice Evropské unie ("EU") o likvidaci elektrických a elektronických výrobků 2002/96/EC platné od 13. srpna 2005 je zakázáno likvidovat "elektrické a elektronické

výrobky" v běžném komunálním odpadu a výrobci elektronických výrobků, na které se tato směrnice vztahuje, budou povinni odebírat takové výrobky zpět po skončení jejich životnosti. Společnost MSI splní požadavky na odebírání výrobků značky MSI, prodávaných v zemích EU, po skončení jejich životnosti. Tyto výrobky můžete odevzdat v místních sběrnách.

MAGYAR

Annak érdekében, hogy környezetünket megvédjük, illetve környezetvédőként fellépve az MSI emlékezteti Önt, hogy ...

Az Európai Unió („EU") 2005. augusztus 13-án hatályba lépő, az elektromos és elektronikus berendezések hulladékairól szóló 2002/96/EK irányelve szerint az elektromos és elektronikus berendezések többé nem kezelhetőek lakossági hulladékként, és az ilyen elektronikus berendezések gyártói kötelessé válnak az ilyen termékek visszavételére azok hasznos élettartama végén. Az MSI betartja a termékvisszavétellel kapcsolatos követelményeket az MSI márkanév alatt az EU-n belül értékesített termékek esetében, azok élettartamának végén. Az ilyen termékeket a legközelebbi gyűjtőhelyre viheti.

ITALIANO

Per proteggere l'ambiente, MSI, da sempre amica della natura, ti ricorda che....

In base alla Direttiva dell'Unione Europea (EU) sullo Smaltimento dei Materiali Elettrici ed Elettronici, Direttiva 2002/96/EC in vigore dal 13 Agosto 2005, prodotti appartenenti alla categoria dei Materiali Elettrici ed Elettronici non possono più essere eliminati come rifiuti municipali: i produttori di detti materiali saranno obbligati a ritirare ogni prodotto alla fine del suo ciclo di vita. MSI si adeguerà a tale Direttiva ritirando tutti i prodotti marchiati MSI che sono stati venduti all'interno dell'Unione Europea alla fine del loro ciclo di vita. È possibile portare i prodotti nel più vicino punto di raccolta

日本JIS C 0950材質宣言

日本工業規格JIS C 0950により、2006年7月1日以降に販売される特定分野の電気および電子機器について、製造者による含有物質の表示が義務付けられます。

https://csr.msi.com/tw/Japan-JIS-C-0950-Material-Declarations

India RoHS

This product complies with the "India E-waste (Management and Handling) Rule 2011" and prohibits use of lead, mercury, hexavalent chromium, polybrominated biphenyls or polybrominated diphenyl ethers in concentrations exceeding 0.1 weight % and 0.01 weight % for cadmium, except for the exemptions set in Schedule 2 of the Rule.

Türkiye EEE yönetmeliği

Türkiye Cumhuriyeti: EEE Yönetmeliğine Uygundur

Україна обмеження на наявність небезпечних речовин

Обладнання відповідає вимогам Технічного регламенту щодо обмеження використання деяких небезпечних речовин в електричному та електронному обладнані, затвердженого постановою Кабінету Міністрів України від 3 грудня 2008 № 1057.

Việt Nam RoHS

Kể từ ngày 01/12/2012, tất cả các sản phẩm do công ty MSI sản xuất tuân thủ Thông tư số 30/2011/TT-BCT quy định tạm thời về giới hạn hàm lượng cho phép của một số hóa chất độc hại có trong các sản phẩm điện, điện tử"

MS-7D86主板产品中有害物质的名称及含量

部件名称	有害物质					
	铅 (Pb)	汞 (Hg)	镉 (Cd)	六价铬 (Cr(VI))	多溴联苯 (PBB)	多溴二苯醚 (PBDE)
印刷电路板组件*	╳	○	○	○	○	○
纽扣电池	○	○	○	○	○	○
外部信号连接头	╳	○	○	○	○	○
其他 (例: 线材等)	╳	○	○	○	○	○

本表格依据 SJ/T 11364 的规定编制。

○: 表示该有害物质在该部件所有均质材料中的含量均在 GB/T 26572 规定的限量要求以下。

╳: 表示该有害物质至少在该部件的某一均质材料中的含量超出 GB/T 26572 规定的限量要求，但所有部件都符合欧盟RoHS要求。

* 印刷电路板组件: 包括印刷电路板及其构成的零部件。

■ 上述有毒有害物质或元素清单会依型号之部件差异而有所增减。

■ 产品部件本体上如有环保使用期限标识，以本体标识为主。

限用物質含有情況標示聲明書

設備名稱：電腦主機板　　型號(型式)：MS-7D86

單元	限用物質及其化學符號					
	鉛 (Pb)	汞 (Hg)	鎘 (Cd)	六價鉻 (Cr^{+6})	多溴聯苯 (PBB)	多溴二苯醚 (PBDE)
電路板	○	○	○	○	○	○
電子元件	—	○	○	○	○	○
金屬機構件	—	○	○	○	○	○
塑膠機構件	○	○	○	○	○	○

備考1. "超出0.1 wt %" 及 "超出0.01 wt %" 係指限用物質之百分比含量超出百分比含量基準值。

備考2. "○" 係指該項限用物質之百分比含量未超出百分比含量基準值。

備考3. "—" 係指該項限用物質為排除項目。

Copyright and Trademarks Notice

Copyright © Micro-Star Int'l Co., Ltd. All rights reserved. The MSI logo used is a registered trademark of Micro-Star Int'l Co., Ltd. All other marks and names mentioned may be trademarks of their respective owners. No warranty as to accuracy or completeness is expressed or implied. MSI reserves the right to make changes to this document without prior notice.

Technical Support

If a problem arises with your system and no solution can be obtained from the user guide, please contact your place of purchase or local distributor. Alternatively, please try the following help resources for further guidance.

- Visit the MSI website for technical guide, BIOS updates, driver updates, and other information: http://www.msi.com
- Register your product at: http://register.msi.com

Revision History

- Version 1.0, 2022/10, First release.

FR LIVRET BAC DE TRI