Installation Guide Smart-UPS™ RT SRTGRK1 Tower to Rack-Mount Conversion

Safety Messages

Read these instructions carefully and look at the equipment to become familiar with the device before trying to install, operate, service or maintain it. The following special messages may appear throughout this bulletin or on the equipment to warn of potential hazards or to call attention to information that clarifies or simplifies a procedure.

The addition of this symbol to either a Danger or Warning product safety label indicates that an electrical hazard exists which will result in personal injury if the instructions are not followed.

This is the safety alert symbol. It is used to alert you to potential personal injury hazards. Obey all safety messages that follow this symbol to avoid possible injury or death.

⚠ DANGER

DANGER indicates a hazardous situation which, if not avoided, **will result in** death or serious injury.

⚠ WARNING

WARNING indicates a hazardous situation which, if not avoided, **could result in** death or serious injury.

⚠ CAUTION

CAUTION indicates a hazardous situation which, if not avoided, **could result in** minor or moderate injury.

NOTICE

NOTICE is used to address practices not related to physical injury.

Product Handling Guidelines

<18 kg
<40 lb

18-32 kg
40-70 lb

32-55 kg
70-120 lb

>55 kg
>120 lb

Package Contents

Inspect the contents upon receipt. Notify the carrier and dealer if the unit is damaged.

One Rail Kit with instructions and hardware for installing rails in a rack.

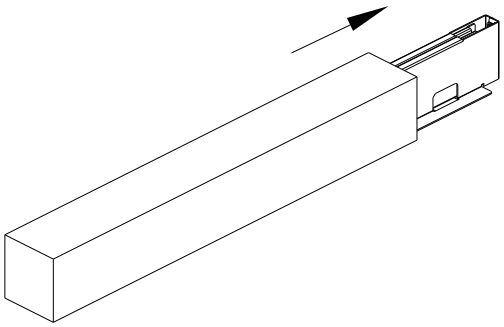

Installation manual

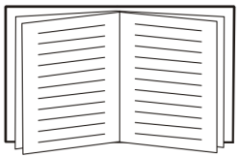

（x1）

Packing list

（x1）

M5x12 Phillips flat head screw for fixing the rail to the rack-mount

（x12）

SRTGRK1 is compatible with all the variants of the following models:

- SRTG5KXLI
- SRTG6KXLI
- SRTG8KXLI
- SRTG10KXLI
- SRTG192XLBP
- SRTG192XLBP1

Tower to Rack-Mount Conversion of UPS

⚠ CAUTION

DAMAGE TO EQUIPMENT OR PERSONNEL

- The equipment is heavy. Each SRTG192XLBP battery module weighs 14.5 kg (32.0 lb) and each SRTG192XLBP1 battery module weighs 25.2 kg (55.6 lb).
- Always practice safe lifting techniques adequate for the weight of the equipment.
- Remove the battery modules before installing the UPS.
- Use the battery module handle to carefully slide the battery module in or out of the unit.
- Do not use the battery module handle to lift or carry the battery module.
- Place the UPS on the table to remove the mounting base.
- Always install the UPS at the bottom of the rack.
- Always install the XLBP below the UPS in the rack.

Failure to follow these instructions can result in equipment damage and minor or moderate injury.

❶

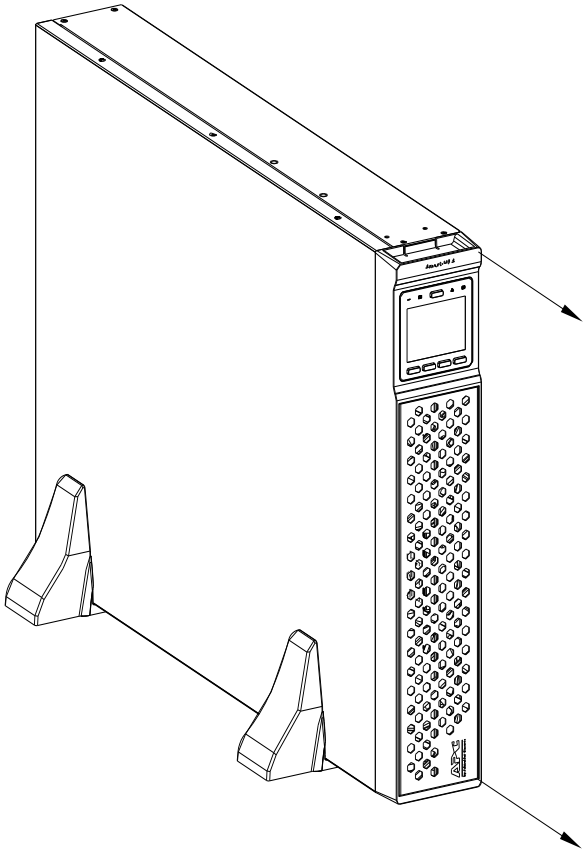

❷

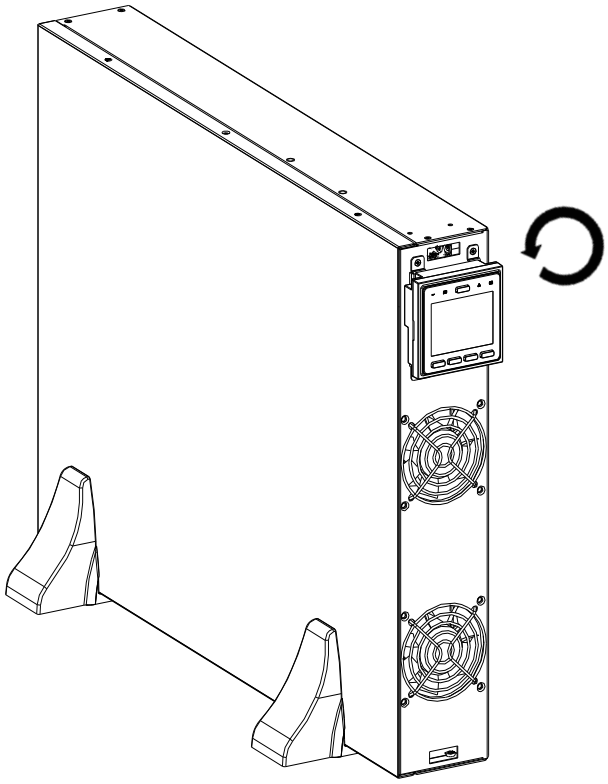

❸

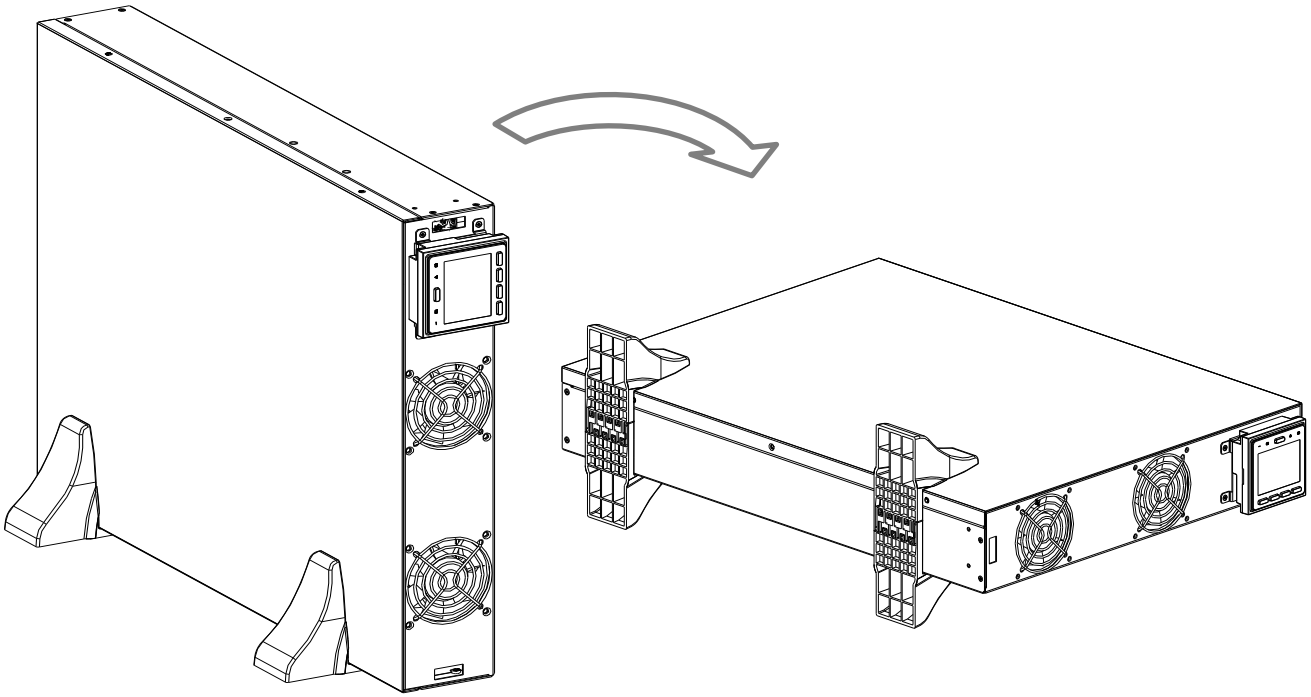

❹

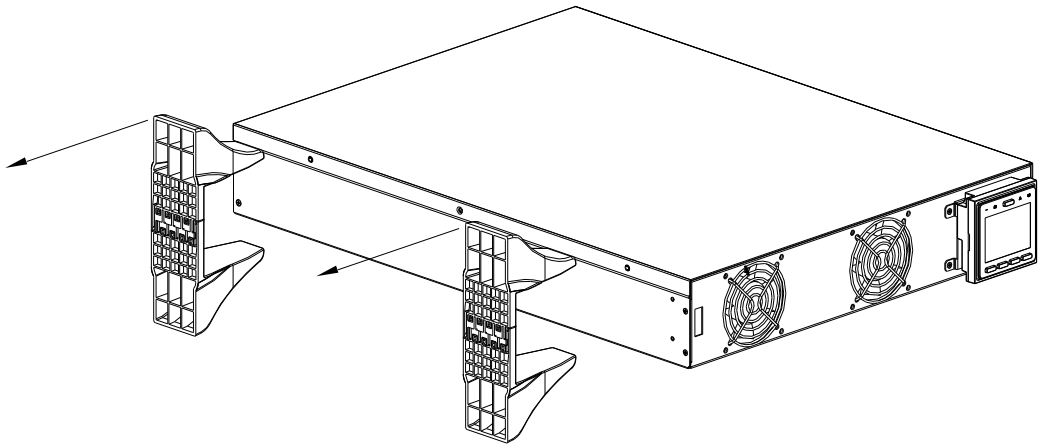

Install UPS in Rack

⚠ CAUTION

DAMAGE TO EQUIPMENT OR PERSONNEL

- The equipment is heavy. Always practice safe lifting techniques adequate for the weight of the equipment.
- Always use the recommended number of screws to secure brackets to the UPS.
- Always use the recommended number of screws to secure the UPS to the rack.
- Always install the UPS at the bottom of the rack.
- Always install the XLBP below the UPS in the rack.

Failure to follow these instructions can result in equipment damage and minor or moderate injury.

❶

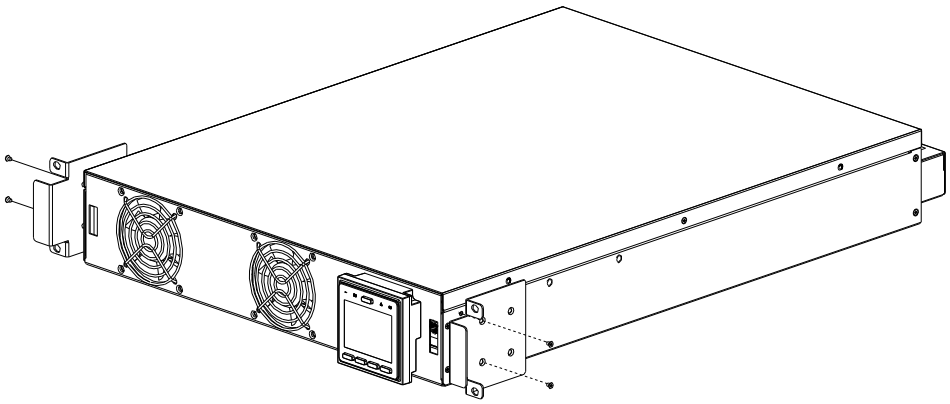

❷

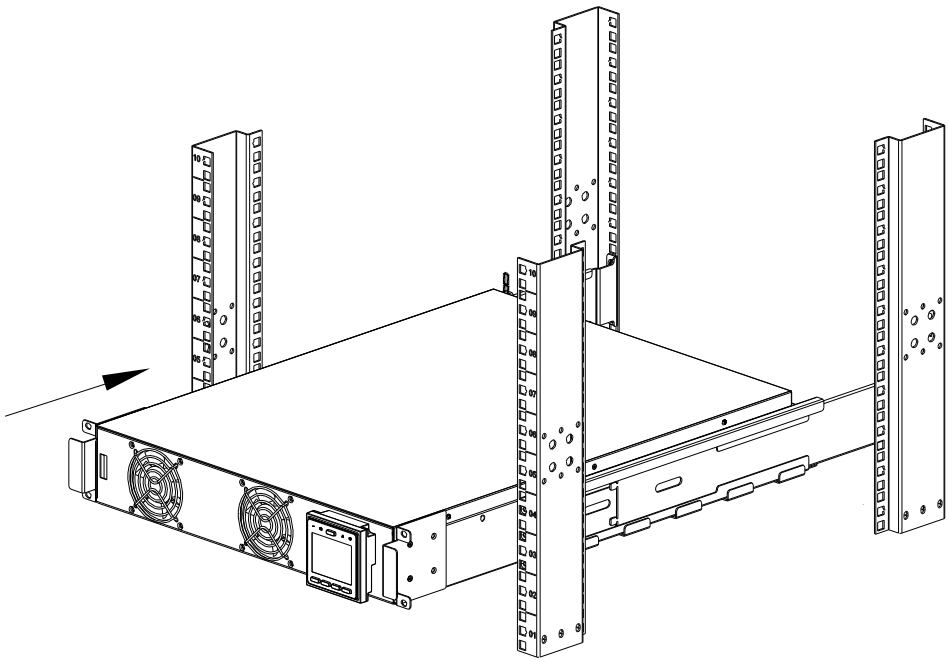

❸

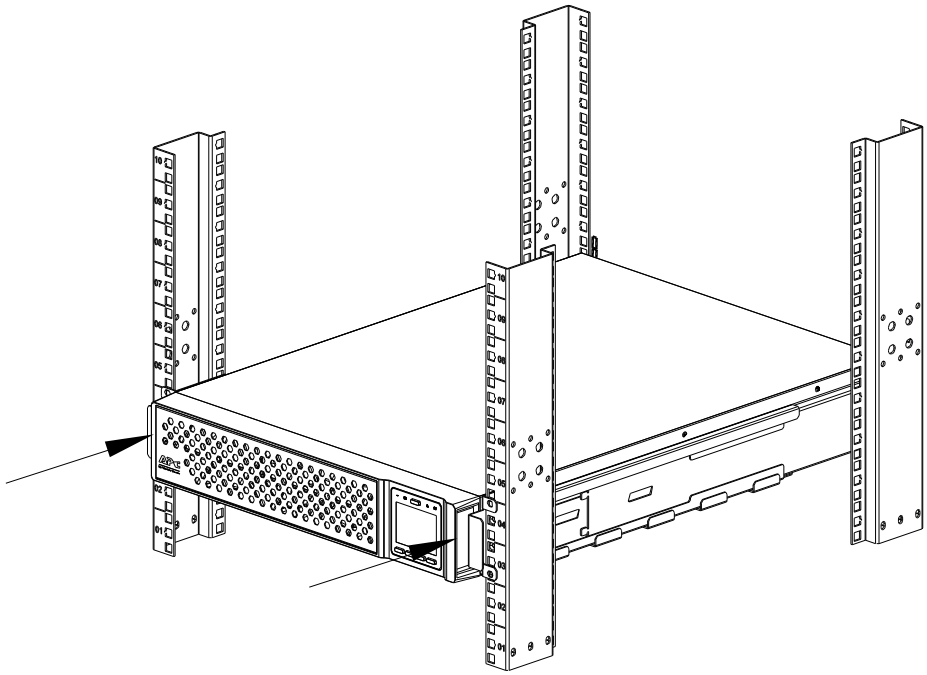

❹

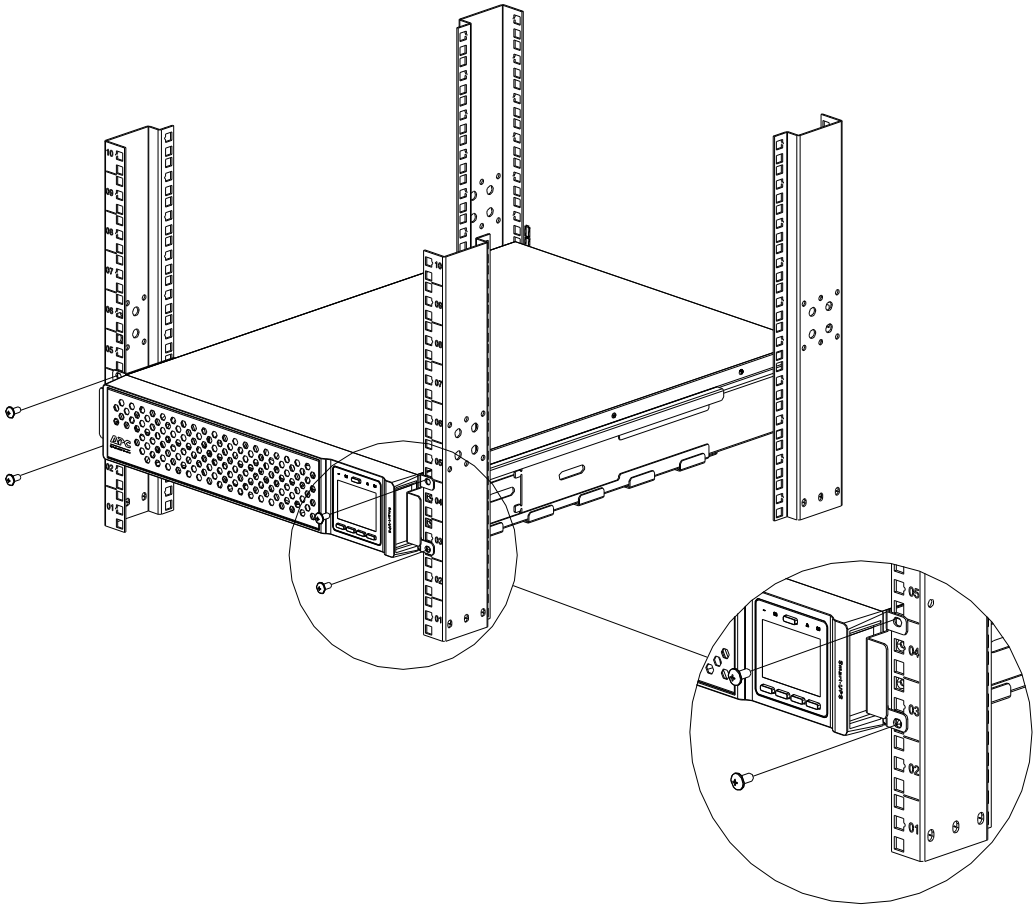

Tower to Rack-Mount Conversion of 4U UPS

❶

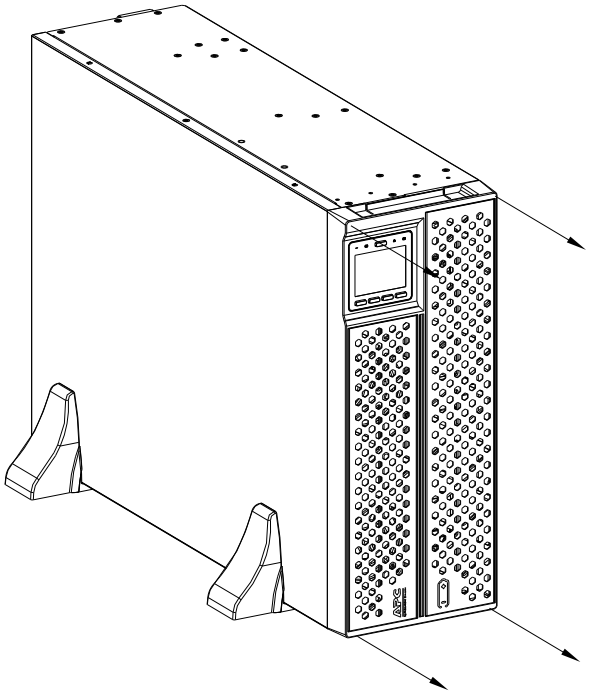

❷

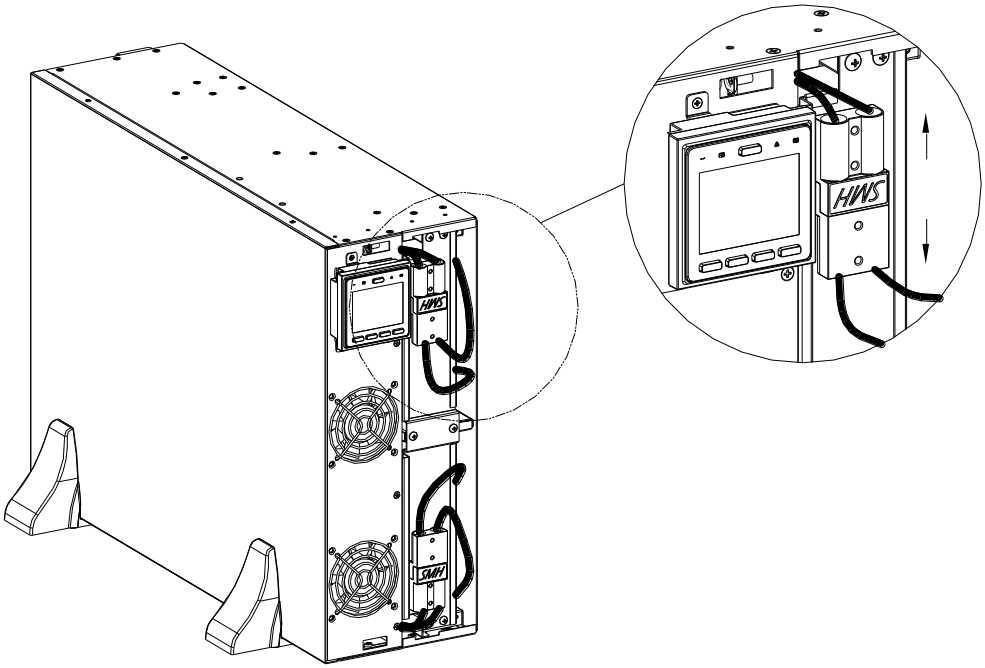

❸

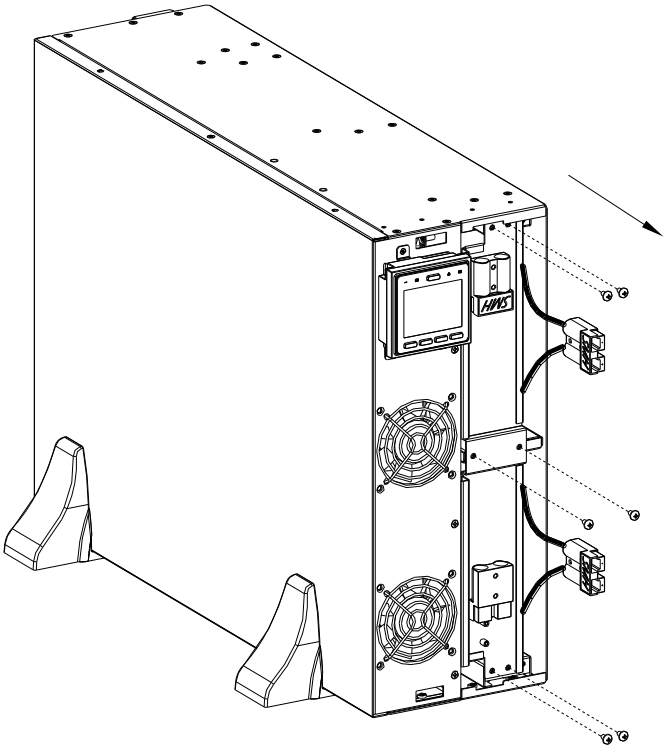

❹

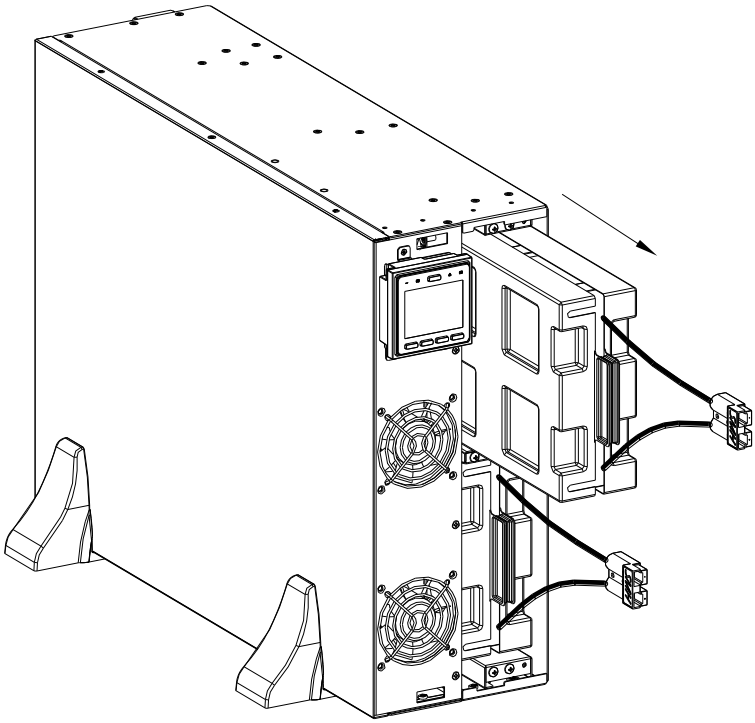

❺

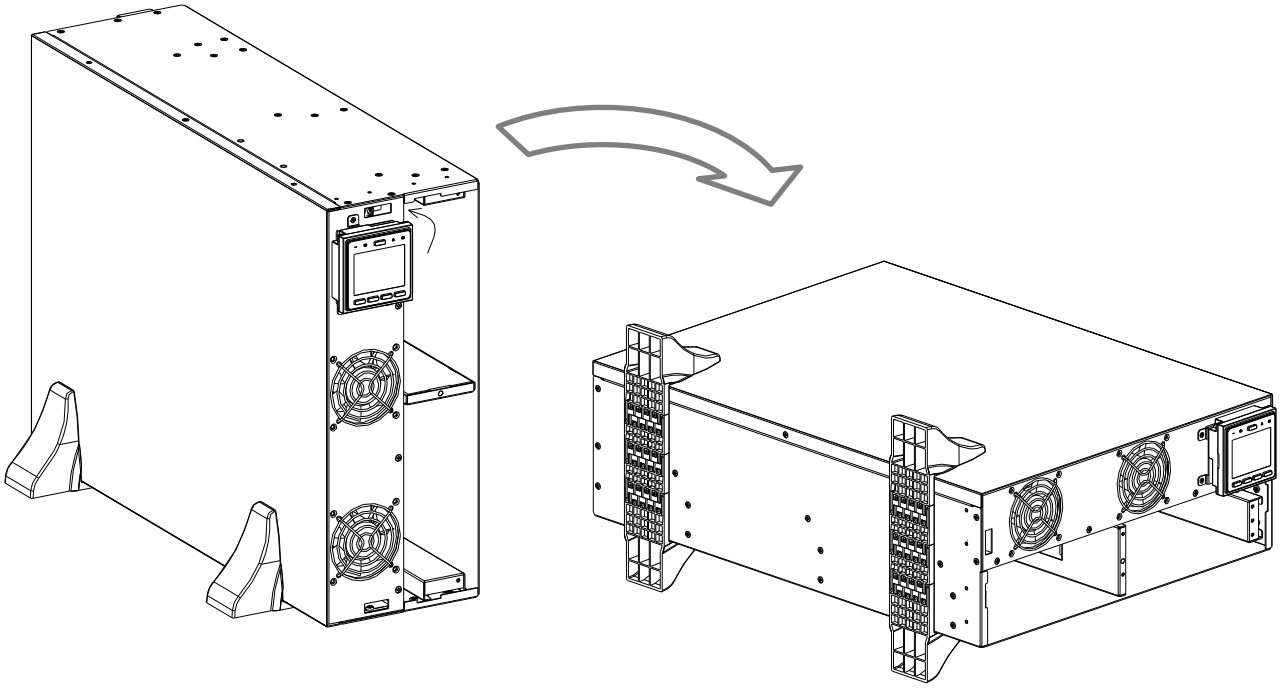

❻

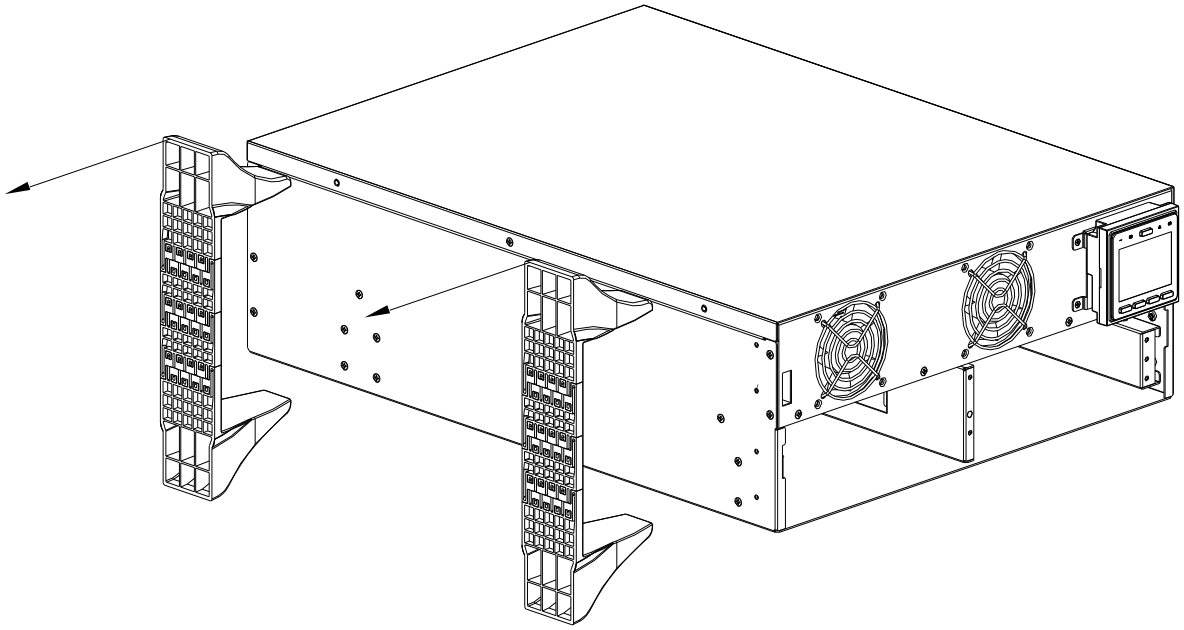

Install UPS with Battery Module in a Rack

UPS model may differ in appearance from those depicted in these graphics.
The XLBP installation process is identical for all models.

Refer to the rail kit Installation Guide for instructions on rail installation.

⚠ CAUTION

DAMAGE TO EQUIPMENT OR PERSONNEL

- The equipment is heavy. Always practice safe lifting techniques adequate for the weight of the equipment.
- Always use the recommended number of screws to secure brackets to the UPS.
- Always use the recommended number of screws to secure the UPS to the rack.
- Always install the XLBP at the bottom of the rack.
- Always install the XLBP below the UPS in the rack.
- Use the battery module handle to slide the battery modules in or out of the XLBP.
- Do not use the battery module handle to lift or carry the battery module.

Failure to follow these instructions can result in equipment damage and minor or moderate injury.

⚠ CAUTION

RISK OF HYDROGEN SULPHIDE GAS AND EXCESSIVE SMOKE

- Replace the battery at least every 5 years.
- Replace the battery immediately when the UPS indicates battery replacement is necessary.
- Replace battery at the end of its service life.
- Replace batteries with the same number and type of batteries as originally installed in the equipment.
- Replace the battery immediately when the UPS indicates a battery over-temperature condition, or UPS internal over-temperature, or when there is evidence of electrolyte leakage. Power off the UPS, unplug it from the AC input, and disconnect the batteries. Do not operate the UPS until the batteries have been replaced.
- *Replace all battery modules (including the modules in External Battery Packs) which are older than one year, when installing additional battery packs or replacing the battery module(s).

Failure to follow these instructions can result in injury.

* Contact APC by Schneider Electric Worldwide Customer Support to determine the age of the installed battery modules.

❶ Secure the brackets on UPS with 8 screws.

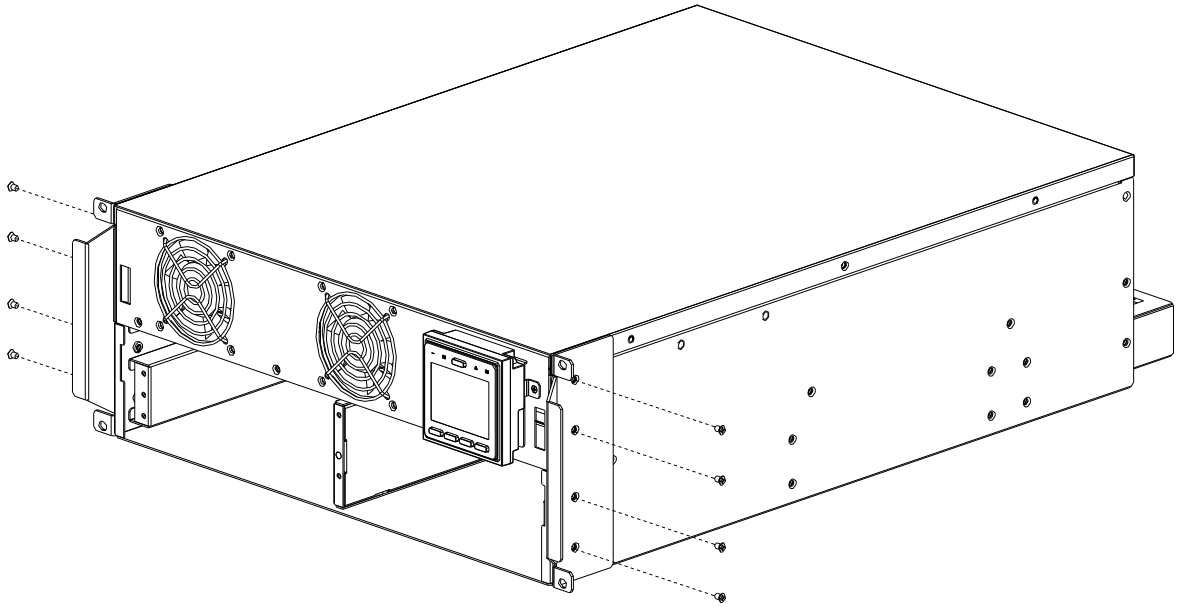

❷ Put UPS on the rail.

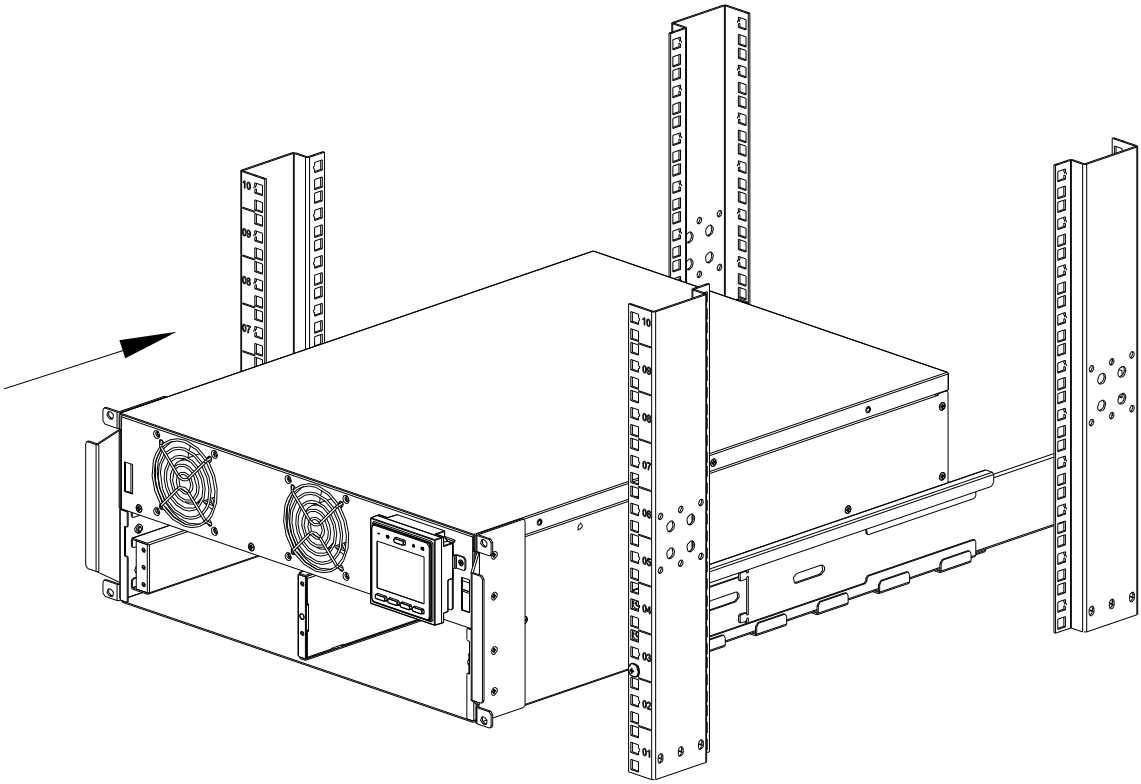

❸ Secure brackets to pillars with 4 screws.

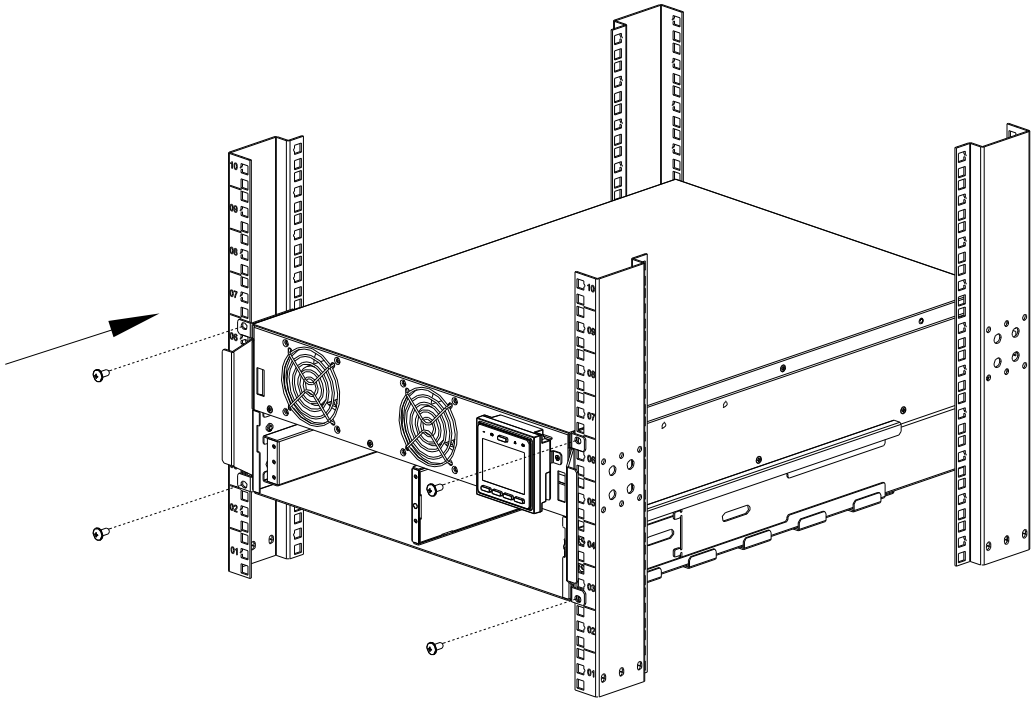

❹ Put 2 battery modules into UPS.

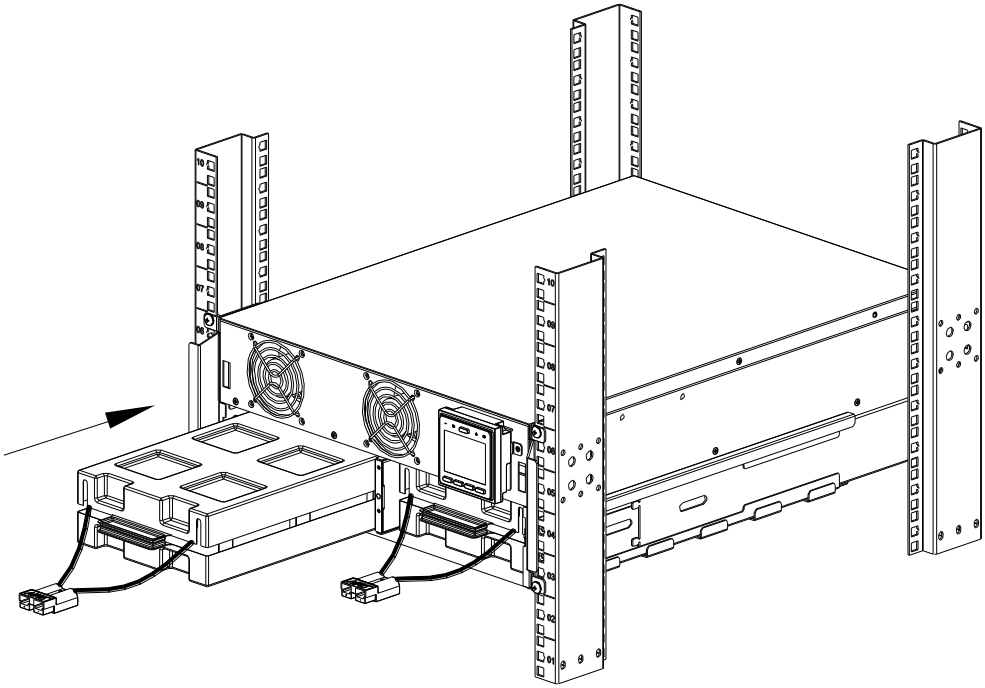

❺ Secure the battery door with 6 screws.

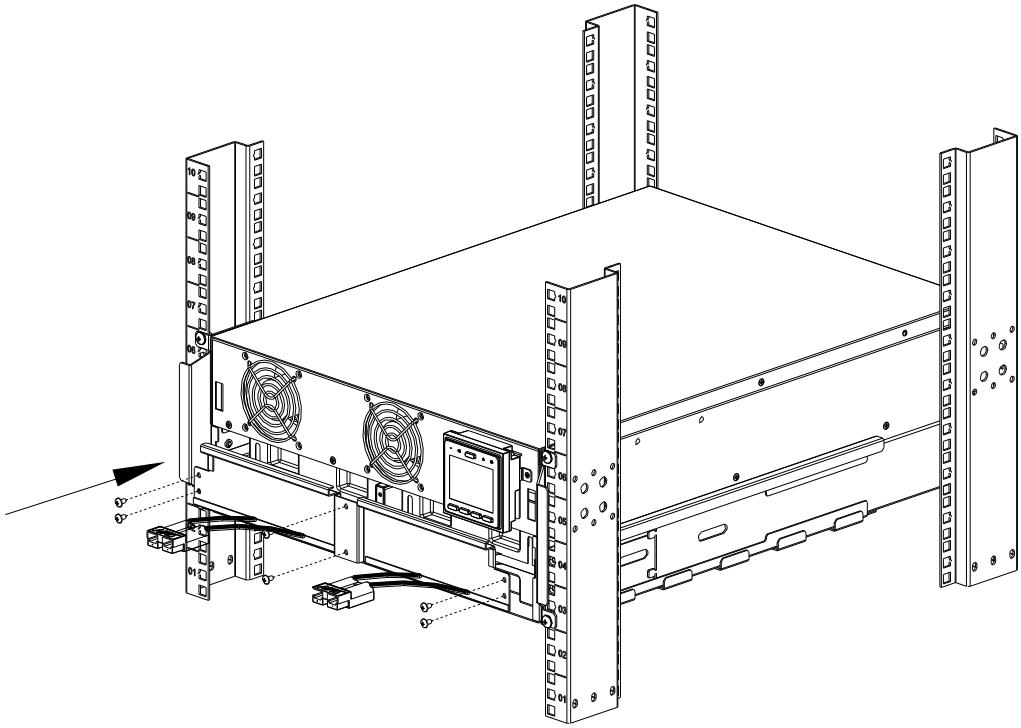

❻ Connect battery input wires.

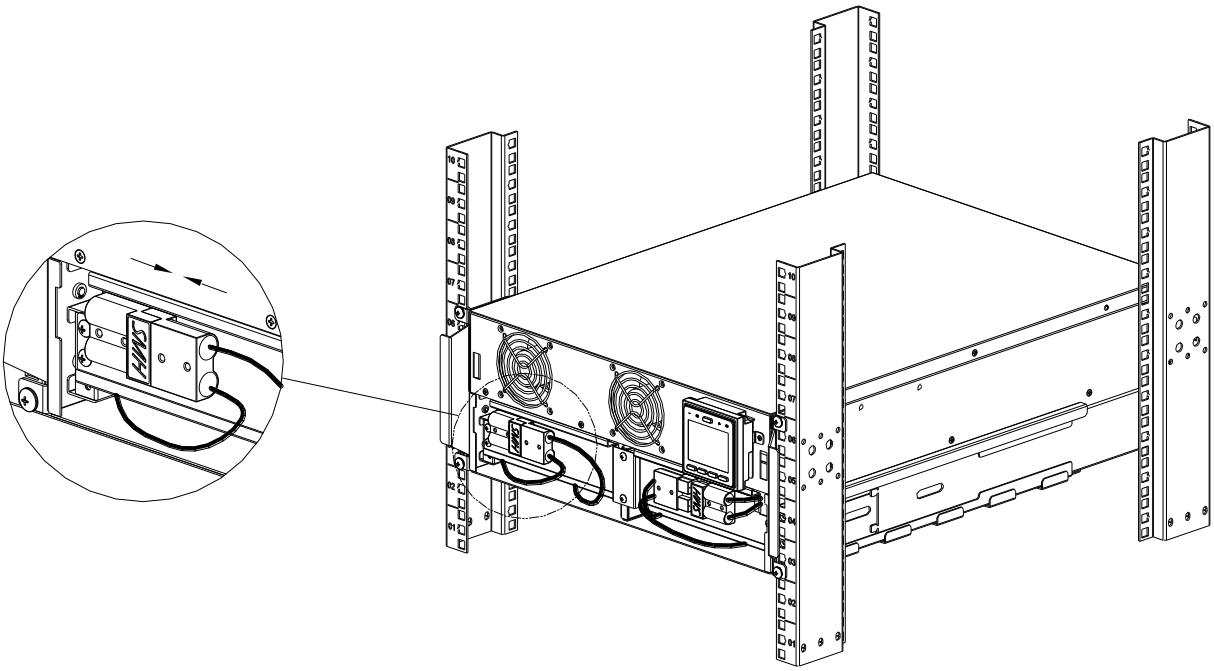

❼ Install the front bezel of UPS.

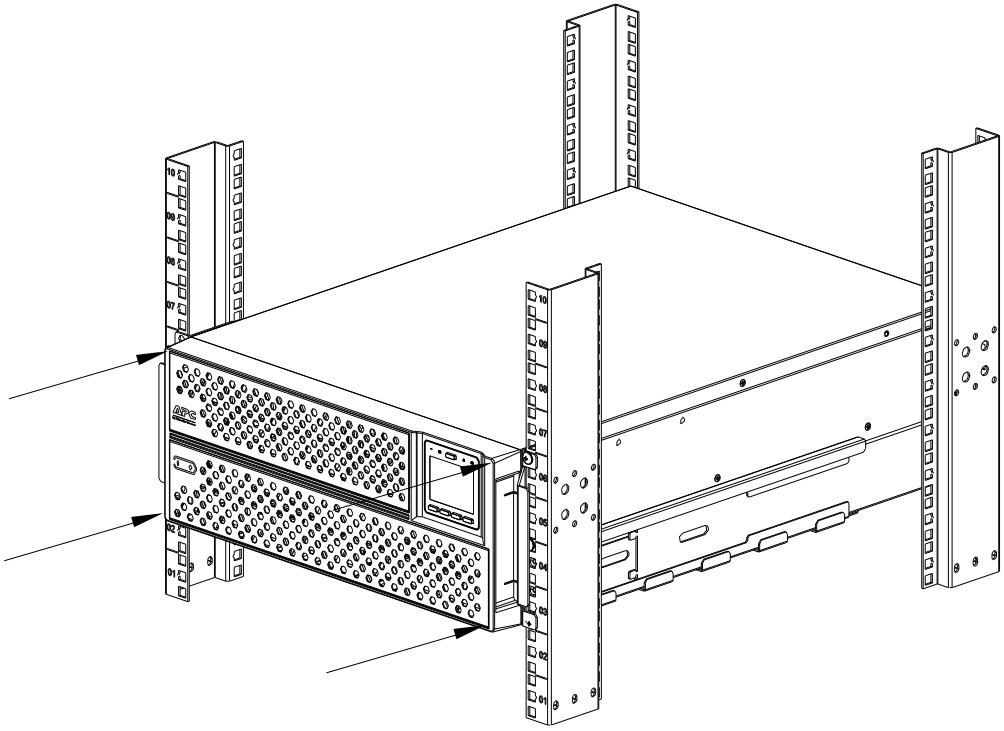

APC by Schneider Electric Worldwide Customer Support

Customer support for this or any other APC™ by Schneider Electric product is available at no charge in any of the following ways:

- Visit the APC web site to access documents in the APC Knowledge Base and to submit customer support requests.
  - **www.apc.com** (Corporate Headquarters)
    Connect to localized APC web sites for specific countries, each of which provides customer support information.
  - **www.apc.com/support/**
    Global support searching APC Knowledge Base and using e-support.
- Contact APC Customer Support Center by telephone or e-mail.
  - Local, country specific centers: go to **www.apc.com/support/contact** for contact information.

For information on how to obtain local customer support, contact the APC by Schneider Electric representative or other distributor from whom you purchased your APC by Schneider Electric product.

Customer support and warranty information are available on the APC web site, **www.apc.com**.

© 2019 APC by Schneider Electric. APC, the APC logo, and Smart-UPS are owned by Schneider Electric Industries S.A.S., or their affiliated companies. All other trademarks are property of their respective owners.

EN 990-6211
10/2019