Operation Manual

Smart-UPS™ On-Line SRT Uninterruptible Power Supply

SRT8KXLI
SRT8KRMXLI
SRT8KXLT
SRT8KRMXLT
SRT8KXLT-IEC
SRT8KRMXLT-IEC
SRT10KXLI
SRT10KRMXLI
SRT10KXLT
SRT10KRMXLT
SRT10KXLT-IEC
SRT10KRMXLT-IEC

208/220/230/240 Vac

Tower/Rack-Mount 6U

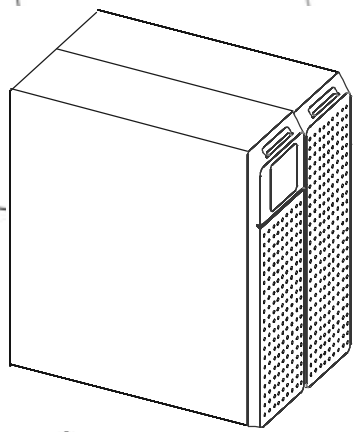

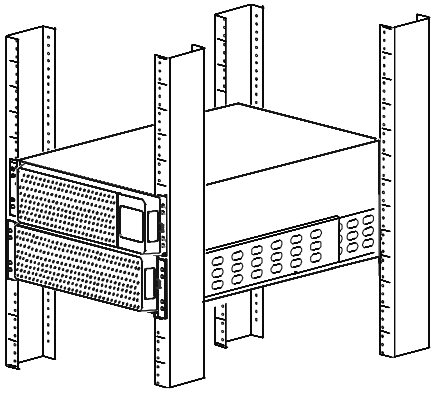

Product Description

The APC™ by Schneider Electric Smart-UPS™ On-Line SRT is a high performance uninterruptible power supply (UPS). The UPS helps provide protection for electronic equipment from utility power blackouts, brownouts, sags, surges, small utility power fluctuations and large disturbances. The UPS also provides battery backup power for connected equipment until utility power returns to safe levels or the batteries are completely discharged.

This user manual is available on the enclosed Documentation CD and on the APC web site, www.apc.com.

General Information

Safety Messages

Read the instructions carefully to become familiar with the equipment before attempting to install, operate, service or maintain the UPS. The following special messages may appear throughout this manual or on the equipment to warn of potential hazards or to call attention to information that clarifies or simplifies a procedure.

The addition of this symbol to a Danger or Warning product safety label indicates that an electrical hazard exists which will result in personal injury if the instructions are not followed.

The addition of this symbol to a Warning or Caution product safety label indicates that a hazard exists that can result in injury and product damage if the instructions are not followed.

⚠ CAUTION
CAUTION indicates a potentially hazardous situation which, if not avoided, **can result in** minor or moderate injury.

NOTICE
NOTICE addresses practices not related to physical injury including certain environmental hazards, potential damage or loss of data.

Safety and General Information

- Adhere to all national and local electrical codes.
- All wiring must be performed by a qualified electrician.
- Changes and modifications to this unit not expressly approved by APC could void the warranty.
- This unit is intended only for indoor use in a controlled environment.
- Do not operate this unit in direct sunlight, in contact with fluids, or where there is excessive dust or humidity.
- Be sure the air vents on this unit are not blocked. Allow adequate space for proper ventilation.
- For a UPS with a factory installed power cord, connect the UPS power cable directly to a wall outlet. Do not use surge protectors or extension cords.
- The battery typically lasts for two to five years. Environmental factors impact battery life. Elevated ambient temperatures, poor quality utility power, and frequent short duration discharges will shorten battery life.
- Replace the battery immediately when the UPS indicates battery replacement is necessary.
- The UPS will recognize as many as 10 external battery packs connected to the UPS.
  If more that 10 XLPBs are to used, the communication cables for XLPBs number 11 and over must be disconnected.
  Note: For each XLBP that is added, increased recharge time will be required.
- The equipment is heavy. Always practice safe lifting techniques adequate for the weight of the equipment.
- The batteries are heavy. Remove the batteries before installing the UPS and external battery packs (XLBPs), in a rack.
- Always install XLBPs at the bottom in rack-mount configurations. The UPS must be installed above the XLBPs.
- Always install peripheral equipment above the UPS in rack-mount configurations.
- Additional safety information can be found in the Safety Guide supplied with this unit.

Deenergizing safety

The UPS contains internal batteries and may present a shock hazard even when disconnected from the branch circuit (mains). Before installing or servicing the equipment verify the following:

- Mains circuit breaker is in the **OFF** position.
- Internal UPS batteries are removed.
- XLBP battery modules are disconnected.

Electrical safety

- For models with a hardwired input, the connection to the branch circuit (mains) must be performed by a qualified electrician.
- 230 V models only: In order to maintain compliance with the EMC directive for products sold in Europe, output cords attached to the UPS must not exceed 10 meters in length.
- The protective earth conductor for the UPS carries the leakage current from the load devices (computer equipment). An insulated ground conductor is to be installed as part of the branch circuit that supplies the UPS. The conductor must have the same size and insulation material as the grounded and ungrounded branch circuit supply conductors. The conductor will typically be green and with or without a yellow stripe.
- The UPS input ground conductor must be properly bonded to protective earth at the service panel.
- If the UPS input power is supplied by a separately derived system, the ground conductor must be properly bonded at the supply transformer or motor generator set.

Battery safety

- Before installing or replacing the batteries, remove jewelry such as wristwatches and rings. High short circuit current through conductive materials could cause severe burns.
- Do not dispose of batteries by burning them. The batteries may explode.
- Do not open or mutilate batteries. Released electrolyte is harmful to the skin and eyes, and may be toxic.

Hardwire safety

- Verify that all branch circuit (mains) and low voltage (control) circuits are deenergized, and locked out before installing cables or making connections, whether in the junction box or to the UPS.
- Wiring by a qualified electrician is required.
- Check national and local codes before wiring.
- Strain relief is required for all hardwiring (not supplied). Snap in type strain reliefs are recommended.
- All openings that allow access to UPS hardwire terminals must be covered. Failure to do so may result in personal injury or equipment damage.
- Select wire size and connectors according to national and local codes.

General information

- The UPS will recognize as many as 10 external battery packs connected to the UPS. However there is no limit to the number of XLBPs that can be used with the UPS.
  Note: For each XLBP added, increased recharge time will be required.
- The model and serial numbers are located on a small, rear panel label. For some models, an additional label is located on the chassis under the front bezel.
- Always recycle used batteries.
- Recycle the package materials or save them for reuse.

Product Overview

Specifications

For additional specifications refer to the APC web site, **www.apc.com**.

Environmental

Temperature	Operating	0° to 40° C (32° to 104° F)
	Storage	-15° to 45° C (5° to 113° F)
Maximum Elevation	Operating	0 - 3,000 m (0 - 10,000 ft)
	Storage	0 - 15,000 m (0 - 50,000 ft)
Humidity	0% to 95% relative humidity, non-condensing	
Protection Class	IP 20 rating	
Note: Charge the battery modules every six months during storage. Environmental factors impact battery life. Elevated ambient temperatures, high humidity, poor quality mains power, and frequent short duration discharges will shorten battery life.		

Physical

The UPS is heavy. Follow all lifting guidelines.

Lifting guidelines	>55 kg (>120 lb)
Unit weight without packaging	111.82 kg (246 lb)
Unit weight with packaging	Rack-Mount models: 130 kg (286 lb) Tower models: 126.82 kg (279 lb)
Unit dimensions without packaging **Height x Width x Depth**	263 mm x 432 mm x 715 mm 10.35 in x 17 in x 28.15 in
Unit dimensions with packaging **Height x Width x Depth**	461 mm x 600 mm x 1000 mm 18.2 in x 23.62 in x 39.4 in
The model and serial numbers are on a small label located on the rear panel.	

Battery

Battery type	Maintenance free, leak proof, sealed, lead acid
Replacement battery module This UPS has replaceable battery modules. Refer to the appropriate replacement battery user manual for installation instructions. Contact your dealer or go the APC web site, **www.apc.com** for information on replacement batteries.	APCRBC140
Number of battery modules	4 battery modules
Voltage for each battery module **Total voltage for the UPS** **Ah rating**	96 VDC ± 192 VDC 5.1 Ah per battery module
XLBP cable length	500 mm (19.7 in)

Electrical

Models	Rating
SRT8KXLT	8 kVA/8 kW
SRT8KRMXLT	
SRT8KXLT-IEC	
SRT8KRMXLT-IEC	
SRT8KXLI	
SRT8KRMXLI	
SRT10KXLT	10 kVA/10 kW
SRT10KRMXLT	
SRT10KXLT-IEC	
SRT10KRMXLT-IEC	
SRT10KXLI	
SRT10KRMXLI	

Output	
Output Frequency	50 Hz/60 Hz ± 3 Hz
Nominal Output Voltage	SRT8KXLI/SRT8KRMXLI/SRT10KXLI/SRT10KRMXLI: 220Vac/230Vac/240Vac SRT8KXLT/SRT8KRMXLT/SRT10KXLT/SRT10KRMXLT: 208Vac/240Vac SRT8KXLT-IEC/SRT8KRMXLT-IEC/SRT10KXLT-IEC/SRT10KRMXLT-IEC: 208Vac/240Vac
Input	
Input Frequency	40 Hz-70 Hz
Nominal Input Voltage	SRT8KXLI/SRT8KRMXLI/SRT10KXLI/SRT10KRMXLI: 220Vac/230Vac/240Vac SRT8KXLT/SRT8KRMXLT/SRT10KXLT/SRT10KRMXLT: 208Vac/240Vac SRT8KXLT-IEC/SRT8KRMXLT-IEC/SRT10KXLT-IEC/SRT10KRMXLT-IEC: 208Vac/240Vac

Front panel features

❶ UPS Display Interface panel

❷ UPS battery compartment doors x2

❸ UPS battery connectors x4

❹ Bezels x2

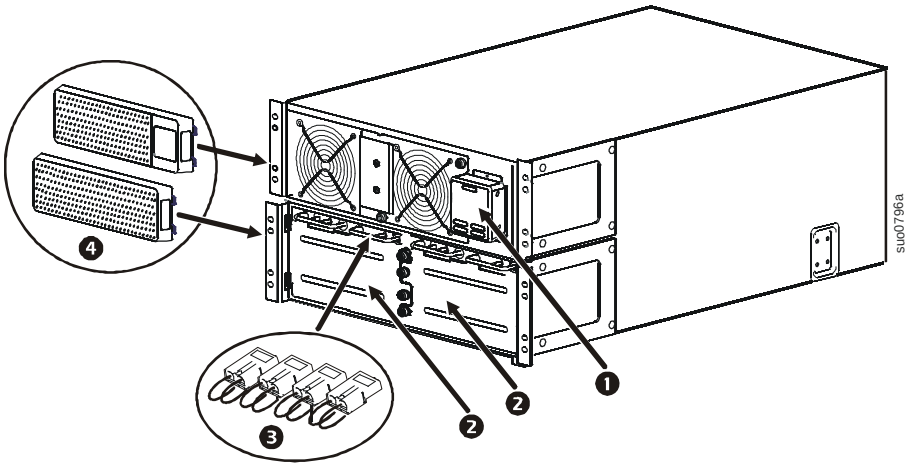

Rear panel features

Note: Refer to the table “Key to identify rear panel features” on page 8, that provides a key to the callout numbers for the rear panel graphics depicted in this manual.

SRT8KXLT/SRT8KRMXLT/SRT10KXLT/SRT10KRMXLT

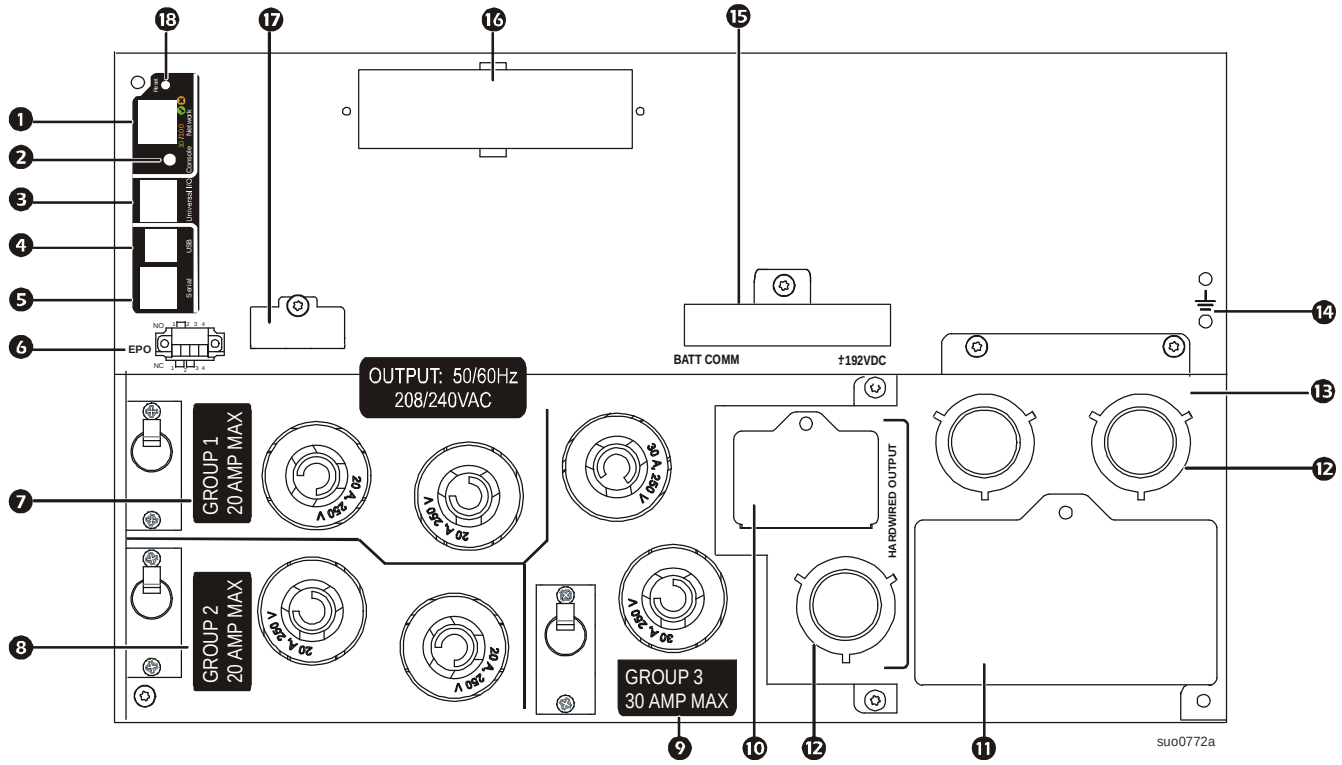

SRT8KXLT-IEC/SRT8KRMXLT-IEC/SRT10KXLT-IEC/SRT10KRMXLT-IEC

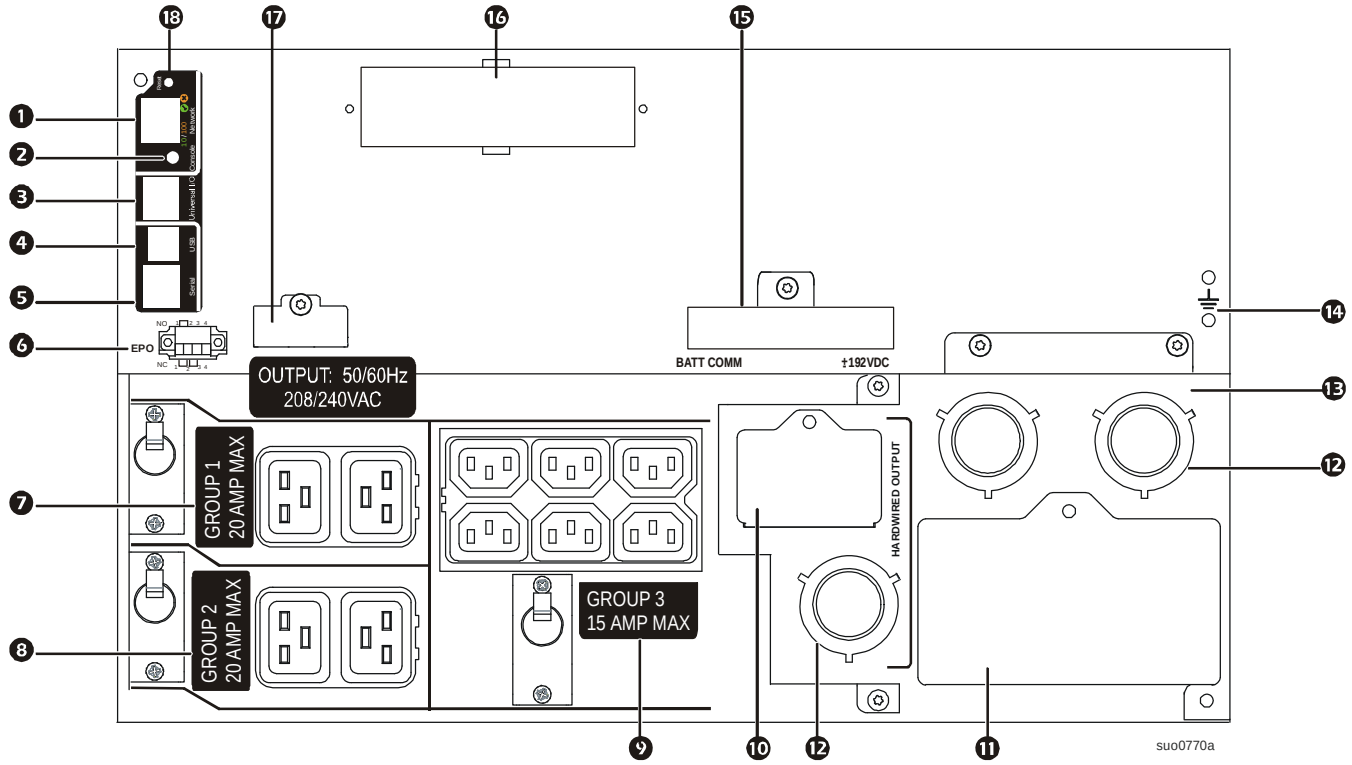

SRT8KXLI/SRT8KRMXLI/SRT10KXLI/SRT10KRMXLI

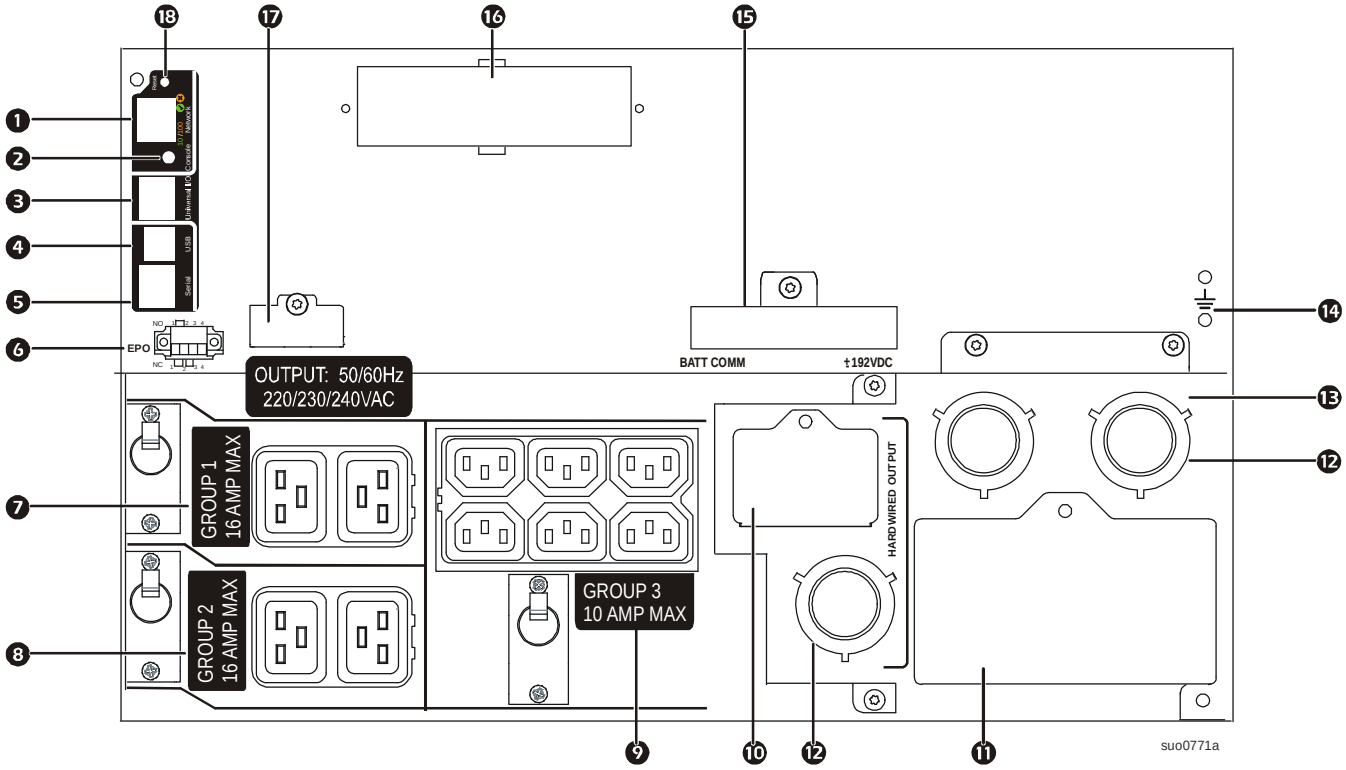

Key to identify rear panel features

❶	**Network port**	Use the Network port to connect the UPS to the network.
❷	**Console port**	Use the Console port to configure the network management features.
❸	**Universal I/O port**	Use to connect: • Temperature sensor AP9335T (supplied) • Temperature/humidity sensor AP9335TH (not supplied) • Relay input/output connector AP9810 (not supplied), supports two input contacts and one output relay
❹	**USB port**	The USB port is used to connect either a server for native operating system communications, or for software to communicate with the UPS. **Note:** Serial and USB communication should not be used simultaneously. Use either the Serial Com or the USB port.
❺	**Serial Com**	The Serial Com port is used to communicate with the UPS. **Use only interface kits supplied or approved by APC by Schneider Electric. Any other serial interface cable will be incompatible with the UPS connector.**
❻	**EPO terminal**	The Emergency Power Off (EPO) terminal allows the user to connect the UPS to a central EPO system.
❼	**Controllable outlet group 1, with circuit breaker**	Connect electronic devices to these outlets. In the event an overload condition occurs, disconnect nonessential equipment. Then reset the circuit breaker.
❽	**Controllable outlet group 2, with circuit breaker**	Connect electronic devices to these outlets. In the event an overload condition occurs, disconnect nonessential equipment. Then reset the circuit breaker.
❾	**Controllable outlet group 3, with circuit breaker**	Connect electronic devices to these outlets. In the event an overload condition occurs, disconnect nonessential equipment. Then reset the circuit breaker.
❿	**AC output inspection panel**	Remove the panel to inspect the output terminal block wiring configuration. The terminal block is located behind the inspection cover. Refer to “Wiring Specifications” on page 9 for hardwire specifications.
⓫	**AC input inspection panel**	Remove the panel to inspect the input terminal block wiring configuration. The terminal block is located behind the inspection cover. Refer to “Wiring Specifications” on page 9 for hardwire specifications.
⓬	**AC hardwire knockouts**	Remove the 38.1 mm (1.5 in) knockout panels for AC input and output hardwiring. Install appropriate strain reliefs (not supplied).
⓭	**Hardwire box input/output**	Remove the box to connect input and output wires to the hardwire terminal blocks.
⓮	**Chassis ground screws**	The UPS and XLBPs have ground screws for connecting the ground leads. Prior to connecting a ground lead, disconnect the UPS from mains power.
⓯	**External battery power and communication connectors**	Use the external battery power and communication cables to connect the UPS and XLBP. XLBPs provide extended runtime during power outages. The UPS will automatically recognize up to 10 external battery packs.
⓰	**SmartSlot**	The SmartSlot can be used to connect optional management accessories.
⓱	**PRL COMM port**	This port is not used with these products.
⓲	**Reset button**	Use the Reset button to restart the Network Management Interface. Note: A restart of the Network Management Interface does not affect UPS operation.

Wiring Specifications

⚠ CAUTION

DAMAGE TO EQUIPMENT OR PERSONNEL

- Adhere to all national and local electrical codes.
- Wiring should be performed by a qualified electrician.
- Strain reliefs are not supplied with the unit. 38.1 mm (1 1/2 in) snap in type strain reliefs are recommended.
- The UPS must be wired into a branch circuit, equipped with a circuit breaker rated as specified in the tables below.
- Actual wire size must comply with required ampacity and national and local electrical codes.
  Select wire size based on wire insulation, installation method, and environmental conditions.
- Recommended ~~input~~ terminal screw torque:
  16 mm^2 or 6 AWG = 5.09 Nm (45 lbf-in)
  25 mm^2 or 4 AWG = 5.09 Nm (45 lbf-in)
  4 mm^2 or 12 AWG = 3.969 Nm (35 lbf-in)

Failure to follow these instructions can result in equipment damage and minor or moderate injury

Single Feed						
System	**Wiring**	**Number of Phases**	**Voltage**	**Current Full Load (nominal)**	**External Input Circuit Breaker Mains (typical)**	**Wire Size Mains (typical)**
SRT8KXLT	Input	1	208/240 Vac	47 A	60 A / 2-pole	16 mm^2 or 6 AWG
	Output	1	208/240 Vac	40 A		16 mm^2 or 6 AWG
SRT10KXLT	Input	1	208/240 Vac	56 A	70 A / 2-pole	25 mm^2 or 4 AWG
	Output	1	208/240 Vac	49 A		16 mm^2 or 6 AWG
SRT8KXLI	Input	1	220/230/240 Vac	44 A	63 A / 2-pole	16 mm^2 or 6 AWG
	Output	1	220/230/240 Vac	38 A		16 mm^2 or 6 AWG
	Input	3	380/400/415 Vac	15 A 44 A*	63 A / 4-pole	16 mm^2 or 6 AWG
	Output	1	220/230/240 Vac	38 A		16 mm^2 or 6 AWG
SRT10KXLI	Input	1	220/230/240 Vac	54 A	80 A / 2-pole	25 mm^2 or 4 AWG
	Output	1	220/230/240 Vac	47 A		16 mm^2 or 6 AWG
	Input	3	380/400/415 Vac	18 A 54 A*	80 A / 4-pole	25 mm^2 or 4 AWG
	Output	1	220/230/240 Vac	47 A		16 mm^2 or 6 AWG

*** Phase 1 (L1) current while in bypass mode**

Dual Feed								
System	**Wiring**	**Number of Phases**	**Voltage**	**Current Full Load (nominal)**	**External Input Circuit Breaker Mains (typical)**	**External Input Circuit Bypass Mains (typical)**	**Wire Size Mains (typical)**	**Wire Size Bypass (typical)**
SRT8KXLI	Input	1	220/230/240 Vac	44 A	63 A / 2-pole	63 A / 2-pole	16 mm^2 or 6 AWG	16 mm^2 or 6 AWG
	Input	3	380/400/415 Vac	15 A	20 A / 4-pole	63 A / 2-pole	4 mm^2 or 12 AWG	16 mm^2 or 6 AWG
	Output	1	220/230/240 Vac	38 A			16 mm^2 or 6 AWG	16 mm^2 or 6 AWG
SRT10KXLI	Input	1	220/230/240 Vac	54 A	80 A / 2-pole	80 A / 2-pole	25 mm^2 or 4 AWG	25 mm^2 or 4 AWG
	Input	3	380/400/415 Vac	18 A	25 A / 4-pole	80 A / 2-pole	4 mm^2 or 12 AWG	25 mm^2 or 4 AWG
	Output	1	220/230/240 Vac	47 A			16 mm^2 or 6 AWG	16 mm^2 or 6 AWG

Connect Equipment

⚠ CAUTION

DAMAGE TO EQUIPMENT OR PERSONNEL

- Disconnect the mains input circuit breaker before installing or servicing the UPS or connected equipment.
- Disconnect internal and external batteries before installing or servicing the UPS or connected equipment.
- The UPS contains internal and external batteries that may present a shock hazard even when disconnected from the mains.
- UPS AC hardwired and pluggable outlets may be energized by remote or automatic control at any time.
- Disconnect equipment from the UPS before servicing any equipment.

Failure to follow these instructions can result in equipment damage and minor or moderate injury.

Note: The UPS batteries will charge to 90% capacity in the first three hours of normal operation. **Do not expect full battery runtime capability during this initial charge period.**

1. Connect the UPS to the building utility power. Refer to the UPS Installation Guide.
2. Connect equipment to the outlets on the rear panel of the UPS.
   Refer to “Controllable Outlet Groups” on page 19.

Turn the UPS On/Off

The first time the UPS is turned on the **Setup Wizard** screen will run. Follow the prompts to configure UPS settings. Refer to “Configuration” on page 15.

To turn on the UPS and all connected equipment, press the **Power ON/OFF** button on the display panel. Follow the prompts to either turn the UPS on immediately or after a delay, then press OK.
NOTE: When there is no input power and the UPS is off, the cold start feature can be used to turn on the UPS and connected equipment using battery power.
To perform a cold start press the **Power ON/OFF** button.
The display panel will illuminate and the **Power ON/OFF** button will illuminate red.
To turn on the output power press the **Power ON/OFF** button again. Select the prompt **Turn ON with NO AC** and press OK.

To turn output power off, press the **Power ON/OFF** button. Follow the prompts to either turn the UPS off immediately or after a delay, then press OK.
NOTE: Once the AC power has been turned off the UPS will continue operating on battery power for a short period of time. To remove power completely press the **Power ON/OFF** button. Follow the prompt to select Internal Power Off, then press OK.

UPS Display Interface

❶	POWER ON/OFF **button** Button illumination indications: -No illumination, the UPS and the output power are off -White illumination, the UPS and the output power are on -Red illumination, the UPS is on and the output power is off
❷	**Load icon** **Disable/mute audible alarm icon**
❸	**UPS status information**
❹	**Operation mode icons**
❺	ESCAPE **button**
❻	OK **button**
❼	UP/DOWN **buttons**
❽	**Controllable outlet group status icons**
❾	**Battery status icons**

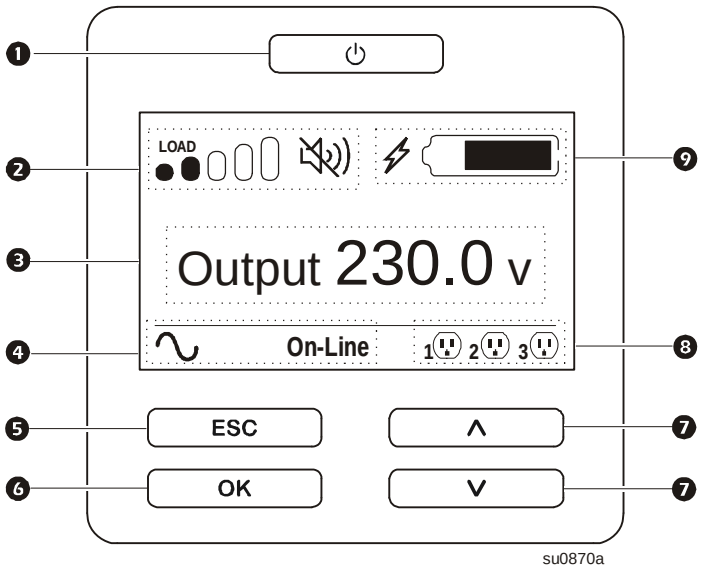

The icons on the LCD display interface screen may vary depending on the installed firmware version.	
LOAD	**Load icon:** The approximate load capacity percentage is indicated by the number of load bar sections illuminated. Each bar represents 16% of the load capacity.
	Mute icon: Indicates the audible alarm is disabled/mute.

UPS Status Information

The status information field provides key information on the status of the UPS.
The **Standard** menu will allow the user to select one of the following screens.
The **Advanced** menu will scroll through the following five screens.

Input Voltage

Output Voltage

Output Frequency

Load

Runtime

In the case of a UPS event, status updates will be displayed defining the event or condition that has occurred.
The display screen illuminates amber to indicate a Warning and red to indicate an Alert depending on the severity of the event or condition.

Operation Mode Icons	
	On-Line mode: The UPS is supplying conditioned mains power to connected equipment.
	Bypass mode: The UPS is in **Bypass** mode and the connected equipment will receive mains power as long as the input voltage and frequency are within the configured limits.
	Green mode: When in **Green** mode mains power is sent directly to the load. In the event of a mains power outage, there will be an interruption in power to the load of up to 8 ms while the UPS switches to **On-Line** or **Battery** mode. When enabling **Green** mode consideration should be given to devices that may be sensitive to power fluctuations.
	Battery mode: The UPS is supplying battery power to connected equipment.
Controllable Outlet Group Icons	
	Controllable Outlet Group Power Available: The number next to the icon identifies the specific outlet groups that have available power.
	Controllable Outlet Group Power Not Available: The number next to the icon identifies specific outlet groups that do not have available power.
Battery Status Icons	
	Battery Charge Status: Indicates the battery charge status.
	Battery Charge In Progress: Indicates the battery is charging.

UPS Display Interface operation

Use the UP/DOWN buttons to scroll through the options. Press the OK button to accept the selected option. Press the ESC button to return to the previous menu.

Menu overview

The UPS Display Interface has **Standard** and **Advanced** menu screens. The preference for **Standard** or **Advanced** menu selections is made during initial installation and can be changed at any time through the **Configuration** menu.

The **Standard** menus include the most commonly used options.

The **Advanced** menus provide additional options.

Note: Actual menu screens may differ by model and firmware version.

LCD display interface angle adjustment

The angle of the LCD display interface can be adjusted for ease in viewing the displayed messages.

1. Remove the front bezel.
2. Locate the button on the bottom of the display interface panel.
3. Press the button and slide the bottom of the LCD display interface screen out. An audible click will be heard when the screen reaches the maximum angle.

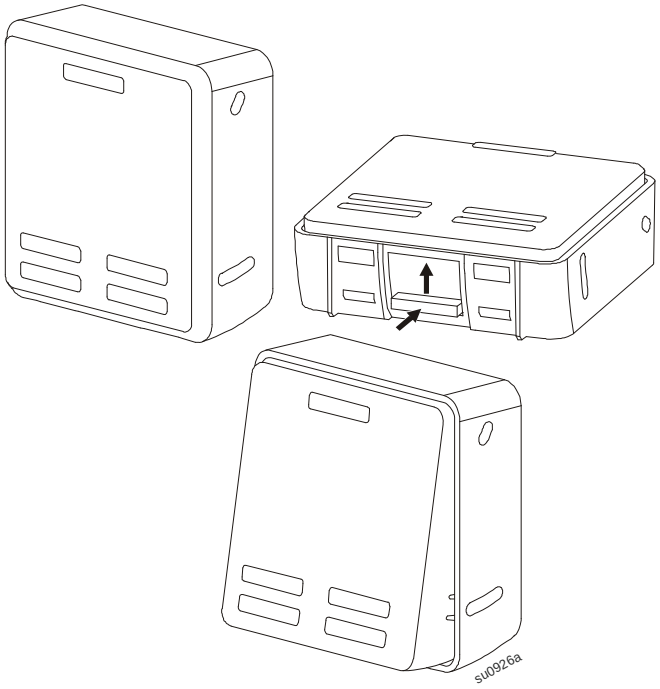

Configuration Menus Overview

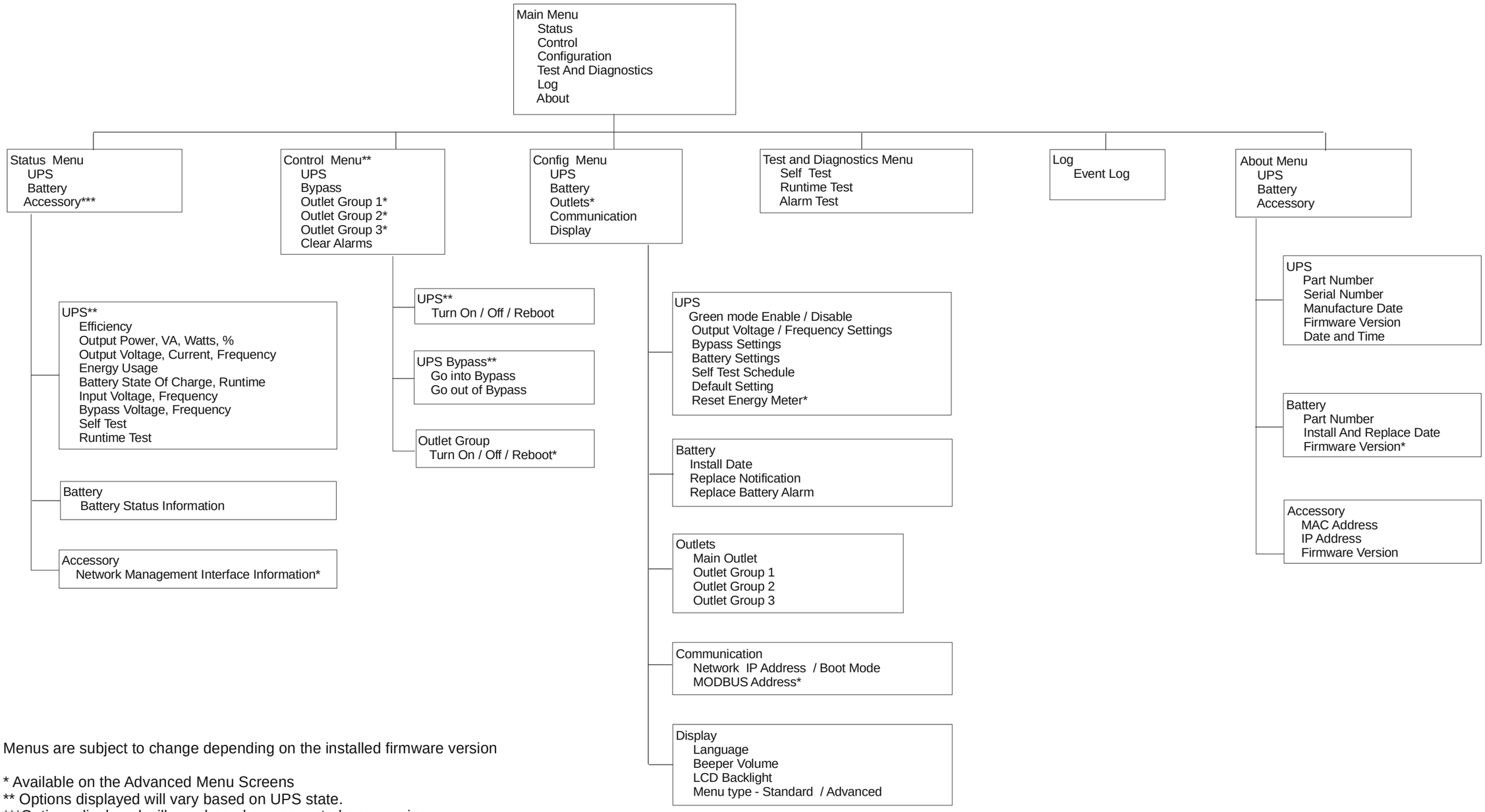

Menus are subject to change depending on the installed firmware version

* Available on the Advanced Menu Screens
** Options displayed will vary based on UPS state.
***Options displayed will vary based on connected accessories.

Configuration

UPS Settings

There are four ways to select UPS configuration options.

1. The first time the UPS is turned on the **Setup Wizard** screen will open. On each menu screen select the desired settings. Press OK after each UPS setting is selected.

Note: The UPS will not turn on until all of the settings have been configured.

Startup configuration

Function	Description
	Select the language required for the UPS Display Interface. Language options will vary by model and firmware version. Options: • English • Francais • Italiano • Deutch • Espanol • Portugues • Russian
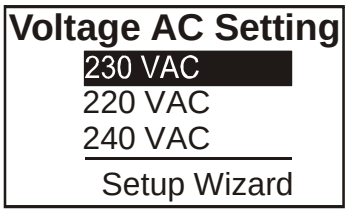	Available output voltage selection will vary depending on the model. Select the output voltage. Options: • 208 Vac • 220 Vac • 230 Vac • 240 Vac
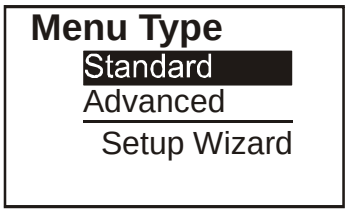	The **Standard** menu options are the most commonly used options. The **Advanced** menu options will be used by IT professionals who need detailed configuration and reporting information.

General settings

Configure these settings at any time, using the UPS Display Interface, or the Network Management web Interface.

	Parameters	Default Value	Options	Description
Config Menu UPS	**Green Mode**	Disabled	Disable Enable	Disable or enable **Green** mode operation
	AC Setting	User Choice	230 V, 220 V, 240V, 208 V	Set the output voltage for the UPS. This setting can only be changed when the UPS output is off. These settings may vary depending on the UPS model.
	Output Lower Acceptable Voltage	184 V for 208 V output 198 V for 220 V output 207 V for 230 V output 216 V for 240 V output	208 V - 169 to 184 V 220 V - 186 to 198 V 230 V - 195 to 207 V 240 V - 204 to 216 V	If the UPS input voltage is between the lower acceptable voltage and the higher acceptable voltage, the UPS will operate in **Green** mode when enabled. If the output voltage goes outside the acceptable range the UPS will switch from **Green** mode to **On-Line** mode or to **Battery** mode.
	Output Upper Acceptable Voltage	220 V for 208 V output 242 V for 220 V output 253 V for 230 V output 264 V for 240 V output	208 V - 220 to 235 V 220 V - 242 to 253 V 230 V - 253 to 265 V 240 V - 264 to 270 V	
	Output Frequency	Auto 50/60 ± 3 Hz	Auto 50/60 ± 3 Hz 50 ± 0.1 Hz 50 ± 3.0 Hz 60 ± 0.1 Hz 60 ± 3.0 Hz	Set the output frequency for the UPS.
	Output Frequency Slew Rate	1 Hz/Sec	0.5 Hz/Sec 1 Hz/Sec 2 Hz/Sec 4 Hz/Sec	Select the rate of change for output frequency in Hertz per second.
	Bypass Lower Acceptable Voltage	160 V	208 V - 160 to 184 V 220 V - 160 to 198 V 230 V - 160 to 207 V 240 V - 160 to 216 V	If the UPS input voltage is between the lower acceptable voltage and the higher acceptable voltage, the UPS can enter **Bypass** mode when enabled.
	Bypass Upper Acceptable Voltage	250 V for 208 V output 255 V for 220 V output 265 V for 230 V output 270 V for 240 V output	208 V - 220 to 250 V 220 V - 242 to 264 V 230 V - 253 to 270 V 240 V - 264 to 270 V	
	Bypass Frequency Setting	Wider Frequency	Wider Frequency Use O/P Frequency Setting	The setting **Wider Frequency**, enables **Bypass** mode operation for an input frequency range of 47-63 Hertz.
	Battery Conserve Mode	Enable	Enable/Disable	When enabled this setting conserves battery by switching to Bypass source.
	Disable Bypass	No	Yes/No	The UPS will not go to Bypass mode. When UPS detects a fault the load will be dropped.
	Low Runtime Warning	150 seconds	0 to 1800 seconds	The UPS will emit an audible alarm when the remaining runtime has reached this threshold.
	Self Test Schedule	Startup + every 14 days since last test	Never Startup Startup + 14 days Startup + 7 days	This is the interval at which the UPS will execute a **Self Test**.
	Default Setting	No	Yes/No	Allows the user to restore the UPS factory default settings.
	Reset Energy Meter	No	Yes/No	The Energy Meter stores information on UPS output energy usage. The Reset feature allows the user to reset the **Energy Meter** to 0 kWh.

	Parameters	Default Value	Options	Description
Config Menu Battery	**Install Date**	Battery Installation Date	Month-Year	Enter the installation date of the RBCs.
	Replacement Notification Time	180 days	0-360 days	To set the **Near End of Life** alarm, select the number of days before the estimated battery end of life. When this date is reached the UPS will emit an alarm and a message will appear on the UPS Display Interface screen. Example: Using the default value, the **Near End of Life** alarm will occur 180 days before the estimated end of life date.
	Replacement Battery Alarm Time	14 days	0-180 days	The **Near End of Life** alarm can be muted. Enter the number of days between the time a **Near End of Life** alarm is acknowledged and the next **Near End of Life** alarm occurs.
Config Menu Display	**Language**	English	English Francais Italiano Deutch Espanol Portugues Russian	Select the language required for the UPS Display Interface. Language options will vary by model and firmware version.
	Beeper Volume	Loud	Disable Enable • Soft • Medium • Loud	When audible alarms are disabled, the UPS will never emit an audible alarm. Select the volume level for alarms when **Enable** is selected.
	LCD Back Light	Auto Dim	Always On Auto Dim Auto Off	To conserve energy, the LCD back light illumination dims or turns off when no events are active. Full UPS Display Interface illumination returns when the UPS changes status as a result of an event or when any button on the UPS Display Interface is pressed.
	LCD Setting	Optimal Values	Color Brightness Contrast	Adjust the brightness and contrast individually for each LCD back light color.
	Menu Type	User Choice	Standard Advanced	The **Standard** menus include the most commonly used options. The **Advanced** menu options include all parameters.

	Parameters	Default Value	Options	Description
Config Menu Outlets	**Power On Delay**	0 seconds	0-1800 seconds	Select the amount of time the controllable outlet groups will wait between receiving the command to turn on and actual startup.
	Power Off Delay	90 seconds	0-32767 seconds	Select the amount of time the controllable outlet groups will wait between receiving the command to shutdown and actual shutdown.
	Reboot Duration	8 seconds	4-300 seconds	Select the amount of time the controllable outlet groups will remain off before the UPS will restart.
	Minimum Return Runtime	0 seconds	0-32767 seconds	Select the amount of battery runtime that must be available before the controllable outlet groups will turn on using battery power, after a shutdown.
	Loadshed On Battery	Disable	Disable Enable	To conserve battery power the UPS can disconnect power from controllable outlet groups not in use. To configure the disconnect delay time for this feature use the **Loadshed Time On Battery** setting.
	Loadshed Time On Battery	5 seconds	5-32767 seconds	Select the amount of time the controllable outlet groups will be allowed to function on battery power before shutdown.
	Loadshed On Runtime	Disable	Disable Enable	To conserve battery power the UPS can disconnect power from controllable outlet groups when the **Loadshed Runtime** threshold is reached.
	Loadshed Runtime	0 seconds	0-3600 seconds	When the selected runtime threshold is reached the UPS will shutdown the controllable outlet groups.
	Loadshed Overload	Disable	Disable Enable	To conserve energy in the event of an overload condition greater than 105% output, the controllable outlet groups will immediately turn off. The controllable outlet groups will only turn on again with a manual restart command once the overload condition has been corrected.
Config Menu Network Manage	**IP Address Mode**		Manual, DHCP, BOOTP	Refer to the Network Management Utility CD.
	IP Address		Program IP, Subnet, Gateway	

Controllable Outlet Groups

Controllable Outlet Groups provide battery backup power to connected equipment.

Overview

The controllable outlet groups can be configured using the **Advanced** menu options.
Refer to “General settings” on page 16.

The controllable outlet groups can be configured to independently turn off, turn on, shutdown, switch to **Sleep** mode, and reboot connected equipment.

- **Turn Off:** Disconnect output power to connected equipment either immediately using the **Turn Off Immediately** feature or after a configured delay using the **Turn Off With Delay** feature.
  NOTE: Controllable outlet groups can be turned on only using the **Turn On** feature.
- **Turn On:** Connect output power to connected equipment either immediately using the **Turn On Immediately** feature or after a configured delay using the **Turn On With Delay** feature.
- **Shutdown:** Disconnects the power to connected equipment either immediately or after a configured delay. Equipment reconnects after a configured delay when mains power becomes available and other configured conditions are met.
  Each controllable outlet group can be configured separately to allow power sequencing for equipment connected to any controllable outlet group.
- **Reboot:** Disconnect the power to connected equipment either immediately or after a configured delay. Reconnect equipment after a configured delay when either mains or battery power becomes available and other configured conditions are met.
  Each controllable outlet group can be configured separately to allow power sequencing for loads connected to any controllable outlet group.
- **Sleep:** This mode is a reboot with an extended duration where a outlet(s) remain turned off.
  Disconnect the power to connected equipment either immediately or after a configured delay. Reconnect equipment after a configured delay when either mains or battery power becomes available and other configured conditions are met.
  Each controllable outlet group can be configured separately to allow power sequencing for equipment connected to any controllable outlet group.
  To configure Sleep mode use an external interface, such as the Network Management web interface.
- **Automatically turn off or shutdown** when certain conditions occur, based on user configurations set using the Config Menu Outlets menus. Refer to “Configuration” on page 15

Connect controllable outlet groups

- Connect critical equipment to one controllable outlet group.
- Connect peripheral equipment to the other controllable outlet groups.
  - To conserve battery runtime during a power outage, nonessential equipment can be configured to shut down. Use **Loadshed Time on Battery Enable/Disable** and **Loadshed Time on Battery Setting** defined in the General Settings section. Refer to “General settings” on page 16.
  - If equipment has dependent peripherals that must restart or shut down in a specific sequence, such as an ethernet switch that must restart before a connected server can be restarted, connect the devices to different outlet groups. Each controllable outlet group can be configured independently of the other groups.
- Use the **Configuration** menus to configure how the controllable outlet groups will react in the event of a power outage.

Emergency Power Off

Overview

The Emergency Power Off (EPO) option is a feature that will immediately disconnect all connected equipment from mains power. The UPS will immediately shut down and will not switch to battery power.

Connect each UPS to the EPO switch. In configurations where multiple units are connected in parallel, each UPS must be connected to the EPO switch.

The UPS must be restarted for power to return to connected equipment. Press the ON/OFF button on the front panel of the UPS.

⚠ CAUTION

RISK OF DAMAGE TO EQUIPMENT OR PERSONNEL

- Adhere to all national and local electrical codes.
- Wiring must be performed by a qualified electrician.
- Always connect the UPS to a grounded outlet.

Failure to follow these instructions can result in equipment damage and minor or moderate injury.

Normally open contacts

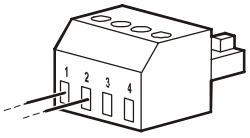

1. If the EPO switch or relay contacts are normally open, insert the wires from the switch or contacts at pins 1 and 2 of the EPO terminal block. Use 16-28 AWG wire.
2. Secure the wires by tightening the screws.

If the contacts are closed, the UPS will turn OFF and power will be removed from the load.

Normally closed contacts

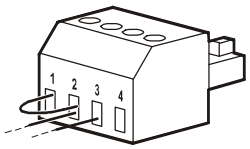

1. If the EPO switch or relay contacts are normally closed, insert the wires from the switch or contacts at pins 2 and 3 of the EPO terminal block. Use 16-28 AWG wire.
2. Insert a wire jumper between pins 1 and 2. Secure the wires by tightening the three screws at positions 1, 2, and 3.

If the contacts are opened, the UPS will turn OFF and power will be removed from the load.

Note: Pin 1 is the power source for the EPO circuit, it provides a few milliampere of 24 V power.

If the normally closed (NC) EPO configuration is used, the EPO switch or relay should be rated for “dry” circuit applications, the rating should be for low voltage and low current applications. This normally implies the contacts are gold plated.

The EPO interface is a Safety Extra Low Voltage (SELV) circuit. Connect the EPO interface only to other SELV circuits. The EPO interface monitors circuits that have no determined voltage potential. SELV circuits are controlled by a switch or relay properly isolated from mains power. To avoid damage to the UPS, do not connect the EPO interface to any circuit other than a SELV circuit.

Use one of the following cable types to connect the UPS to the EPO switch.

- CL2: Class 2 cable for general use.
- CL2P: Plenum cable for use in ducts, plenums, and other spaces used for environmental air.
- CL2R: Riser cable for use in a vertical run in a floor to floor shaft.
- CLEX: Limited use cable for use in dwellings and for use in raceways.
- Installation in Canada: Use only CSA certified, type ELC, (extra low voltage control cable).
- Installation in countries other than Canada and the USA: Use standard low voltage cable in accordance with national and local regulations.

Install a Ferrite Bead

The supplied ferrite bead must be installed between the supplied EPO terminal block and the EPO switch.

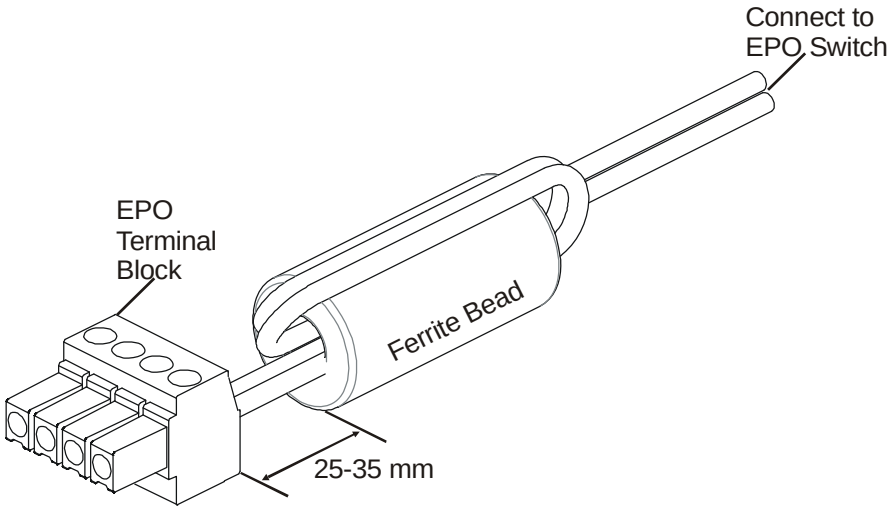

Network Management Interface

Introduction

The UPS has a network port and console port that can be used to access the Network Management Interface. The Network Management Interface is very similar to an AP9630 Network Management Card (NMC) that is integrated into a UPS with one universal input/output port.

The Network Management Interface and the AP9630 NMC have the same firmware, operation modes and interaction with other APC products such as PowerChute Network Shutdown.

Refer to the Network Management Card utility CD supplied with this product.

Features

The Network Management Interface allows the UPS to function as a web based, IPv6 ready product. The Network Management Interface can manage the UPS using multiple open standards such as:

Hypertext Transfer Protocol (HTTP)	Secure SHell (SSH)
Simple Network Management Protocol versions 1 and 3 (SNMPv1, SNMPv3)	Hypertext Transfer Protocol over Secure Sockets layer (HTTPS)
File Transfer Protocol (FTP)	Secure Copy (SCP)
Telnet	Syslog
RADIUS	

The Network Management Interface:

- Provides UPS control and **Self Test** scheduling features.
- Provides data and event logs.
- Enables you to set up notifications through event logging, e-mail, and SNMP traps.
- Provides support for PowerChute Network Shutdown.
- Supports using a Dynamic Host Configuration Protocol (DHCP) or BOOTstrap Protocol (BOOTP) server to provide the network (TCP/IP) values.
- Supports use of Remote Monitoring Service (RMS).
- Provides the ability to export a user configuration (.ini) file from a configured UPS, to one or more unconfigured UPS without conversion to a binary file.
- Provides a selection of security protocols for authentication and encryption.
- Communicates with StruxureWare Central and InfraStruxure Manager.
- Supports one universal input/output port for connection to a:
  - Temperature probe, AP9335T (supplied)
  - Temperature/humidity sensor, AP335TH (optional)
  - Relay input/output connector that supports two input contacts and one output relay, AP9810 Dry Contact I/O Accessory (optional)

Related Documents

The Network Management Card Utility CD contains the following documentation:

- UPS Network Management Card 2 User's Guide
- Network Management Card Upgrade Utilities
- Security Handbook
- PowerNet Management Information Base (MIB) Reference Guide

IP Address Configuration

The default TCP/IP configuration setting DHCP, assumes that a properly configured DHCP server is available to provide TCP/IP settings to the Network Management Interface.

If the Network Management Interface obtains an IPv4 address from a DHCP server, use the UPS Display Interface menus About/Interface, to see the address.

To setup a static IPv4 address use the UPS Display Interface Config menu. Set the IP address Subnet Mask and Gateway from the Config menu.

See the User's Guide on the Network Management Card Utility CD for user information about the Network Management Interface and for setup instructions.

Smart Battery Management

Definitions

- Battery Module: A string of battery cells arranged to produce a battery assembly with a connector.
- Replaceable Battery Cartridge (RBC): An APC battery cartridge consisting of two battery modules. Replacement RBCs can be ordered from the APC web site, **www.apc.com**.
- Smart External Battery Pack (XLBP): An enclosure that contains RBC(s) and battery management electronics.
- User Interface (UI): Any interface by which a user can interact with the system. This may include a UPS display interface, a network management interface or PowerChute™ Network Shutdown software.

NOTE: Do not use a battery that is not APC approved.
The system will not detect the presence of a non APC approved battery and may adversely affect the operation of the system.
Use of a non APC approved battery will void the manufacturer warranty.

Features

Smart Battery Management provides the following features:

- Monitors and informs the user of the health of each RBC.
- Monitors and shows on the UPS Display Interface screen, the date for the end of useful life for each RBC.
- The UPS emits an alarm and shows a message on the UPS Display Interface screen to indicate the estimated battery end of life. On the UPS Display Interface screen the user can set the number of days before the alarm is heard and the message appears on the UPS Display Interface screen.
- Automatically detects the addition or removal of XLBPs and RBCs.
- Monitors the internal temperature of each XLBP and automatically adjusts the battery charging.

Maintenance

- **RBC maintenance:** The APC RBC uses sealed lead acid battery cells and does not require maintenance.
- **Runtime Test (Calibration):** This should be performed anytime the steady state load is changed significantly, for example a new server is added to or removed from the UPS load.
- **Battery health monitoring:** The battery energy output and voltage are monitored to assess the health of the installed batteries when the UPS is operating on battery.
  Battery health monitoring is done during a UPS **Self Test**, a **Runtime Calibration Test**, and when the UPS is operating on battery power.
  The UPS can be configured to perform periodic, automatic **Self Tests**.

End of useful life

- **Near end of life notification:** A warning message will appear on the UPS display interface screen when each RBC is approaching the end of its useful life. For configuration details refer to **Replacement Notification Time** and **Replacement Battery Alarm Time**.
  The estimated replacement date for each RBC is available through the UI.
- **Needs replacement notification:** The UPS display interface screen shows when RBC replacement is required. The RBC must be replaced as soon as possible.
  When an RBC requires replacement, the UPS display interface may recommend that additional RBCs be replaced if they will soon reach the end of their useful life.

CAUTION: Continued operation after end of useful life notification may cause damage to the batteries.

- **Recycling:** Remove the RBC from the XLBP. Recycle the RBC. Do not disassemble an RBC.

Replace the RBCs in a UPS

An RBC should only be disconnected or removed from the UPS temporarily as part of the battery replacement procedure.

- Disconnect all connected battery modules in the UPS. Slide the RBCs out of the UPS.
- Slide the new RBCs into the UPS and connect the battery modules to the UPS.
- Securely connect each battery module. Press the battery connector into the UPS until it is firmly connected.
  A battery that is not fully connected will cause erratic UPS operation, abnormal error messages and connected equipment may not receive battery power during power outages.
- After installing the RBC, the UPS display interface may prompt the user to verify the status of the replaced battery modules. If the battery module is new, respond YES. If the battery module is not new, respond NO.

Recommended actions after installing new RBCs

- Verify that the UPS is connected to input power and the output power is turned on. Refer to the *Operation* section in this manual for instructions.
- Verify that the UPS load is greater than 400 watts. This will appear on the UPS display interface screen.
- Perform a UPS **Self Test**.
- Verify on the UPS display interface that the installation dates for the replaced RBCs are set to the current date.
  The installation dates can be changed manually on the UPS display interface.
  If all RBCs have been replaced at the same time, all installation dates can be changed simultaneously.
  For configuration details refer to **Battery Install Date** on page 19 of this manual.
- Allow the system to charge for 24 hours to ensure full runtime capability.

XLBP installation and replacement

Refer to the External Battery Pack Installation Guide for installation and replacement instructions.

Troubleshooting

Use the table below to solve minor installation and operation problems.
Refer to the APC web site, www.apc.com for assistance with complex UPS problems.
The UPS features firmware that can be upgraded.
Go to the APC web site, www.apc.com/Support, or contact your local Customer Care Center for more information.

Problem and Possible Cause	Solution
UPS will not turn on or there is no output	
The UPS is not connected to mains power.	Be sure the power cable is securely connected to the UPS and to the mains power supply.
The UPS display interface screen shows very low or no mains power.	Check the mains power supply to verify acceptable power quality.
There is an internal UPS alert or warning.	The UPS Display Interface screen will show a message to identify the alert or warning and corrective action.
UPS emits an audible alarm	
Normal UPS operation when running on battery power.	The UPS is operating on battery power. Refer to the status of the UPS as shown on the UPS Display Interface screen. Press any key to mute all alarms.
The UPS emits an audible alarm and has a red or amber back light on the UPS Display Interface screen.	An **Alarm** or **Warning** condition exists. Refer to the display interface screen for information.
UPS does not provide expected backup time	
The UPS batteries are weak due to a recent power outage or they are near the end of service life.	Charge the batteries. Batteries require recharging after extended outages and wear out faster when put into service often or when operated at elevated temperatures. If the batteries are near the end of service life, consider replacing the batteries even if the **Replace Battery** message is not displayed.
The UPS is experiencing an overload condition.	The connected equipment exceeds the specified maximum load. Refer to the APC web site, **www.apc.com** for product specifications. The UPS will emit a sustained audible alarm until the overload condition is corrected. Disconnect nonessential equipment from the UPS to correct the overload condition.

Problem and Possible Cause	Solution
UPS operates on battery power while connected to mains power	
The input circuit breaker has tripped.	Reduce the load on the UPS. Disconnect nonessential equipment and reset the circuit breaker. Check the circuit breaker rating for the connected equipment.
There is very high, very low, or distorted input line voltage.	Navigate to the UPS Display Interface screen that shows input voltage. Verify that the input voltage is within specified operating limits. If no input voltage is indicated on the UPS Display Interface screen, contact Customer Support through the APC web site, **www.apc.com.**
The UPS Display Interface screen shows the message **Waiting for Minimum Runtime**.	The UPS has been configured to operate for a specified period of runtime. The setting can be changed through the Config/UPS menus.
UPS Display Interface Status screen shows Overload and the UPS emits a sustained audible alarm	
The UPS is experiencing an overload condition.	The connected equipment exceeds the maximum load rating for the UPS. The UPS will emit a sustained audible alarm until the overload condition is corrected. Disconnect nonessential equipment from the UPS to correct the overload condition.
UPS Display Interface Status screen shows UPS is operating in Bypass mode	
The UPS received a command to operate in **Bypass** mode	No action is required.
The UPS has automatically switched to **Bypass** mode due to an internal UPS alert or warning.	The UPS Display Interface screen will show a message to identify the alert or warning and corrective action.
UPS Display Interface is red or amber and shows an alert or warning message **The UPS emits a sustained audible alarm**	
The UPS has detected a problem during normal operation.	Follow the instructions on the UPS Display Interface screen. Press any key to mute all alarms.
The UPS Display Interface screen shows the message **Disconnected Battery**.	Be sure the battery cables are securely connected. Perform a UPS **Self Test** to be sure the UPS detects all connected batteries. To perform a UPS **Self Test** use the UPS Display Interface menu option **Test and Diagnostics.**
The UPS Display Interface screen shows the message **Replace Battery**.	Allow the battery to recharge for 24 hours. To perform a **Runtime** test use the UPS Display Interface menu option **Test and Diagnostics.** If the problem persists, replace all of the batteries.

Problem and Possible Cause	Solution
The UPS display turns red or amber, displays an alert message, and emits a sustained audible alarm **Red illumination indicates a UPS alarm that requires immediate attention** **Amber illumination indicates a UPS alarm that requires attention**	
There is an internal UPS alert or warning. 	Do not attempt to use the UPS. Turn the UPS off and have it serviced immediately.
The UPS is experiencing an overload condition. 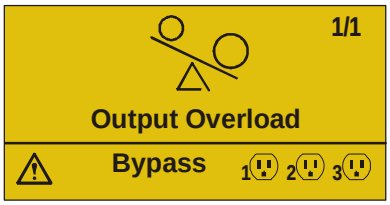 	Reduce the load on the UPS. Disconnect nonessential equipment.
The Replace Battery alert is displayed	
The battery has a weak charge.	Allow the battery to recharge for at least four hours. Then, perform a UPS **Self Test**. If the problem persists after recharging, replace the battery.
The replacement battery is not properly connected.	Be sure the battery cable is securely connected.
UPS reports; Battery Sys Error 0800 or Needs Firmware Update	
UPS reports; Battery Sys Error 0800 or Needs Firmware Update	The UPS system firmware must be updated to correct this problem. To update the UPS system firmware go to **www.apc.com/support**. Select **Search the Knowledge Base** and search for **FA164737**. Follow the instructions to upgrade the firmware.

Transport

1. Shut down and disconnect all connected equipment.
2. Disconnect the unit from mains power.
3. Disconnect all internal and external batteries (if applicable).
4. Follow the shipping instructions outlined in the *Service* section of this manual.

Service

If the unit requires service, do not return it to the dealer. Follow these steps:

1. Review the *Troubleshooting* section of the manual to eliminate common problems.
2. If the problem persists, contact APC Customer Support through the APC web site, **www.apc.com**.
   a. Note the model number and serial number and the date of purchase. The model and serial numbers are located on the rear panel of the unit and are available through the LCD display on select models.
   b. Call APC Support and a technician will attempt to solve the problem over the phone. If this is not possible, the technician will issue a Returned Material Authorization Number (RMA#).
   c. If the unit is under warranty, the repairs are free.
   d. Service procedures and returns may vary internationally. Refer to the APC web site for country specific instructions.
3. Pack the unit properly to avoid damage in transit. Never use foam beads for packaging. Damage sustained in transit is not covered under warranty.
4. **Before shipping, always disconnect all battery modules in a UPS or external battery pack.**
5. Write the RMA# provided by Customer Support on the outside of the package.
6. Return the unit by insured, prepaid carrier to the address provided by Customer Support.

Limited Factory Warranty

Schneider Electric IT Corporation (SEIT), warrants its products to be free from defects in materials and workmanship for a period of three (3) years excluding the batteries, which are warranted for two (2) years from the date of purchase. The SEIT obligation under this warranty is limited to repairing or replacing, at its own sole option, any such defective products. Repair or replacement of a defective product or part thereof does not extend the original warranty period.

This warranty applies only to the original purchaser who must have properly registered the product within 10 days of purchase. Products may be registered online at warranty.apc.com.

SEIT shall not be liable under the warranty if its testing and examination disclose that the alleged defect in the product does not exist or was caused by end user or any third person misuse, negligence, improper installation, testing, operation or use of the product contrary to SEIT recommendations of specifications. Further, SEIT shall not be liable for defects resulting from: 1) unauthorized attempts to repair or modify the product, 2) incorrect or inadequate electrical voltage or connection, 3) inappropriate on site operation conditions, 4) Acts of God, 5) exposure to the elements, or 6) theft. In no event shall SEIT have any liability under this warranty for any product where the serial number has been altered, defaced, or removed.

EXCEPT AS SET FORTH ABOVE, THERE ARE NO WARRANTIES, EXPRESS OR IMPLIED, BY OPERATION OF LAW OR OTHERWISE, APPLICABLE TO PRODUCTS SOLD, SERVICED OR FURNISHED UNDER THIS AGREEMENT OR IN CONNECTION HEREWITH.

SEIT DISCLAIMS ALL IMPLIED WARRANTIES OF MERCHANTABILITY, SATISFACTION AND FITNESS FOR A PARTICULAR PURPOSE.

SEIT EXPRESS WARRANTIES WILL NOT BE ENLARGED, DIMINISHED, OR AFFECTED BY AND NO OBLIGATION OR LIABILITY WILL ARISE OUT OF, SEIT RENDERING OF TECHNICAL OR OTHER ADVICE OR SERVICE IN CONNECTION WITH THE PRODUCTS.

THE FOREGOING WARRANTIES AND REMEDIES ARE EXCLUSIVE AND IN LIEU OF ALL OTHER WARRANTIES AND REMEDIES. THE WARRANTIES SET FORTH ABOVE CONSTITUTE SEIT'S SOLE LIABILITY AND PURCHASER EXCLUSIVE REMEDY FOR ANY BREACH OF SUCH WARRANTIES. SEIT WARRANTIES EXTEND ONLY TO ORIGINAL PURCHASER AND ARE NOT EXTENDED TO ANY THIRD PARTIES.

IN NO EVENT SHALL SEIT, ITS OFFICERS, DIRECTORS, AFFILIATES OR EMPLOYEES BE LIABLE FOR ANY FORM OF INDIRECT, SPECIAL, CONSEQUENTIAL OR PUNITIVE DAMAGES, ARISING OUT OF THE USE, SERVICE OR INSTALLATION OF THE PRODUCTS, WHETHER SUCH DAMAGES ARISE IN CONTRACT OR TORT, IRRESPECTIVE OF FAULT, NEGLIGENCE OR STRICT LIABILITY OR WHETHER SEIT HAS BEEN ADVISED IN ADVANCE OF THE POSSIBILITY OF SUCH DAMAGES. SPECIFICALLY, SEIT IS NOT LIABLE FOR ANY COSTS, SUCH AS LOST PROFITS OR REVENUE, WHETHER DIRECT OR INDIRECT, LOSS OF EQUIPMENT, LOSS OF USE OF EQUIPMENT, LOSS OF SOFTWARE, LOSS OF DATA, COSTS OF SUBSTITUANTS, CLAIMS BY THIRD PARTIES, OR OTHERWISE.

NOTHING IN THIS LIMITED WARRANTY SHALL SEEK TO EXCLUDE OR LIMIT OR DEATH OR PERSONAL INJURY RESULTING FROM ITS NEGLIGENCE OR ITS FRAUDULENT MISREPRESENTATION OF TO THE EXTENT THAT IT CANNOT BE EXCLUDED OR LIMITED BY APPLICABLE LAW.

To obtain service under warranty you must obtain a Returned Material Authorization (RMA) number from customer support. Customers with warranty claims issues may access the SEIT worldwide customer support network through the APC web site: **www.apc.com**. Select your country from the country selection drop down menu. Open the Support tab at the top of the web page to obtain information for customer support in your region. Products must be returned with transportation charges prepaid and must be accompanied by a brief description of the problem encountered and proof of date and place of purchase.

APC™ by Schneider Electric
Worldwide Customer Support

Customer support for this or any other APC™ by Schneider Electric product is available at no charge in any of the following ways:

- Visit the APC web site to access documents in the APC by Schneider Electric Knowledge Base and to submit customer support requests.
  - **www.apc.com** (Corporate Headquarters)
    Connect to localized APC web site for specific countries, each of which provides customer support information.
  - **www.apc.com/support/**
    Global support searching APC by Schneider Electric Knowledge Base and using e-support.
- Contact the APC by Schneider Electric Customer Support Center by telephone or e-mail.
  - Local, country specific centers: go to **www.apc.com/support/contact** for contact information.
  - For information on how to obtain local customer support, contact the APC by Schneider Electric representative or other distributor from whom you purchased your APC by Schneider Electric product.

© 2015 APC by Schneider Electric. APC, the APC logo, PowerChute, and Smart-UPS are owned by Schneider Electric Industries S.A.S. or their affiliated companies. All other trademarks are property of their respective owners.