# Galaxy VS

## Wall-Mounted Maintenance Bypass Panel

## Installation

**GVSBPSU10K20H, GVSBPSU20K60H, GVSBPSU80K120H**

**6/2019**

www.schneider-electric.com

# Legal Information

The Schneider Electric brand and any trademarks of Schneider Electric SE and its subsidiaries referred to in this guide are the property of Schneider Electric SE or its subsidiaries. All other brands may be trademarks of their respective owners.

This guide and its content are protected under applicable copyright laws and furnished for informational use only. No part of this guide may be reproduced or transmitted in any form or by any means (electronic, mechanical, photocopying, recording, or otherwise), for any purpose, without the prior written permission of Schneider Electric.

Schneider Electric does not grant any right or license for commercial use of the guide or its content, except for a non-exclusive and personal license to consult it on an "as is" basis. Schneider Electric products and equipment should be installed, operated, serviced, and maintained only by qualified personnel.

As standards, specifications, and designs change from time to time, information contained in this guide may be subject to change without notice.

To the extent permitted by applicable law, no responsibility or liability is assumed by Schneider Electric and its subsidiaries for any errors or omissions in the informational content of this material or consequences arising out of or resulting from the use of the information contained herein.

Go to
*https://www.productinfo.schneider-electric.com/portals/ui/galaxyvs_iec/*
or scan the QR code above for digital experience and translated manuals.

# Table of Contents

Important Safety Instructions — SAVE THESE INSTRUCTIONS ..... 5
Electromagnetic Compatibility ..... 6
Safety Precautions ..... 6
Additional Safety Precautions After Installation ..... 8
Electrical Safety ..... 8
Specifications ..... 9
Recommended Upstream Protection ..... 9
Recommended Cable Sizes ..... 9
Torque Specifications ..... 9
Maintenance Bypass Panel Weights and Dimensions ..... 9
Clearance ..... 10
Environment ..... 10
One Line Diagrams ..... 11
Installation Procedure ..... 13
Mount the Maintenance Bypass Panel to the Wall ..... 14
Prepare the Maintenance Bypass Panel for Cables ..... 16
Remove the Neutral Jumper (Option) ..... 17
Connect the Power Cables ..... 18
Connect the Signal Cables for Single System ..... 21
Connect the Signal Cables for Simplified 1+1 Parallel System ..... 24
Add Translated Safety Labels to Your Product ..... 31
Final Installation ..... 32

# Important Safety Instructions — SAVE THESE INSTRUCTIONS

Read these instructions carefully and look at the equipment to become familiar with it before trying to install, operate, service or maintain it. The following safety messages may appear throughout this manual or on the equipment to warn of potential hazards or to call attention to information that clarifies or simplifies a procedure.

The addition of this symbol to a “Danger” or “Warning” safety message indicates that an electrical hazard exists which will result in personal injury if the instructions are not followed.

This is the safety alert symbol. It is used to alert you to potential personal injury hazards. Obey all safety messages with this symbol to avoid possible injury or death.

**⚠ DANGER**

**DANGER** indicates a hazardous situation which, if not avoided, **will result in** death or serious injury.

**Failure to follow these instructions will result in death or serious injury.**

**⚠ WARNING**

**WARNING** indicates a hazardous situation which, if not avoided, **could result in** death or serious injury.

**Failure to follow these instructions can result in death, serious injury, or equipment damage.**

**⚠ CAUTION**

**CAUTION** indicates a hazardous situation which, if not avoided, **could result in** minor or moderate injury.

**Failure to follow these instructions can result in injury or equipment damage.**

***NOTICE***

**NOTICE** is used to address practices not related to physical injury. The safety alert symbol shall not be used with this type of safety message.

**Failure to follow these instructions can result in equipment damage.**

## Please Note

Electrical equipment should only be installed, operated, serviced, and maintained by qualified personnel. No responsibility is assumed by Schneider Electric for any consequences arising out of the use of this material.

A qualified person is one who has skills and knowledge related to the construction, installation, and operation of electrical equipment and has received safety training to recognize and avoid the hazards involved.

## Electromagnetic Compatibility

**NOTICE**

**RISK OF ELECTROMAGNETIC DISTURBANCE**

This is a product category C2 UPS product. In a residential environment, this product may cause radio inference, in which case the user may be required to take additional measures.

**Failure to follow these instructions can result in equipment damage.**

## Safety Precautions

**DANGER**

**HAZARD OF ELECTRIC SHOCK, EXPLOSION, OR ARC FLASH**

Read all instructions in the installation manual before installing or working on this product.

**Failure to follow these instructions will result in death or serious injury.**

**DANGER**

**HAZARD OF ELECTRIC SHOCK, EXPLOSION, OR ARC FLASH**

Do not install the product until all construction work has been completed and the installation room has been cleaned.

**Failure to follow these instructions will result in death or serious injury.**

**DANGER**

**HAZARD OF ELECTRIC SHOCK, EXPLOSION, OR ARC FLASH**

The product must be installed according to the specifications and requirements as defined by Schneider Electric. It concerns in particular the external and internal protections (upstream breakers, battery breakers, cabling, etc.) and environmental requirements. No responsibility is assumed by Schneider Electric if these requirements are not respected.

**Failure to follow these instructions will result in death or serious injury.**

**DANGER**

**HAZARD OF ELECTRIC SHOCK, EXPLOSION, OR ARC FLASH**

The UPS system must be installed according to local and national regulations. Install the UPS according to:

- IEC 60364 (including 60364–4–41- protection against electric shock, 60364–4–42 - protection against thermal effect, and 60364–4–43 - protection against overcurrent), **or**
- NEC NFPA 70, **or**
- Canadian Electrical Code (C22.1, Part 1)

depending on which one of the standards apply in your local area.

**Failure to follow these instructions will result in death or serious injury.**

**DANGER**

**HAZARD OF ELECTRIC SHOCK, EXPLOSION, OR ARC FLASH**

- Install the product in a temperature controlled indoor environment free of conductive contaminants and humidity.
- Install the product on a non-flammable, level and solid surface (e.g. concrete) that can support the weight of the system.

**Failure to follow these instructions will result in death or serious injury.**

**DANGER**

**HAZARD OF ELECTRIC SHOCK, EXPLOSION, OR ARC FLASH**

The product is not designed for and must therefore not be installed in the following unusual operating environments:

- Damaging fumes
- Explosive mixtures of dust or gases, corrosive gases, or conductive or radiant heat from other sources
- Moisture, abrasive dust, steam or in an excessively damp environment
- Fungus, insects, vermin
- Salt-laden air or contaminated cooling refrigerant
- Pollution degree higher than 2 according to IEC 60664-1
- Exposure to abnormal vibrations, shocks, and tilting
- Exposure to direct sunlight, heat sources, or strong electromagnetic fields

**Failure to follow these instructions will result in death or serious injury.**

**DANGER**

**HAZARD OF ELECTRIC SHOCK, EXPLOSION, OR ARC FLASH**

Do not drill or cut holes for cables or conduits with the gland plates installed and do not drill or cut holes in close proximity to the UPS.

**Failure to follow these instructions will result in death or serious injury.**

**WARNING**

**HAZARD OF ARC FLASH**

Do not make mechanical changes to the product (including removal of cabinet parts or drilling/cutting of holes) that are not described in the installation manual.

**Failure to follow these instructions can result in death, serious injury, or equipment damage.**

***NOTICE***

**RISK OF OVERHEATING**

Respect the space requirements around the product and do not cover the ventilation openings when the product is in operation.

**Failure to follow these instructions can result in equipment damage.**

## Additional Safety Precautions After Installation

**⚠⚠DANGER**

**HAZARD OF ELECTRIC SHOCK, EXPLOSION, OR ARC FLASH**

Do not install the UPS system until all construction work has been completed and the installation room has been cleaned. If additional construction work is needed in the installation room after this product has been installed, turn off the product and cover the product with the protective packaging bag the product was delivered in.

**Failure to follow these instructions will result in death or serious injury.**

## Electrical Safety

This manual contains important safety instructions that should be followed during the installation and maintenance of the UPS system.

**⚠⚠DANGER**

**HAZARD OF ELECTRIC SHOCK, EXPLOSION, OR ARC FLASH**

- Electrical equipment must be installed, operated, serviced, and maintained only by qualified personnel.
- Apply appropriate personal protective equipment (PPE) and follow safe electrical work practices.
- Disconnection devices for AC and DC must be provided by others, be readily accessible, and the function of the disconnect device marked for its function.
- Turn off all power supplying the UPS system before working on or inside the equipment.
- Before working on the UPS system, check for hazardous voltage between all terminals including the protective earth.
- The UPS contains an internal energy source. Hazardous voltage can be present even when disconnected from the mains supply. Before installing or servicing the UPS system, ensure that the units are OFF and that mains and batteries are disconnected. Wait five minutes before opening the UPS to allow the capacitors to discharge.
- The UPS must be properly earthed/grounded and due to a high leakage current, the earthing/grounding conductor must be connected first.

**Failure to follow these instructions will result in death or serious injury.**

When the UPS input is connected through external isolators that, when opened, isolate the neutral or when the automatic backfeed isolation is provided external to the equipment or is connected to an IT power distribution system, a label must be fitted at the UPS input terminals, and on all primary power isolators installed remotely from the UPS area and on external access points between such isolators and the UPS, by the user, displaying the following text (or equivalent in a language which is acceptable in the country in which the UPS system is installed):

**⚠⚠DANGER**

**HAZARD OF ELECTRIC SHOCK, EXPLOSION, OR ARC FLASH**

Risk of voltage backfeed. Before working on this circuit: Isolate the UPS and check for hazardous voltage between all terminals including the protective earth.

**Failure to follow these instructions will result in death or serious injury.**

# Specifications

**NOTE:** Maximum short circuit rating: 10 kA RMS symmetrical.

**NOTE:** GVSBPSU80K120H can support a load of up to 120 kW/kVA as long as the neutral current (250 A) is not exceeded:

- at 380 V, the maximum neutral current capability is reached with a 95 kVA non-linear load.
- at 400 V, the maximum neutral current capability is reached with a 100 kVA non-linear load.

## Recommended Upstream Protection

Refer to the UPS installation manual for recommended upstream protection.

## Recommended Cable Sizes

**⚠ DANGER**

**HAZARD OF ELECTRIC SHOCK, EXPLOSION, OR ARC FLASH**

All wiring must comply with all applicable national and/or electrical codes. The maximum allowable cable size is 16 $mm^2$ for GVSBPSU10K20H, 70 $mm^2$ for GVSBPSU20K60H, and 150 $mm^2$ for GVSBPSU80K120H.

**Failure to follow these instructions will result in death or serious injury.**

**NOTE:** Aluminum cables are not supported in a 80-100 kW simplified 1+1 parallel systems.

Refer to the UPS installation manual for recommended cable sizes.

## Torque Specifications

| Bolt size | Torque |
|---|---|
| M4 | 1.7 Nm |
| M5 | 2.2 Nm |
| M6 | 5 Nm |
| M8 | 17.5 Nm |
| M10 | 30 Nm |

## Maintenance Bypass Panel Weights and Dimensions

| Commercial reference | Weight kg | Height mm | Width mm | Depth mm |
|---|---|---|---|---|
| GVSBPSU10K20H | 12 | 450 | 400 | 150 |
| GVSBPSU20K60H | 25 | 600 | 550 | 220 |
| GVSBPSU80K120H | 40 | 800 | 600 | 280 |

# Clearance

**NOTE:** Clearance dimensions are published for airflow and service access only. Consult with the local safety codes and standards for additional requirements in your local area.

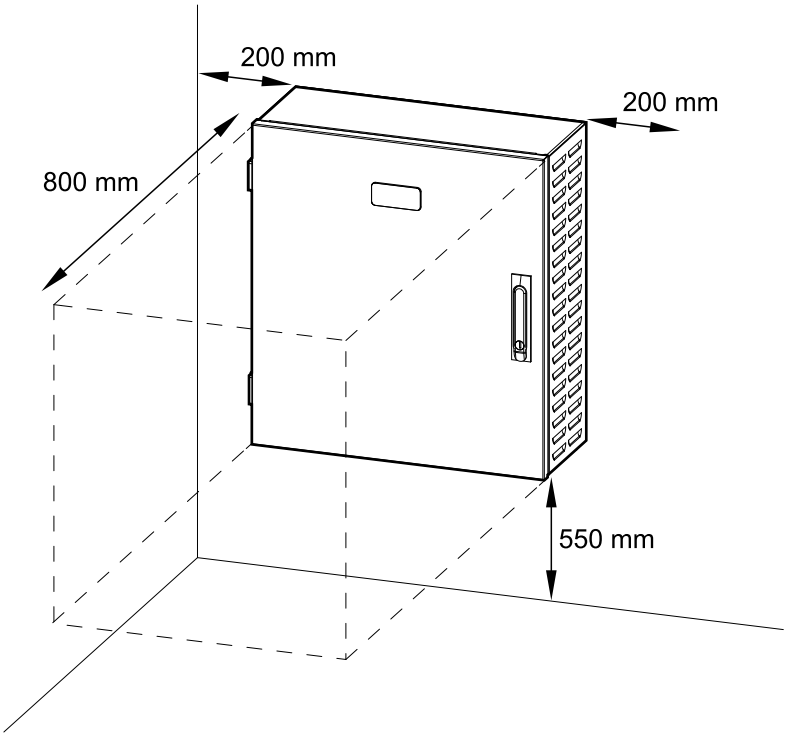


# Environment

| | Operating | Storage |
|---|---|---|
| Temperature | 0 °C to 40 °C | -25 °C to 55 °C |
| Relative humidity | 0 – 95% non-condensing | 0 – 95% non-condensing |
| Elevation | 0-3000 m | |
| Protection class | IP20 | |
| Color | RAL 9003, gloss level 85% | |

# One Line Diagrams

| | |
|---|---|
| UIB | Unit input breaker |
| SSIB | Static switch input breaker |
| MBB | Maintenance bypass breaker |
| IMB | Internal maintenance breaker |
| UOB | Unit output breaker |
| SIB | System isolation breaker |

**NOTE:** The internal maintenance breaker IMB* in the UPS cannot be used in a system with an maintenance bypass panel and the internal maintenance breaker IMB* must be padlocked in the open position.

## Single System – Single Mains

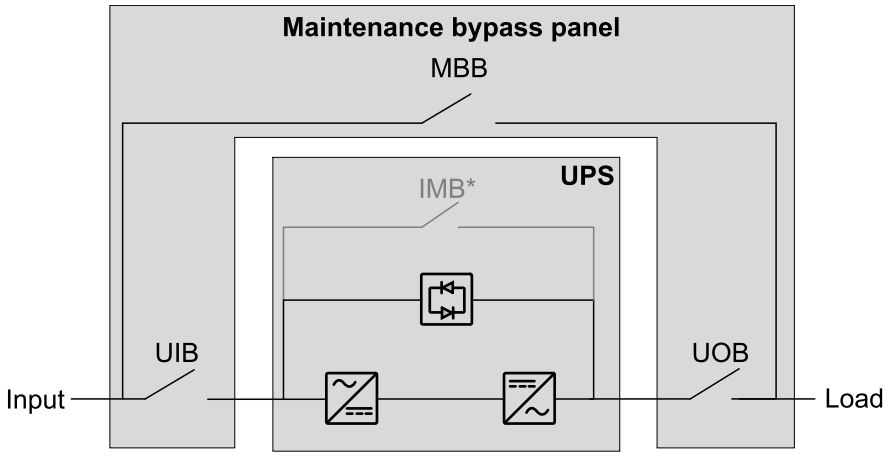


## Single System – Dual Mains

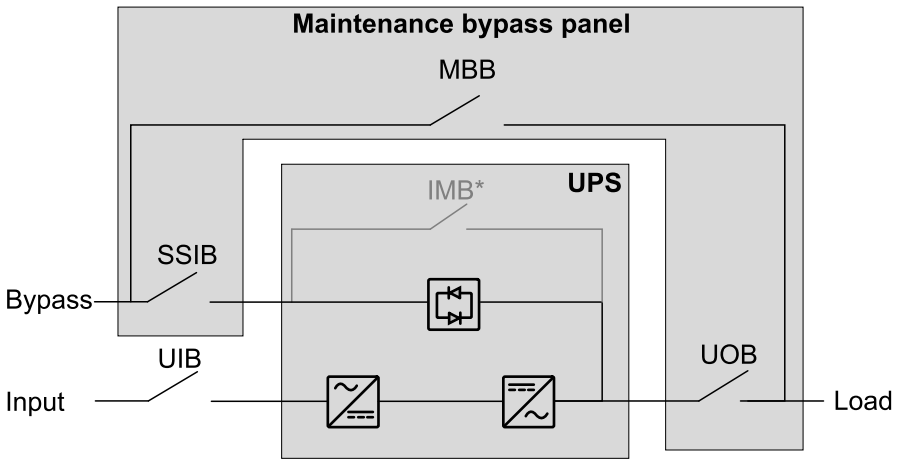

## Simplified 1+1 Parallel System – Single Mains

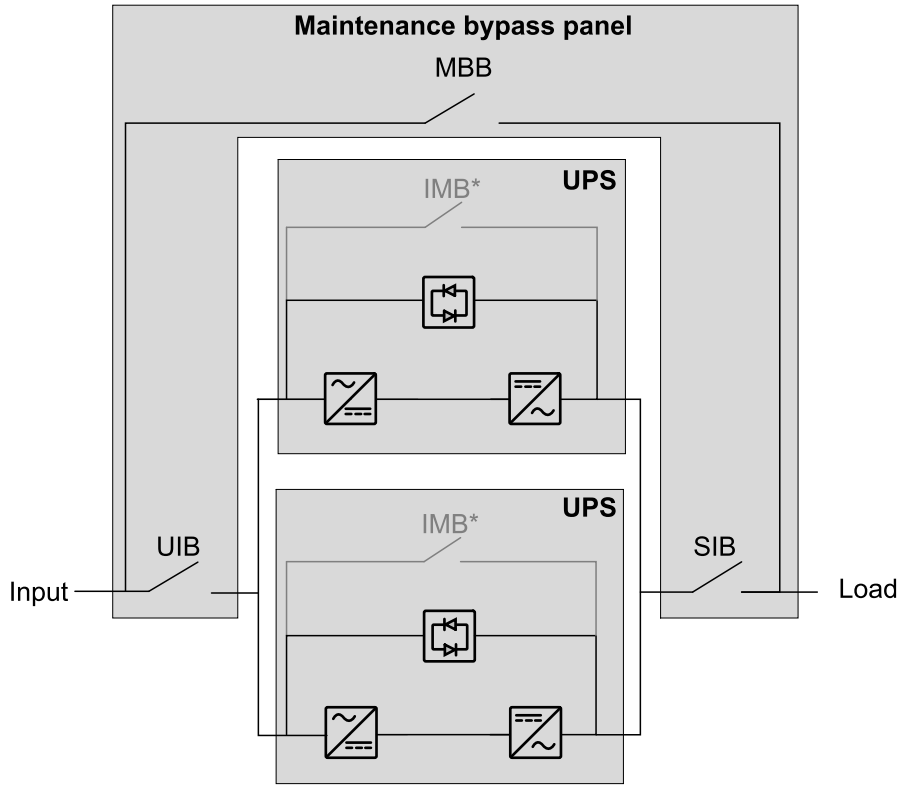


## Simplified 1+1 Parallel System – Dual Mains

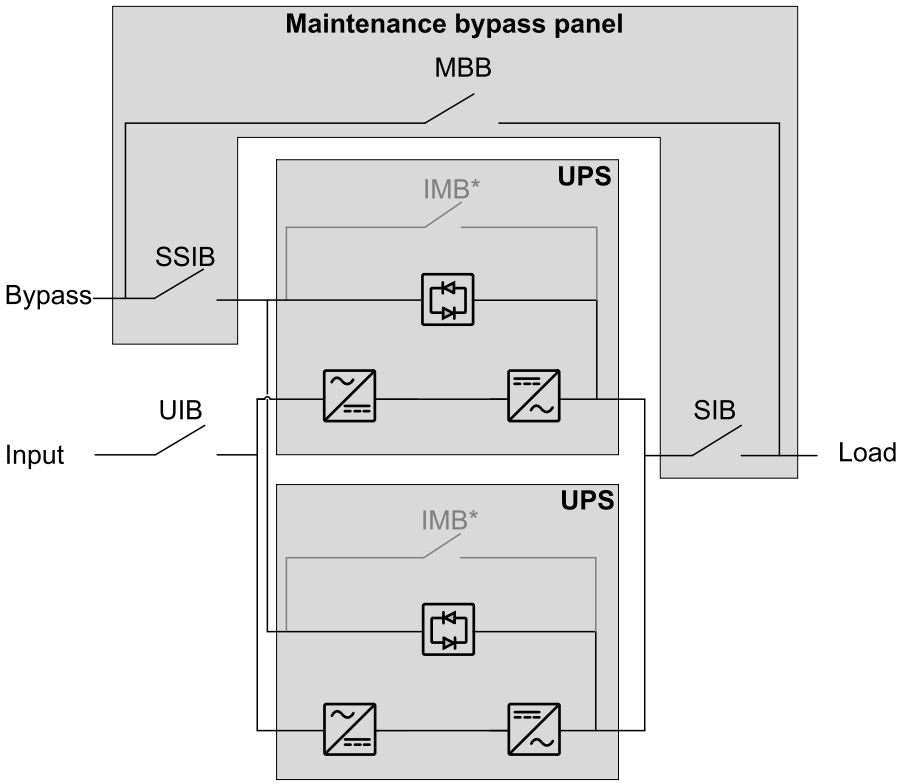

# Installation Procedure

**Single System – Single Mains**

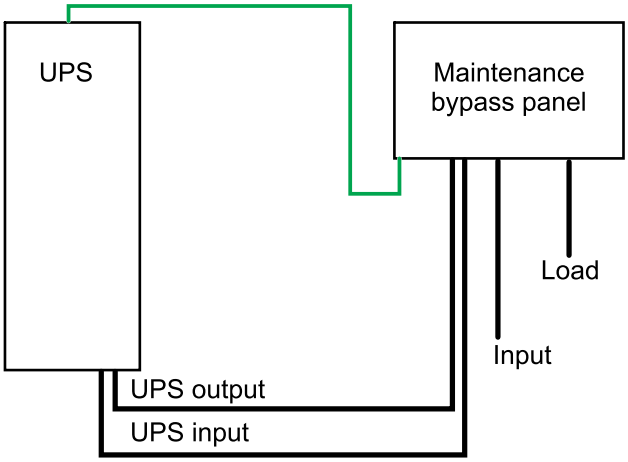


**Single System – Dual Mains**

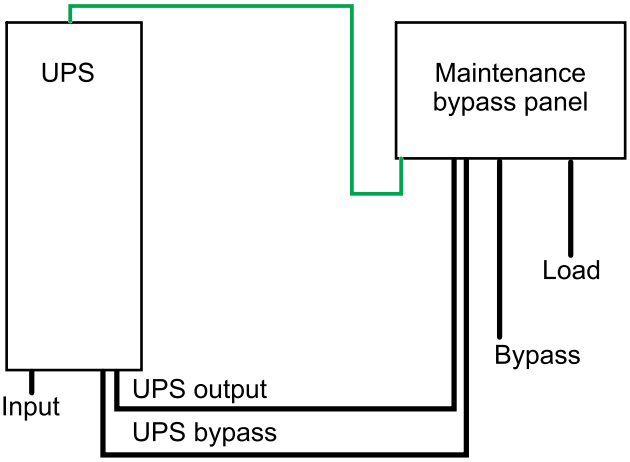


**Simplified 1+1 Parallel System – Single Mains**

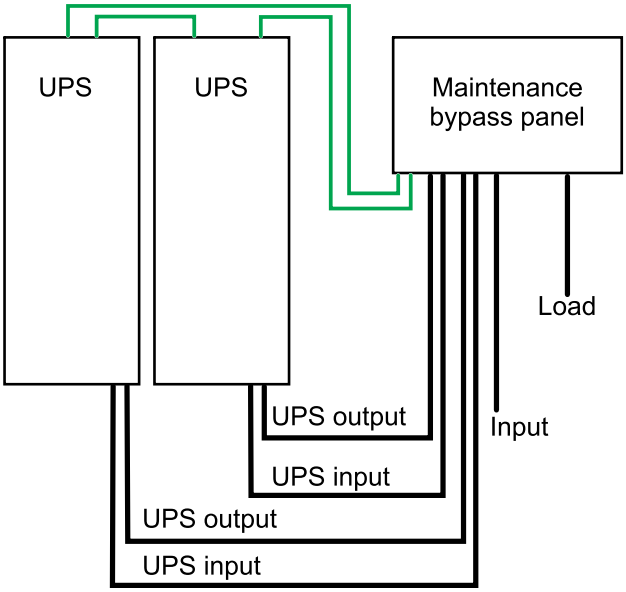


**Simplified 1+1 Parallel System – Dual Mains**

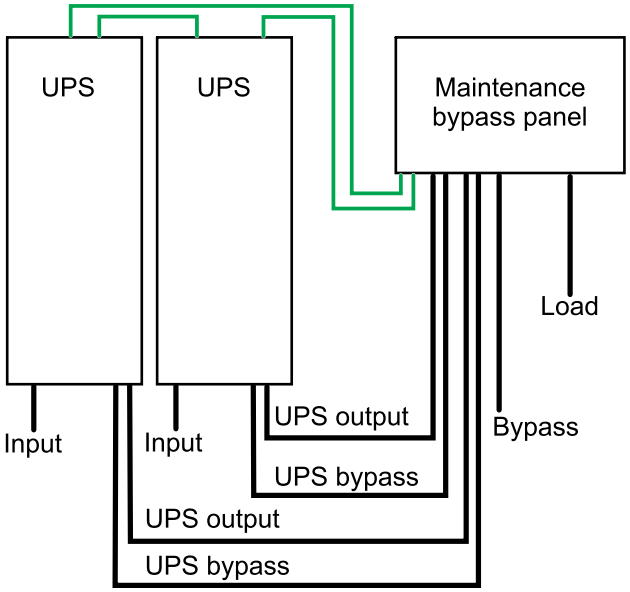


Signal cable
Power cable

1. *Mount the Maintenance Bypass Panel to the Wall, page 14*.
2. *Prepare the Maintenance Bypass Panel for Cables, page 16*.
3. Only in countries where required: *Remove the Neutral Jumper (Option), page 17*.
4. *Connect the Power Cables, page 18*.
5. Do one of the following:
   – *Connect the Signal Cables for Single System, page 21*, or
   – *Connect the Signal Cables for Simplified 1+1 Parallel System, page 24*.
6. *Add Translated Safety Labels to Your Product, page 31*.
7. *Final Installation, page 32*.

# Mount the Maintenance Bypass Panel to the Wall

**⚠ CAUTION**

**RISK OF INJURY OR EQUIPMENT DAMAGE**

- Mount the maintenance bypass panel to a wall or a rack that is structurally sound and able to support the weight of the unit.
- Use appropriate hardware for the wall/rack type.

**Failure to follow these instructions can result in injury or equipment damage.**

1. Remove the screws and open the inner door in the maintenance bypass panel.

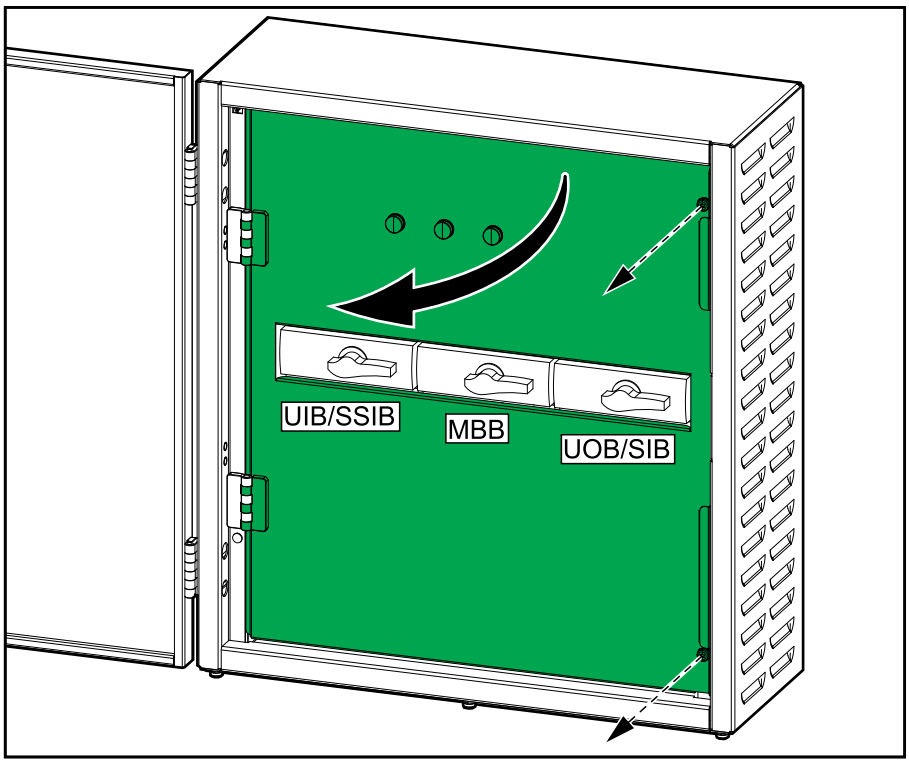

2. Measure and mark the four mounting hole locations on the wall.

**GVSBPSU10K20H**

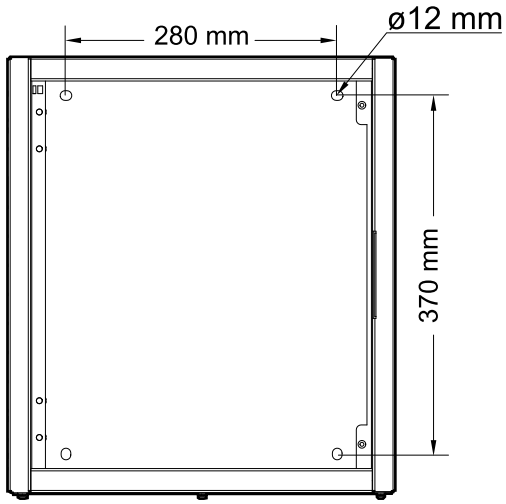


**GVSBPSU20K60H**

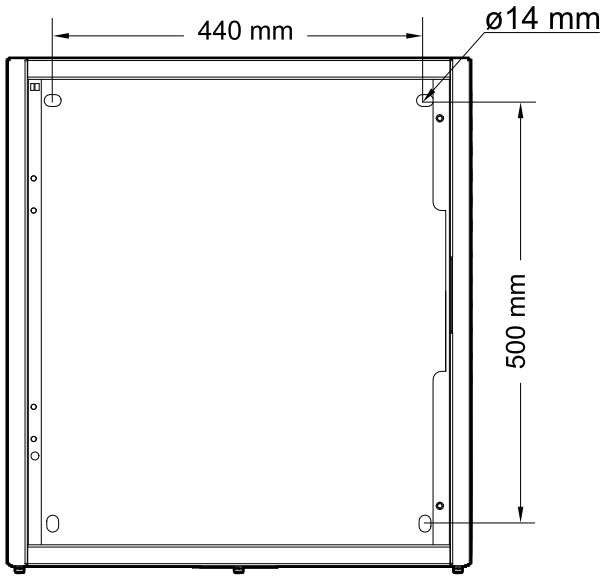


**GVSBPSU80K120H**

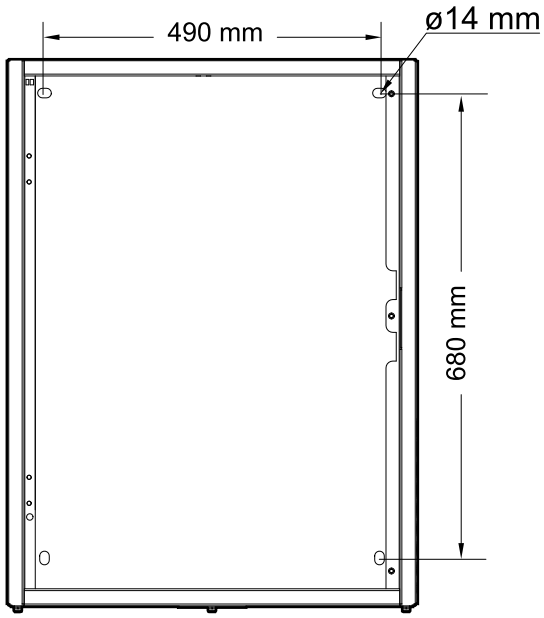


3. Drill holes in the four marked locations and mount the anchor bolts.
4. Mount the maintenance bypass panel to the wall.

# Prepare the Maintenance Bypass Panel for Cables

**⚠ DANGER**

**HAZARD OF ELECTRIC SHOCK, EXPLOSION, OR ARC FLASH**

Do not drill or punch holes with the gland plates installed and do not drill or punch holes in close proximity to the maintenance bypass cabinet.

**Failure to follow these instructions will result in death or serious injury.**

1. Loosen the six bolts from the bottom gland plate and remove the gland plate.

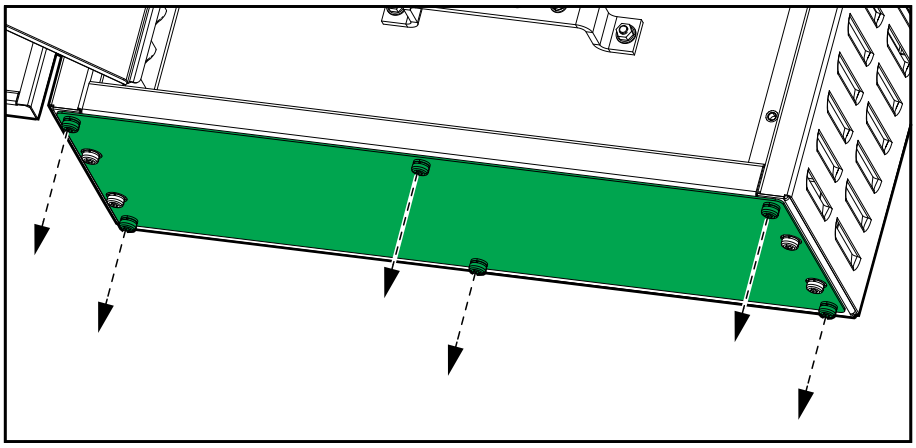

2. Drill or punch holes for cables or grommets.

**⚠ DANGER**

**HAZARD OF ELECTRIC SHOCK, EXPLOSION, OR ARC FLASH**

Ensure that there are no sharp edges that can damage the cables.

**Failure to follow these instructions will result in death or serious injury.**

3. Install grommets (if applicable) and reinstall the gland plate(s).

# Remove the Neutral Jumper (Option)

**NOTE:** The neutral jumper makes a bolted connection of the neutral so that the neutral is not disconnected when the 4-pole breakers are opened. Only remove the neutral jumpers if this is a local requirement.

1. Remove the neutral jumpers from the breakers.

**GVSBPSU10K20H**

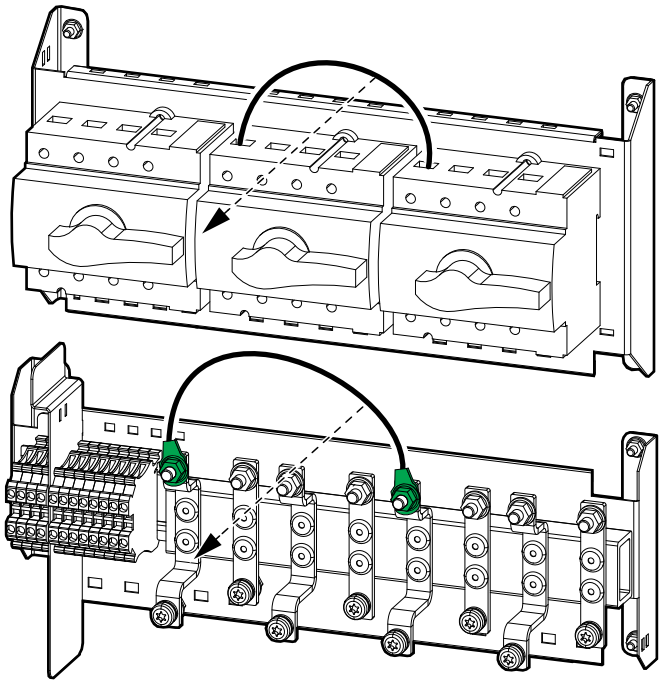

**GVSBPSU20K60H**

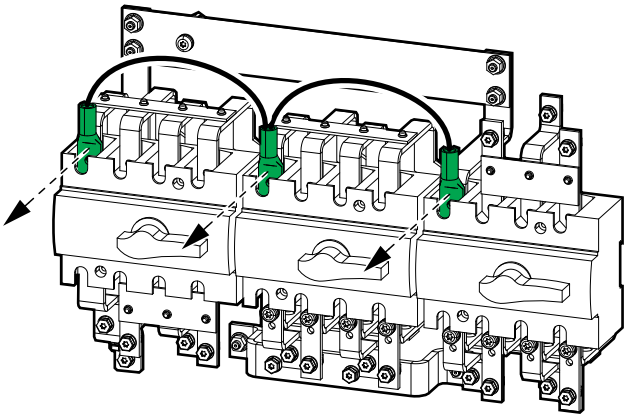

**GVSBPSU80K120H**

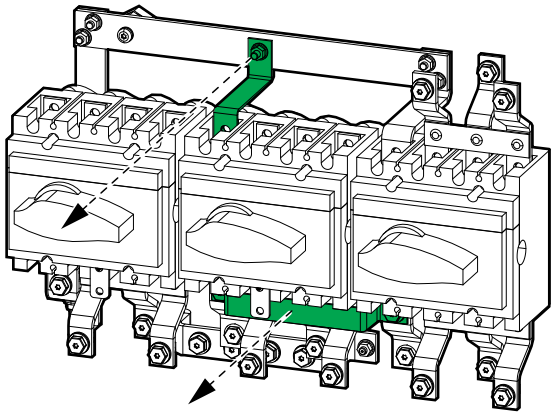

# Connect the Power Cables

**NOTE:** For a simplified 1+1 parallel system, install the power cables from the two UPSs on the front and rear side of the busbar using the same bolt.

1. Connect the PE cables to the PE busbar.

**GVSBPSU10K20H**

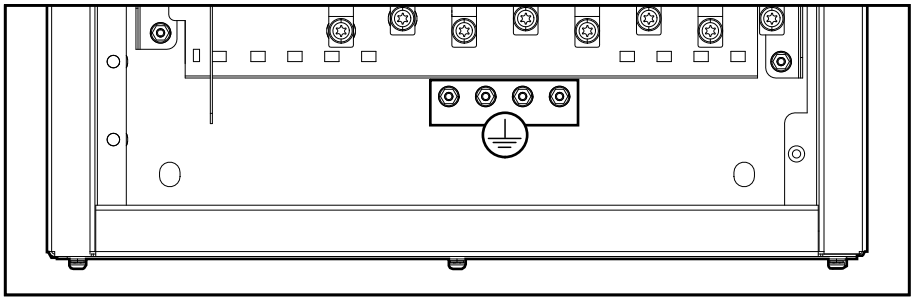

**GVSBPSU20K60H and GVSBPSU80K120H**

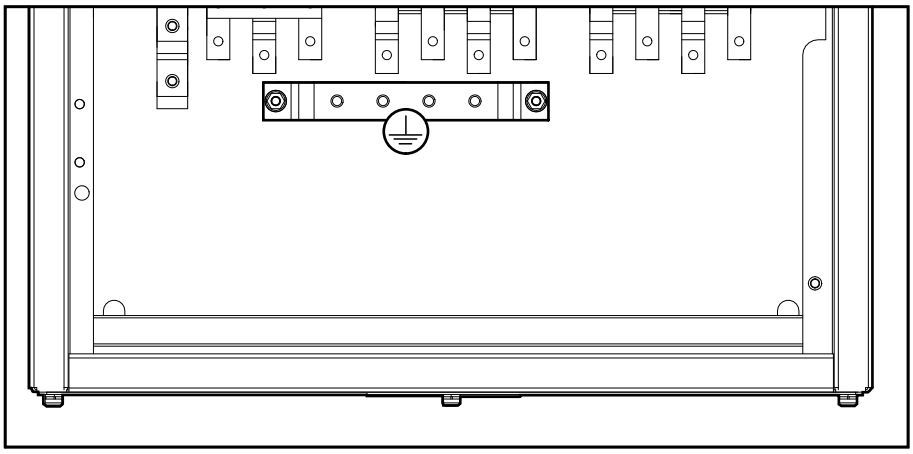

2. Do one of the following:
   - **For single mains**: Connect the input cables from utility/mains.
   - **For dual mains**: Connect the bypass cables from utility/mains.
3. Do one of the following:
   - **For single mains**: Connect the UPS input cables.
   - **For dual mains**: Connect the UPS bypass cables.
4. Connect the UPS output cables.

5. Connect the load cables.

**GVSBPSU10K20H**

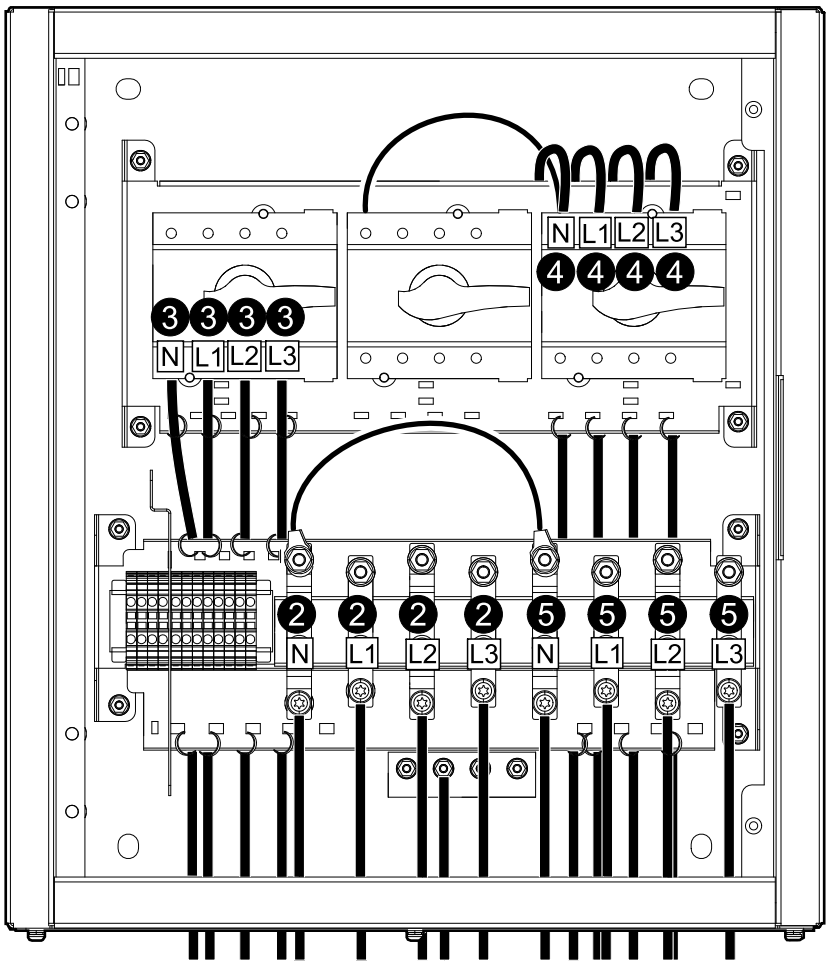

**GVSBPSU20K60H and GVSBPSU80K120H**

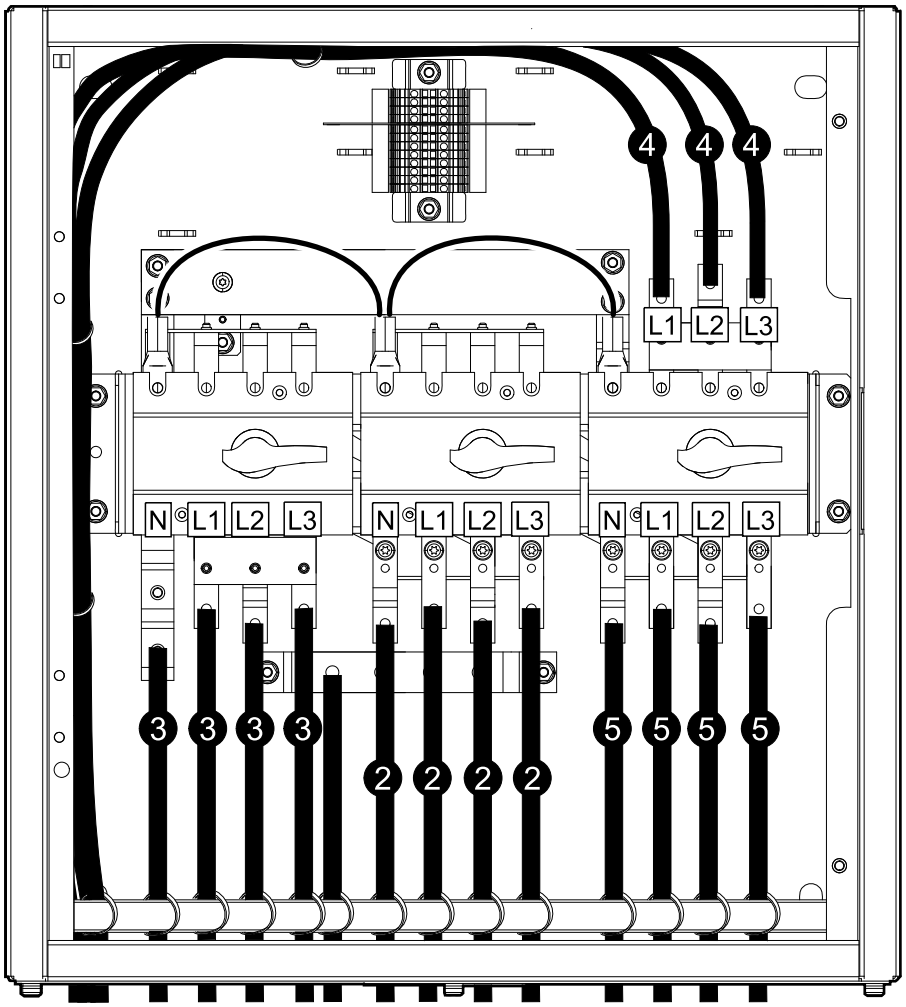


6. Fasten the cables with cable ties (provided) to the cable reliefs in the left side, top, and bottom of the maintenance bypass panel.

# Connect the Signal Cables for Single System

**NOTE:** Route the signal cables separately from the power cables and route the Class 2/SELV cables separately from the non-Class 2/non-SELV cables.

**GVSBPSU10K20H**

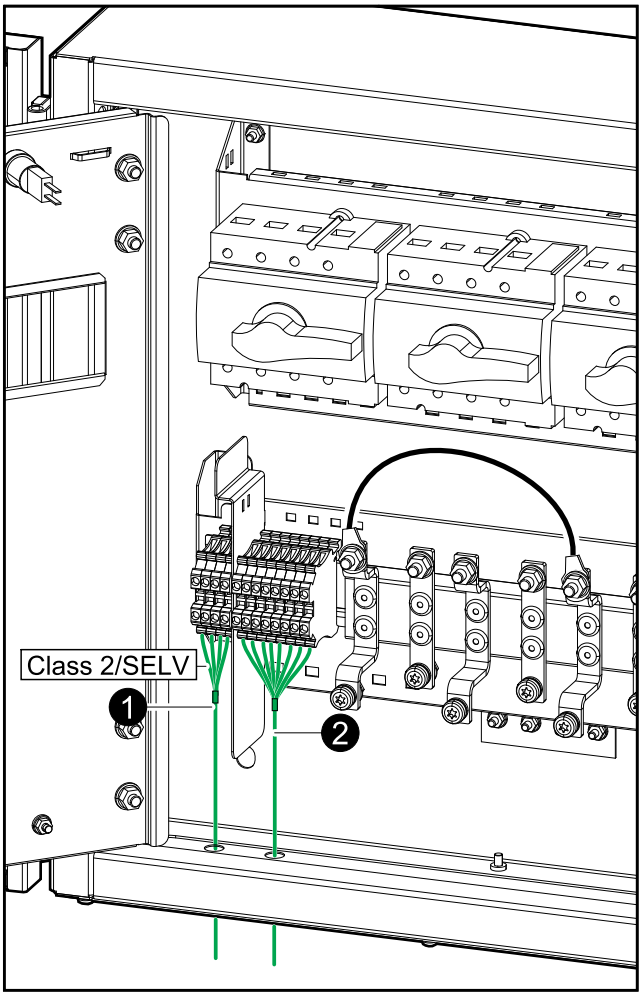


**GVSBPSU20K60H and GVSBPSU80K120H**

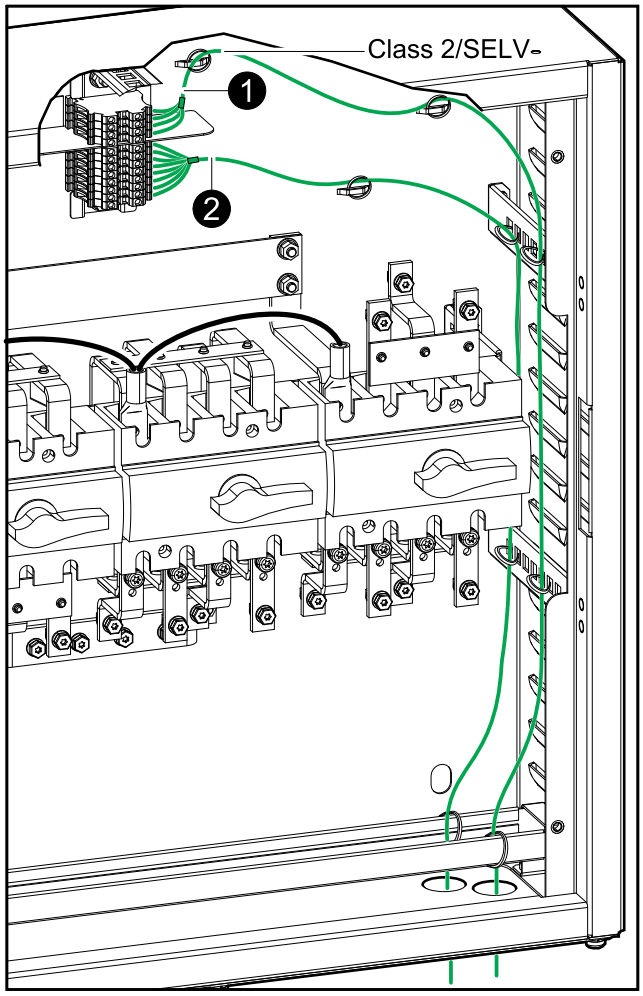

1. Connect the Class 2/SELV signal cables for the breaker indicator lights from the control terminal block in the maintenance bypass panel to the UPS as per your configuration.

   **NOTE:** The breaker indicator light circuit is considered Class 2/SELV. Class 2/SELV circuits must be isolated from the primary circuitry. Do not connect any circuit to the breaker indicator light terminals unless it can be confirmed that the circuit is Class 2/SELV.

**Single System – Single Mains**

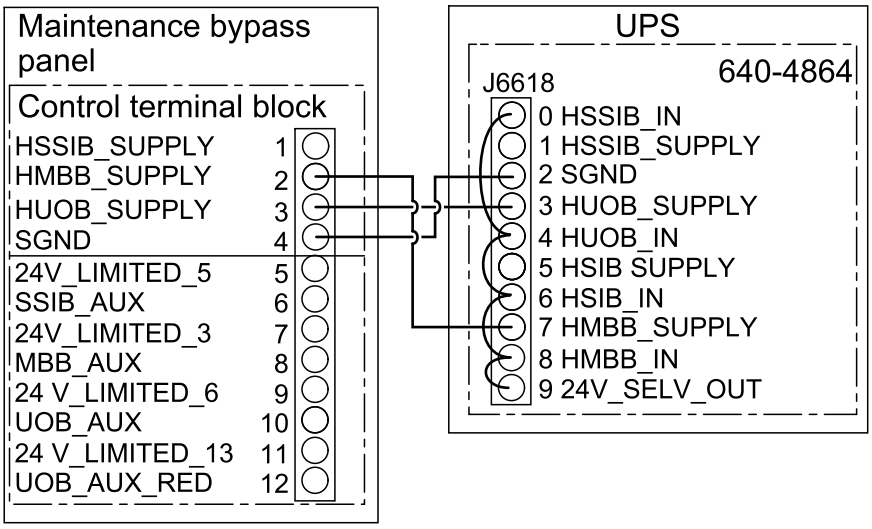


**Single System – Dual mains**

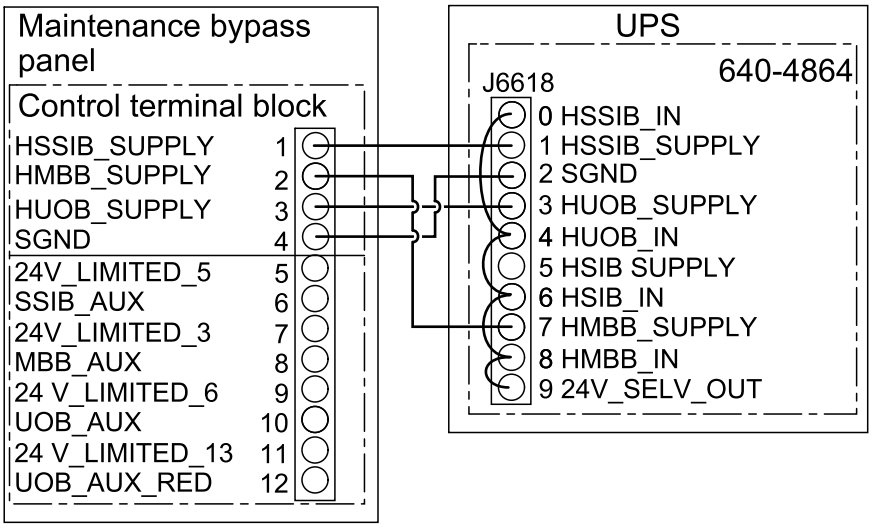

2. Connect the non-Class 2/non-SELV signal cables from the control terminal block in the maintenance bypass panel to the UPS as per your configuration.

**Single System – Single Mains**

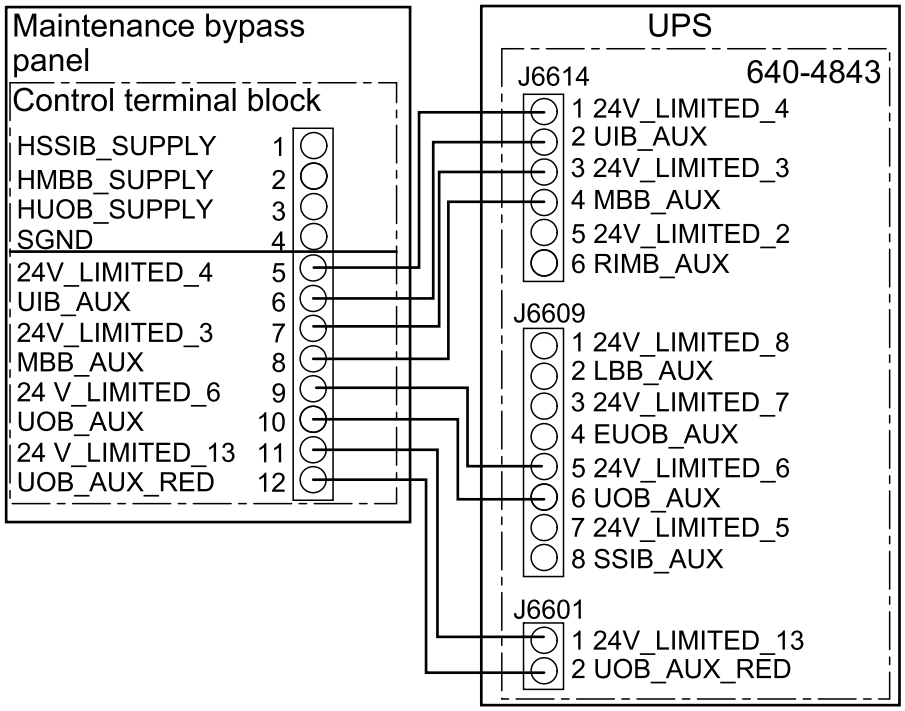


**Single System – Dual Mains**

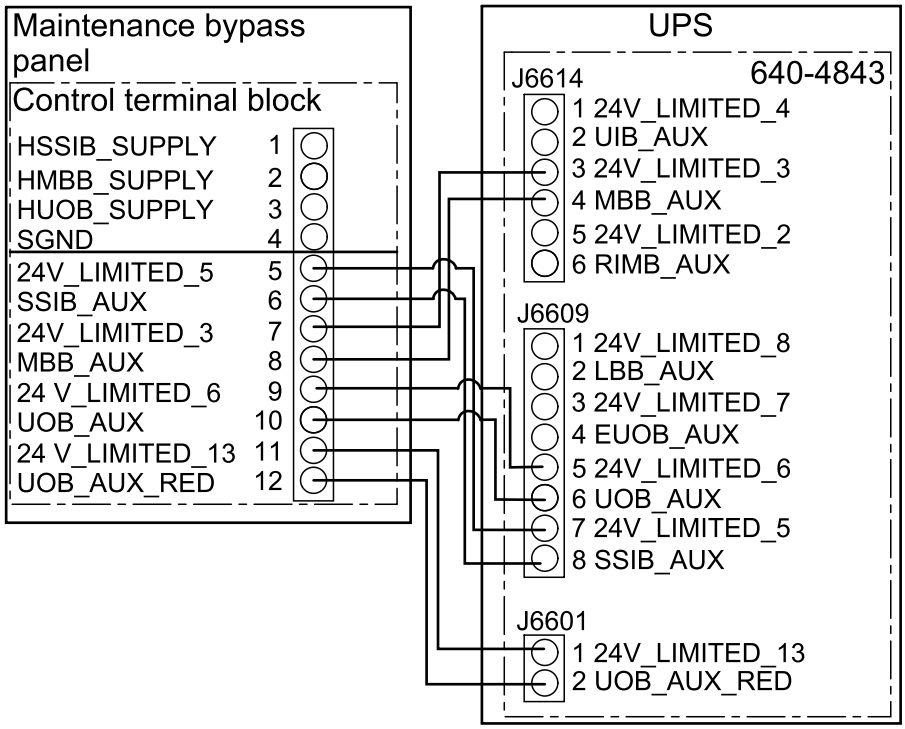


3. Pull up the slack in the signal cables and fasten the signal cables to the cable reliefs.

# Connect the Signal Cables for Simplified 1+1 Parallel System

**NOTE:** The breaker indicator lights are supplied by UPS 1 and will only work while UPS 1 is powered.

**NOTE:** The AUX switches are in optional parallel installation kit GVSOPT006 provided with the UPS.

**NOTE:** Route the signal cables separately from the power cables and route the Class 2/SELV cables separately from the non-Class 2/non-SELV cables.

1. Install an AUX switch in the unit input breaker UIB/static switch input breaker SSIB and the maintenance bypass breaker MBB.
   a. Remove the AUX switch cover on the UIB/SSIB and MBB breaker.
   b. Install the AUX switch from kit GVSOPT006 in the UIB/SSIB and MBB breaker.
   c. Connect the non-Class 2/non-SELV signal cables to the AUX switch in the UIB/SSIB and MBB breaker.
   d. Reinstall the AUX switch cover on the UIB/SSIB and MBB breaker.
   e. **Only for GVSBPSU80K120H**: Fasten the signal cables to the plastic tabs to ensure correct separation from the busbars.

**GVSBPSU10K20H**

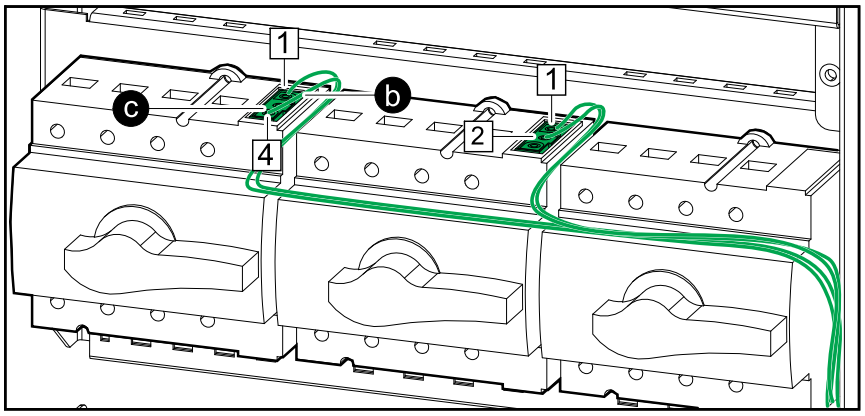


**GVSBPSU20K60H**

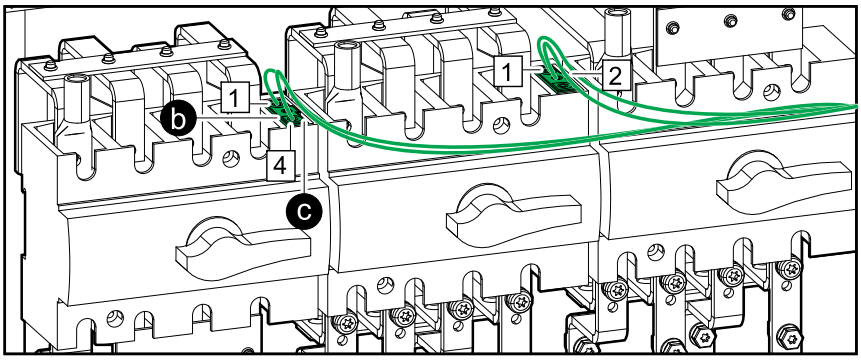


**GVSBPSU80K120H**

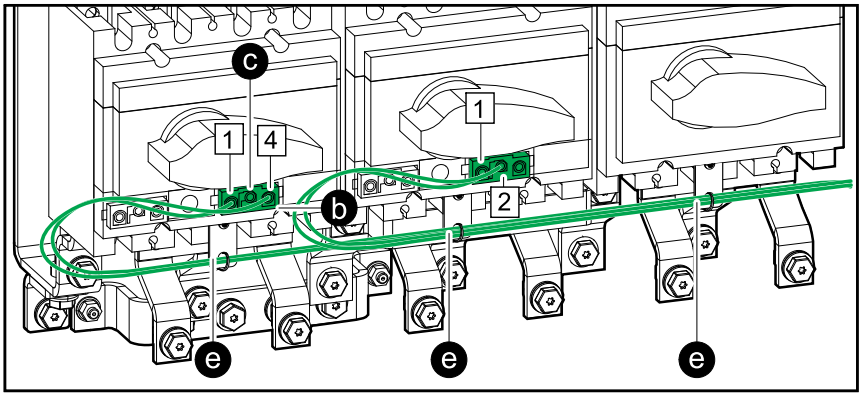

2. Connect the Class 2/SELV signal cables for the breaker indicator lights from the control terminal block in the maintenance bypass panel to the UPSs as per your configuration.

   **NOTE:** The breaker indicator light circuit is considered Class 2/SELV. Class 2/SELV circuits must be isolated from the primary circuitry. Do not connect any circuit to the breaker indicator light terminals unless it can be confirmed that the circuit is Class 2/SELV.

**Simplified 1+1 Parallel System – Single Mains**

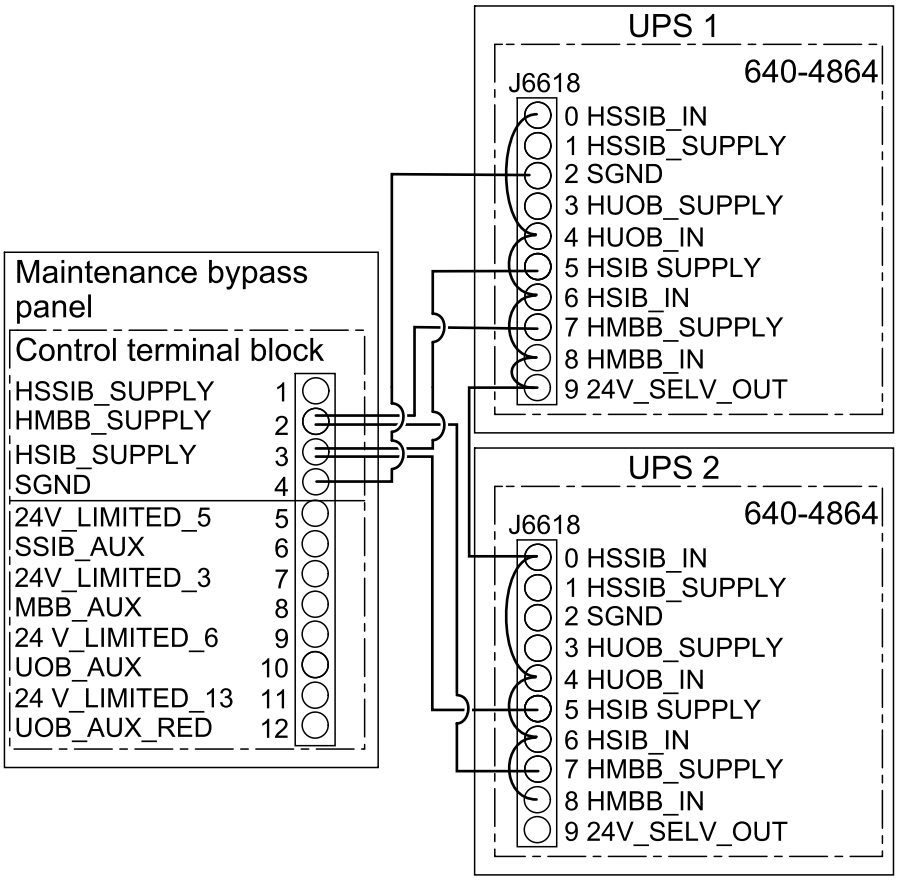

**Simplified 1+1 Parallel System – Dual mains**

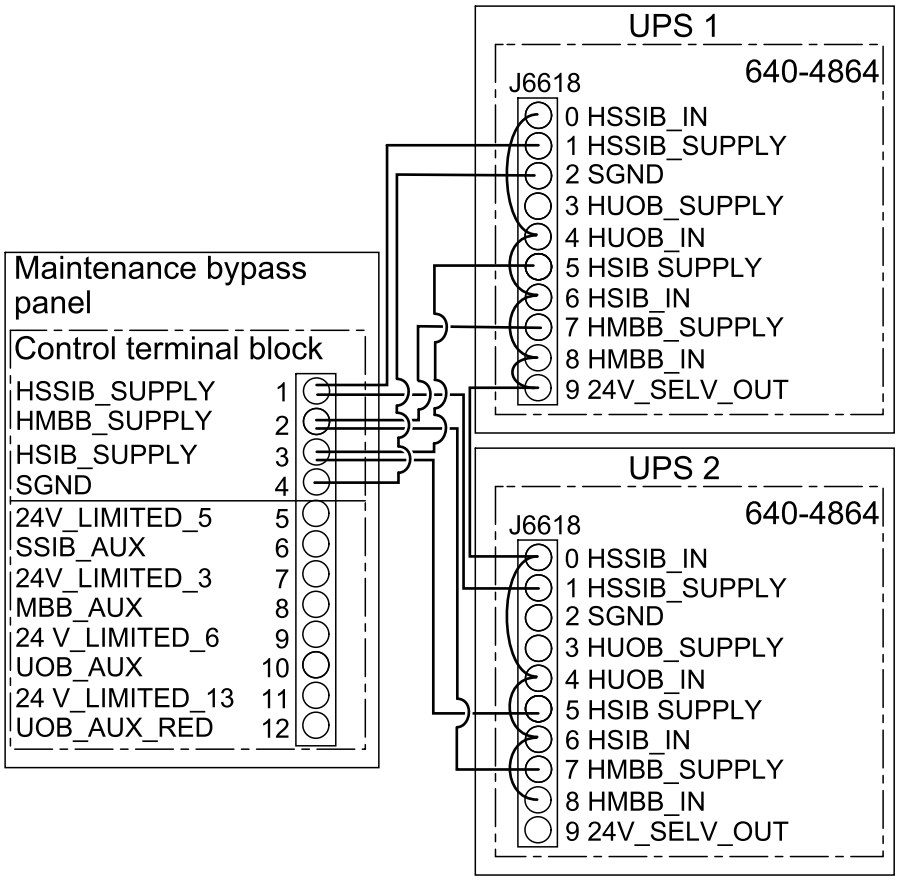


3. **On UPS 2**: Cut the preinstalled jumper between pins 8 and 9 on the terminal connector for J6618 on board 640-4864.

## *NOTICE*

**RISK OF INCORRECT EQUIPMENT BEHAVIOR**

Cut the preinstalled jumper between pins 8 and 9 on terminal J6618 on board 640-4864 on UPS 2. The 24 V_SELV_OUT cannot be supplied from both UPSs.

**Failure to follow these instructions can result in equipment damage.**

4. Connect the non-Class 2/non-SELV signal cables from the control terminal block in the maintenance bypass panel to the UPSs as per your configuration.

**Simplified 1+1 Parallel System – Single Mains**

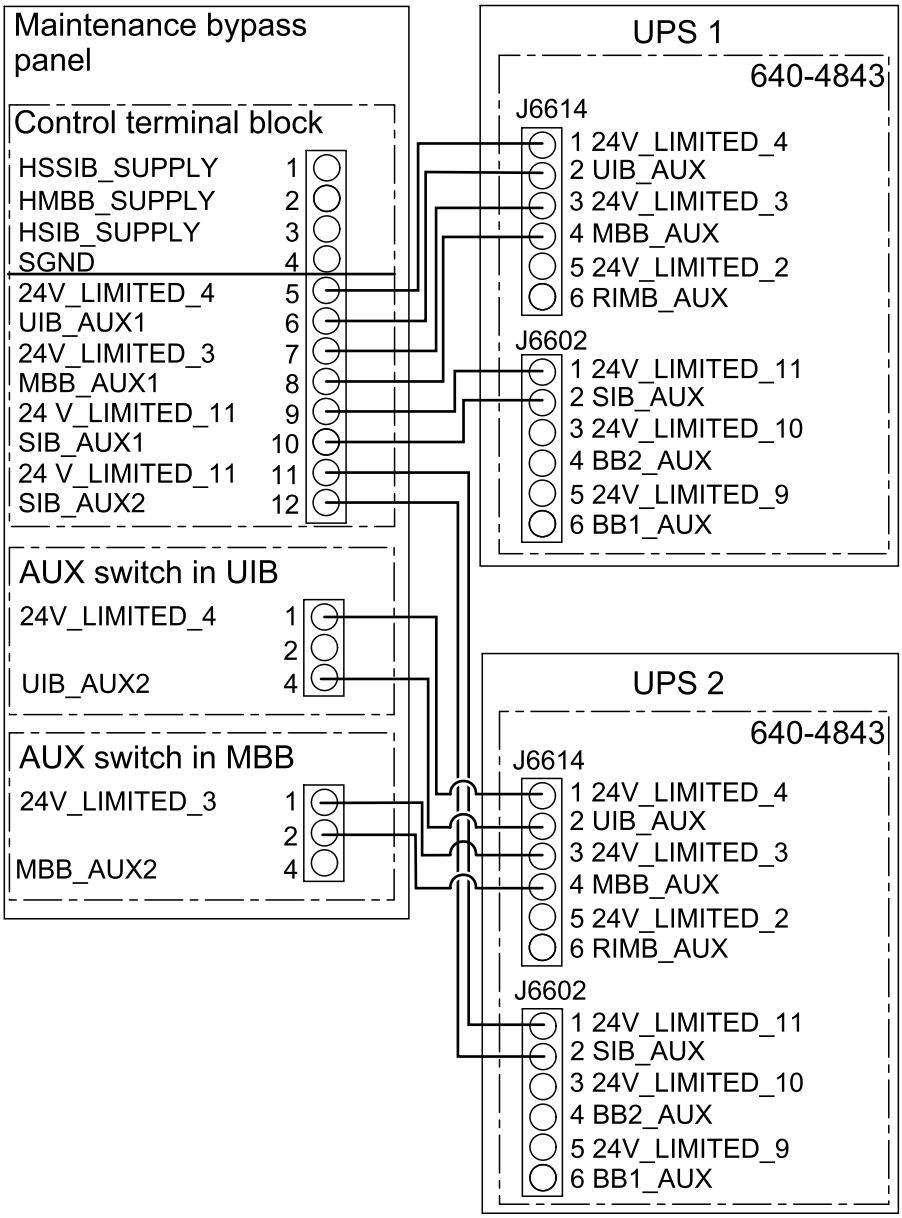

**Simplified 1+1 Parallel System – Dual Mains**

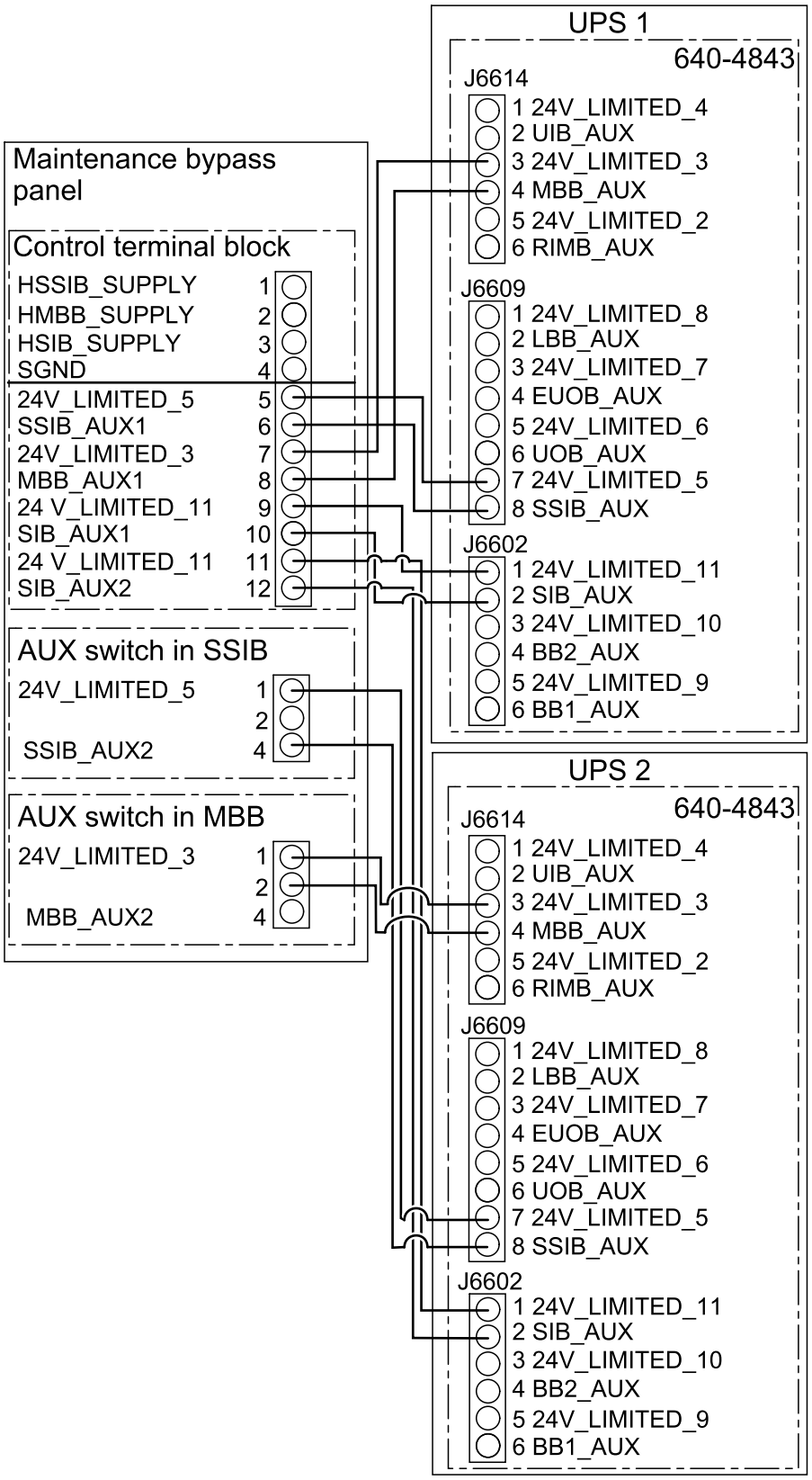

**GVSBPSU10K20H**

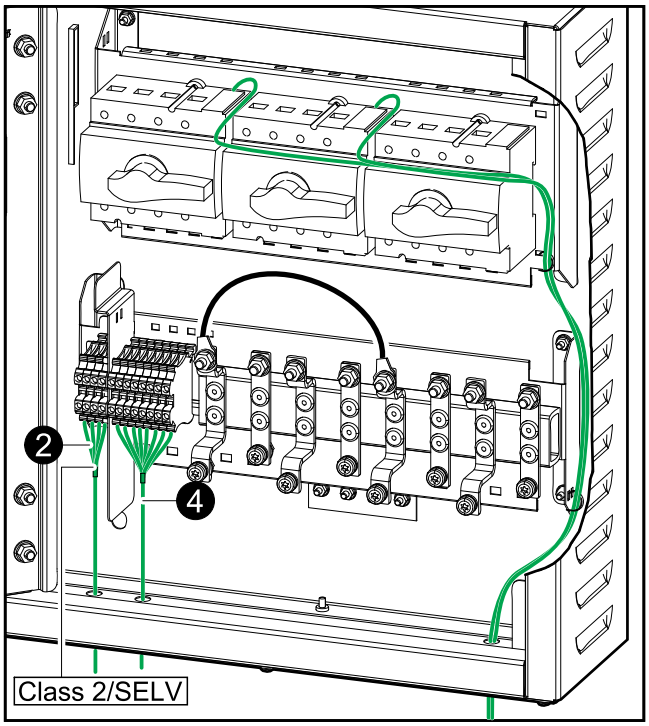


**GVSBPSU20K60H**

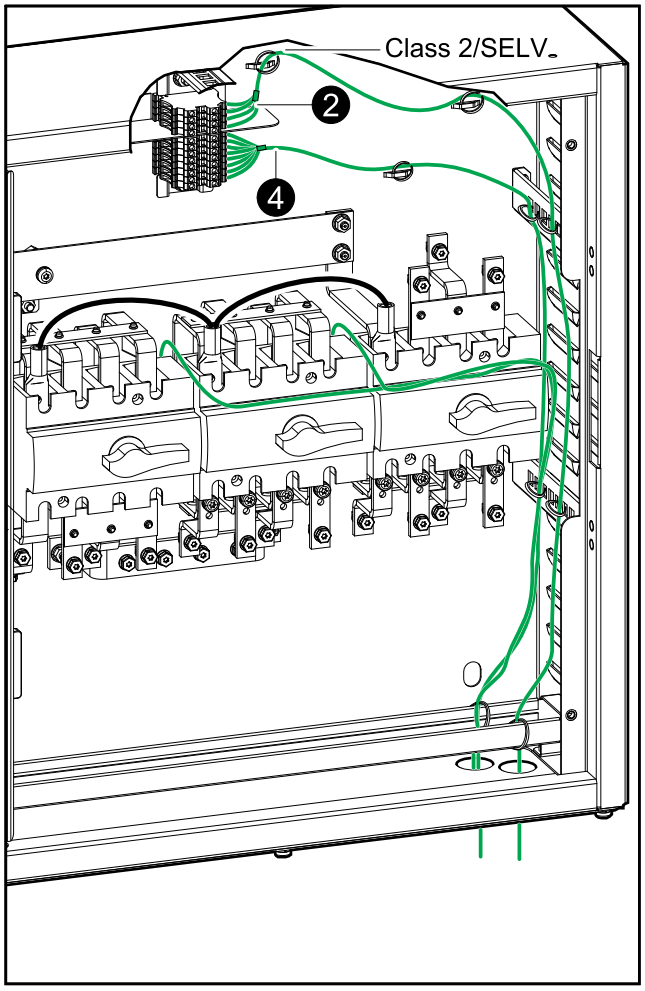


**GVSBPSU80K120H**

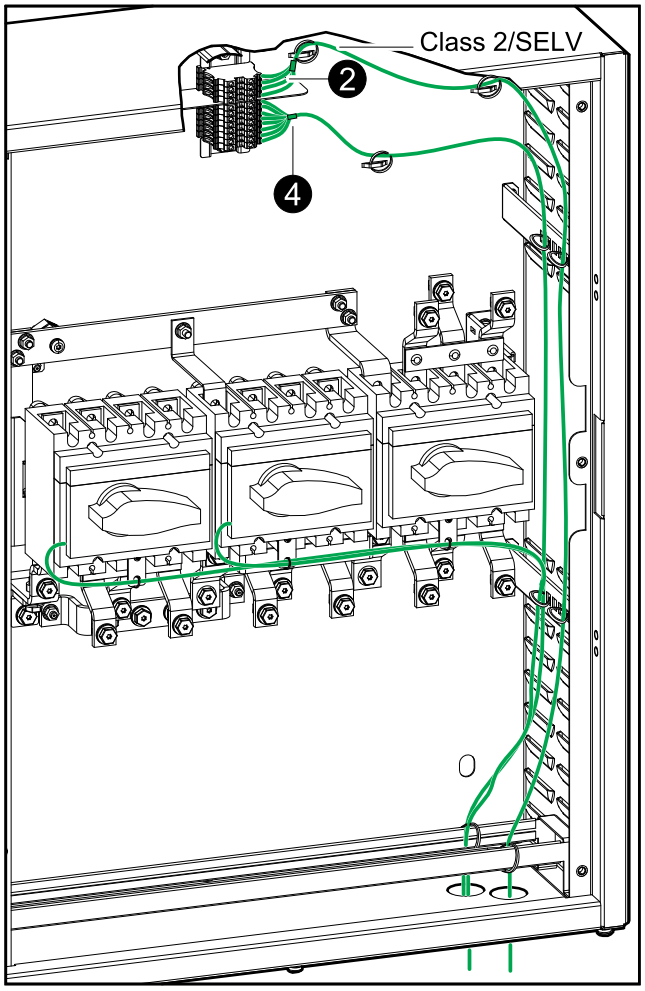


5. Pull up the slack in the signal cables and fasten the signal cables to the cable reliefs.

# Add Translated Safety Labels to Your Product

The safety labels on your product are in English and French. Sheets with translated safety labels are provided with your product.

1. Find the sheets with translated safety labels provided with your product.
2. Check which 885-XXX numbers are on the sheet with translated safety labels.
3. Locate the safety labels on your product that match the translated safety labels on the sheet – look for the 885-XXX numbers.
4. Add the replacement safety label in your preferred language to your product on top of the existing French safety label.

# Final Installation

1. Close the inner door and fasten it with the screws.
2. Add labels to the breaker indicator lamps, the breakers, and the diagram label according to your system. The labels are provided with this manual.

### Labels in Single System – Single Mains

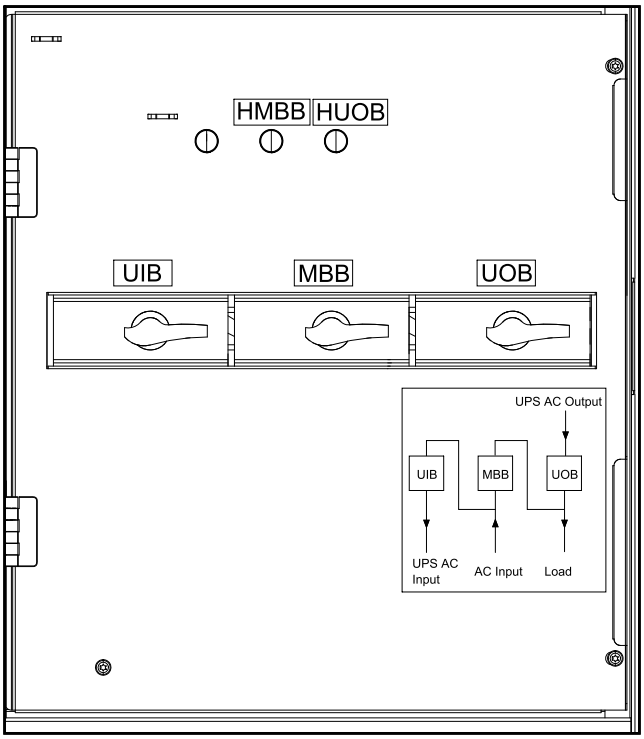


### Labels in Single System – Dual Mains

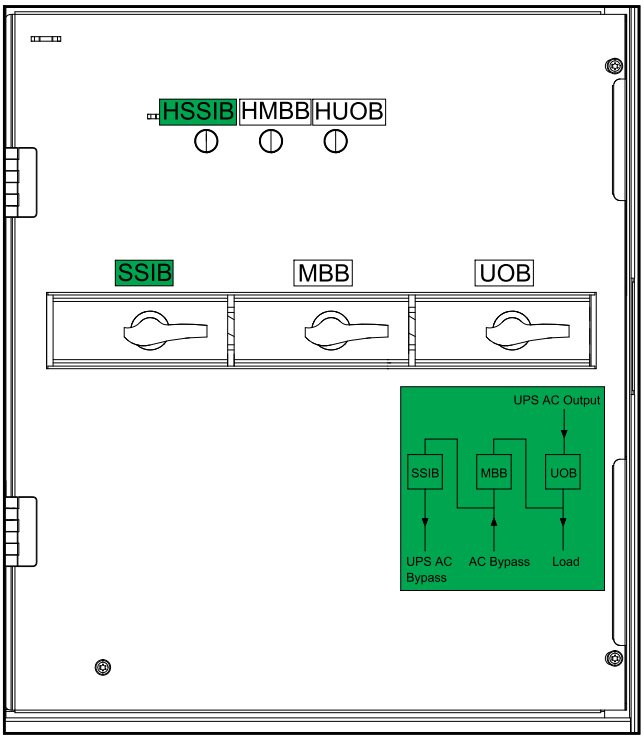


### Labels in Simplified 1+1 Parallel System – Single Mains

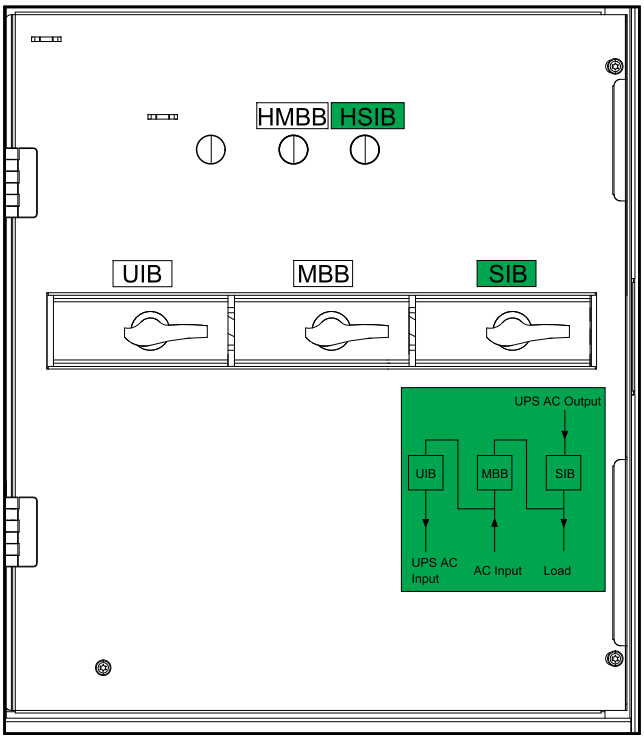


### Labels in Simplified 1+1 Parallel System – Dual Mains

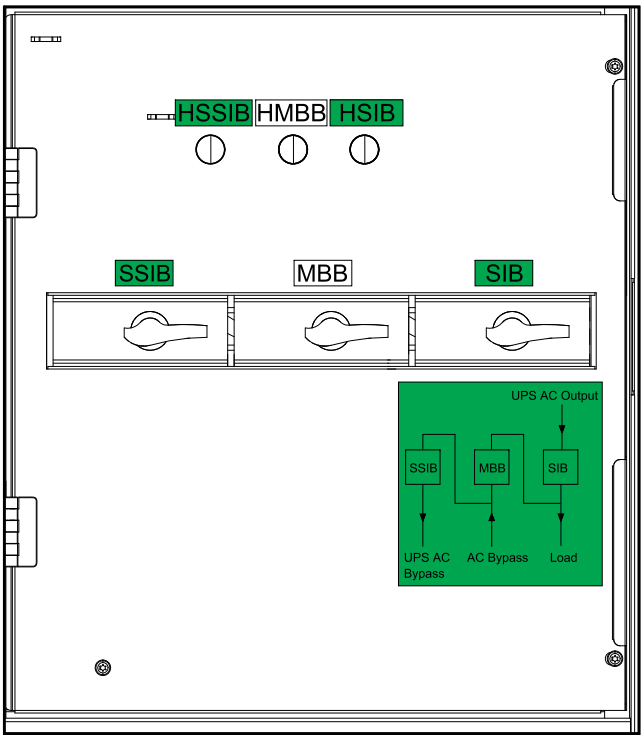

Schneider Electric
35 rue Joseph Monier
92500 Rueil Malmaison
France

+ 33 (0) 1 41 29 70 00

*990-5912B-001*

As standards, specifications, and design change from time to time, please ask for confirmation of the information given in this publication.

© 2018 – 2019 Schneider Electric. All rights reserved.

990-5912B-001