Kensington®

SmartFit® Mouse Pad

1

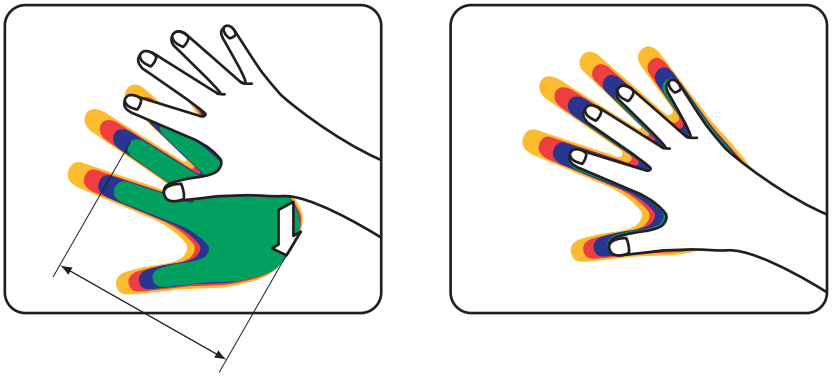

2

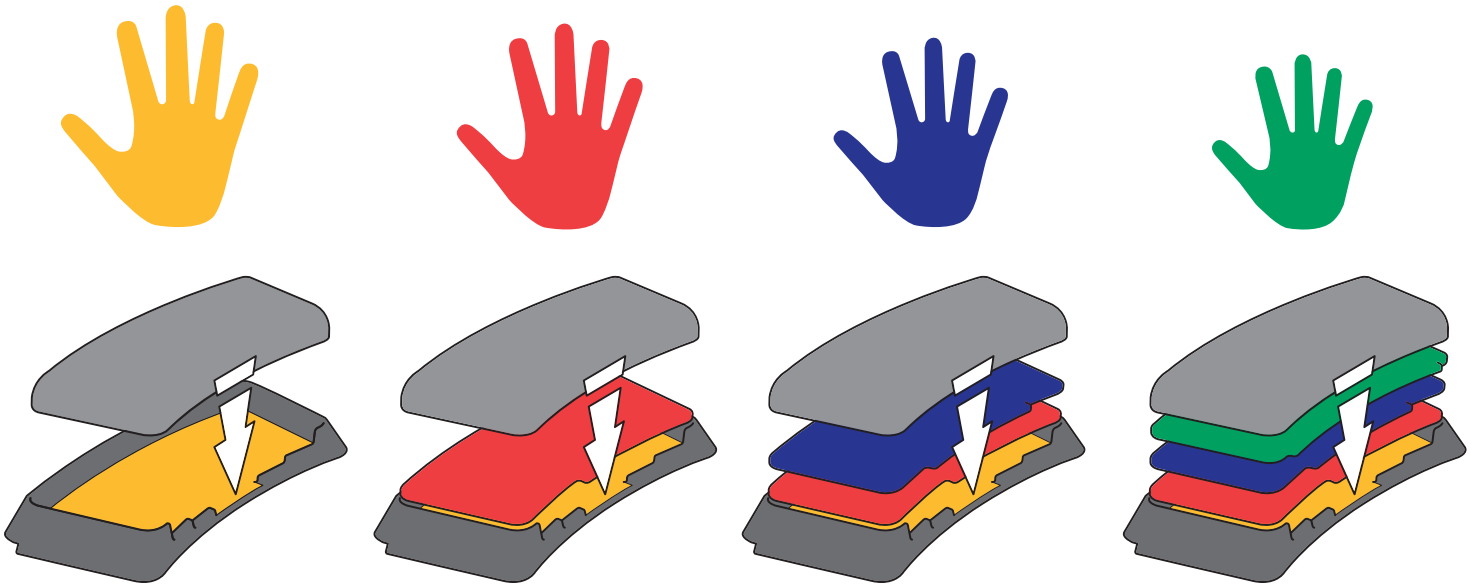

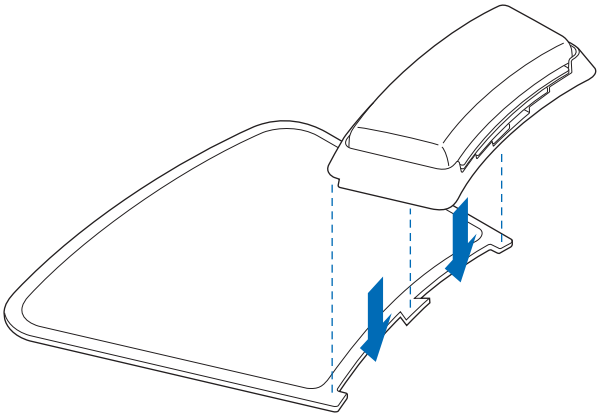

3

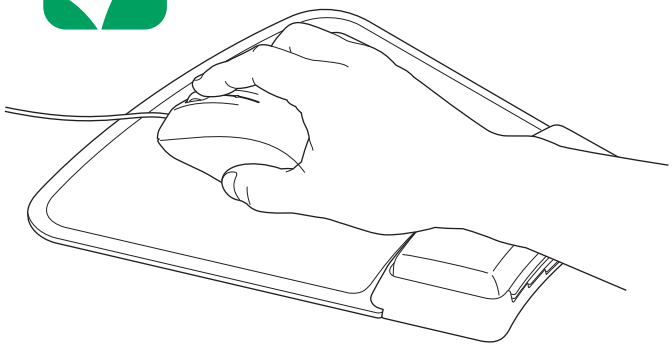

Kensington and the ACCO name and design are registered trademarks of ACCO Brands. SmartFit is a trade mark of ACCO Brands. All other registered and unregistered trademarks are the property of their respective owners.
©2015 Kensington Computer Products Group, a division of ACCO Brands. Any unauthorized copying, duplicating, or other reproduction of the contents hereof is prohibited without written consent from Kensington Computer Products Group. All rights reserved. 08/15

K55793AM

901-4860-01