Easy UPS 3S

10-40 kVA 400 V & 10-20 kVA 208 V 3:3, 10-30 kVA 400 V 3:1

Operation

Latest updates are available on the Schneider Electric website
6/2023

Legal Information

The Schneider Electric brand and any trademarks of Schneider Electric SE and its subsidiaries referred to in this guide are the property of Schneider Electric SE or its subsidiaries. All other brands may be trademarks of their respective owners.

This guide and its content are protected under applicable copyright laws and furnished for informational use only. No part of this guide may be reproduced or transmitted in any form or by any means (electronic, mechanical, photocopying, recording, or otherwise), for any purpose, without the prior written permission of Schneider Electric.

Schneider Electric does not grant any right or license for commercial use of the guide or its content, except for a non-exclusive and personal license to consult it on an "as is" basis. Schneider Electric products and equipment should be installed, operated, serviced, and maintained only by qualified personnel.

As standards, specifications, and designs change from time to time, information contained in this guide may be subject to change without notice.

To the extent permitted by applicable law, no responsibility or liability is assumed by Schneider Electric and its subsidiaries for any errors or omissions in the informational content of this material or consequences arising out of or resulting from the use of the information contained herein.

Find the manuals here:
Trouvez les manuels ici:
在这里找到手册
Hier finden Sie die Handbücher:
Encuentre los manuales aquí:
Encontre os manuais aqui:

https://www.productinfo.schneider-electric.com/easyups3s/

Table of Contents

Important Safety Instructions — SAVE THESE INSTRUCTIONS 5
- Electromagnetic Compatibility 6
- Safety Precautions 6

Overview 7
- User Interface 7
  - Display Interface 9
  - Menu Tree 9
- Overview of Single UPS 11
- Overview of 1+1 Redundant Parallel System with Common Battery Bank 12
- Overview of Parallel System 13
- Location of Breakers - 400 V Systems 16
- Location of Breakers - 208 V Systems 20

Operation Modes 22

Operation Procedures 26
- Initial Start-Up of the UPS Using the Wizard – Only Applicable to Single UPSs with Internal Batteries 26
  - Start-Up Checklist – Only Applicable to Single UPSs with Internal Batteries 27
- Start Up a Single UPS in Normal Mode 27
- Transfer a Single UPS from Normal Mode to Static Bypass Mode 29
- Transfer a Single UPS from Static Bypass Mode to Normal Mode 30
- Transfer a Single UPS from Normal Mode to Maintenance Bypass Mode 30
- Transfer a Single UPS from Maintenance Bypass Mode to Normal Mode 31
- Transfer a Parallel System from Normal Mode to Maintenance Bypass Mode 32
- Transfer a Parallel System from Maintenance Bypass Mode to Normal Mode 33
- Isolate a Single UPS from the Parallel System 34
- Start Up and Add a UPS to a Running Parallel System 35

Configuration 37
- Register Your Easy UPS 3S 37
- Set the Display Language 37
- Set the Date and Time 38
- Set the UPS Settings 38
- Set the Battery Settings 39
  - Recommended Settings for 400 V UPSs with Internal Batteries and Modular Battery Cabinets 40
  - Recommended Settings for 208 V UPSs with Internal Batteries and Modular Battery Cabinets 42
- Set the Life Cycle Monitoring 44
- Settings 45

Tests 47
- Perform a Battery Maintenance Test 47

Perform a Battery Test 47
Maintenance 48
Parts Replacement 48
Determine if you need a Replacement Part 48
Replace the Dust Filter 48
Troubleshooting 51
View the Active Alarms 51
Buzzer 51
Status and Alarm Messages 51
Appendix: Switch/Breaker Details 56

Important Safety Instructions — SAVE THESE INSTRUCTIONS

Read these instructions carefully and look at the equipment to become familiar with it before trying to install, operate, service or maintain it. The following safety messages may appear throughout this manual or on the equipment to warn of potential hazards or to call attention to information that clarifies or simplifies a procedure.

The addition of this symbol to a “Danger” or “Warning” safety message indicates that an electrical hazard exists which will result in personal injury if the instructions are not followed.

This is the safety alert symbol. It is used to alert you to potential personal injury hazards. Obey all safety messages with this symbol to avoid possible injury or death.

⚠ DANGER

DANGER indicates a hazardous situation which, if not avoided, **will result in** death or serious injury.

Failure to follow these instructions will result in death or serious injury.

⚠ WARNING

WARNING indicates a hazardous situation which, if not avoided, **could result in** death or serious injury.

Failure to follow these instructions can result in death, serious injury, or equipment damage.

⚠ CAUTION

CAUTION indicates a hazardous situation which, if not avoided, **could result in** minor or moderate injury.

Failure to follow these instructions can result in injury or equipment damage.

NOTICE

NOTICE is used to address practices not related to physical injury. The safety alert symbol shall not be used with this type of safety message.

Failure to follow these instructions can result in equipment damage.

Please Note

Electrical equipment should only be installed, operated, serviced, and maintained by qualified personnel. No responsibility is assumed by Schneider Electric for any consequences arising out of the use of this material.

A qualified person is one who has skills and knowledge related to the construction, installation, and operation of electrical equipment and has received safety training to recognize and avoid the hazards involved.

Per IEC 62040-1: "Uninterruptible power systems (UPS) -- Part 1: Safety Requirements," this equipment, including battery access, must be inspected, installed and maintained by a skilled person.

The skilled person is a person with relevant education and experience to enable him or her to perceive risks and to avoid hazards which the equipment can create (reference IEC 62040, section 3.102).

Electromagnetic Compatibility

NOTICE

RISK OF ELECTROMAGNETIC DISTURBANCE

This is a product Category C3 according to IEC 62040-2. This is a product for commercial and industrial applications in the second environment - installation restrictions or additional measures may be needed to prevent disturbances. The second environment includes all commercial, light industry, and industrial locations other than residential, commercial, and light industrial premises directly connected without intermediate transformer to a public low-voltage mains supply. The installation and cabling must follow the electromagnetic compatibility rules, e.g.:

- the segregation of cables,
- the use of shielded or special cables when relevant,
- the use of grounded metallic cable tray and supports.

Failure to follow these instructions can result in equipment damage.

Safety Precautions

DANGER

HAZARD OF ELECTRICAL SHOCK, EXPLOSION OR ARC FLASH

All safety instructions in this document must be read, understood and followed.

Failure to follow these instructions will result in death or serious injury.

DANGER

HAZARD OF ELECTRICAL SHOCK, EXPLOSION OR ARC FLASH

After the UPS system has been electrically wired, do not start up the system. The start-up requirements depend on the installation country. For countries with bundled start-up service, start-up must be performed by Schneider Electric.

Failure to follow these instructions will result in death or serious injury.

Overview

User Interface

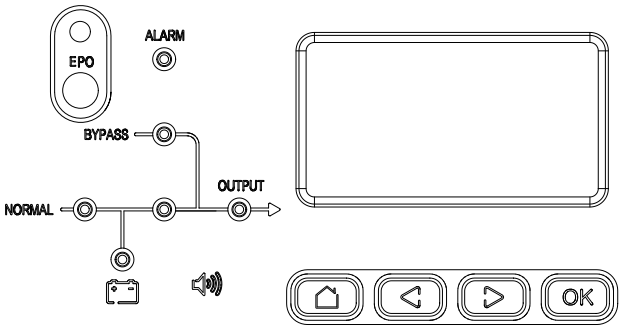

Keys

Home	Previous	Next	Confirm

EPO

Only use the EPO button in case of emergency.

It can be configured whether, when the EPO is activated, the UPS should:

- turn off the rectifier, inverter, charger, and static bypass and stop supplying the load immediately (default), or
- transfer to static bypass mode and continue supplying the load.

⚠⚠DANGER

HAZARD OF ELECTRIC SHOCK, EXPLOSION, OR ARC FLASH

The UPS control circuit will remain active after the EPO has been pushed if utility/mains is available.

Failure to follow these instructions will result in death or serious injury.

Status LEDs

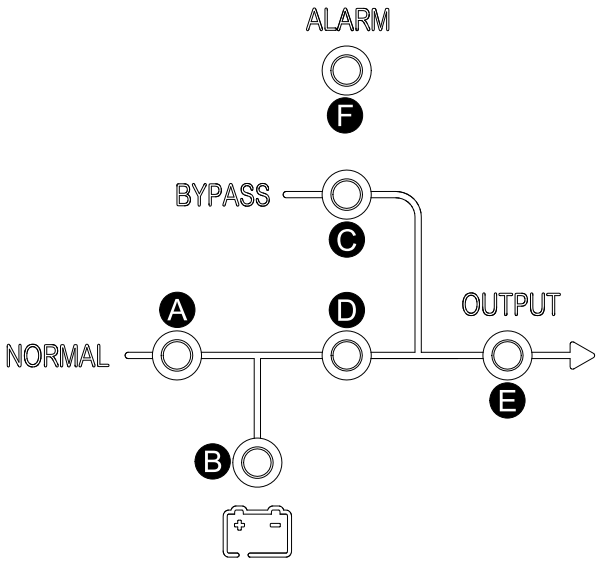

	LED	Status
A	Rectifier	Green: Rectifier is working correctly. Flashing green: Rectifier is starting up. Red: Rectifier is inoperable. Flashing red: Utility/mains is unavailable. OFF: Rectifier is off.
B	Battery	Green: Battery is charging. Flashing green: Battery is discharging. Red: Battery is inoperable. Flashing red: Battery low voltage. OFF: Battery and battery charger are OK, battery is not charging or discharging.
C	Bypass	Green: Load supplied by bypass source. Red: Bypass source is unavailable or static bypass switch is inoperable. Flashing red: Bypass voltage is out of tolerance. OFF: Bypass source is OK.
D	Inverter	Green: Load supplied by inverter. Flashing green: Inverter on, start, synchronization or standby (ECO mode). Red: Load not supplied by inverter, inverter is inoperable.

	LED	Status
		Flashing red: Load supplied by inverter, but an inverter alarm is present. OFF: Inverter is off.
E	Load	Green: UPS output is on. Red: Overload on UPS output for too long, or output has shorted, or no output power present. Flashing red: Overload on UPS output. OFF: UPS output is off.
F	Status	Green: UPS is OK. Red: Inoperable status.

Display Interface

Home Screen

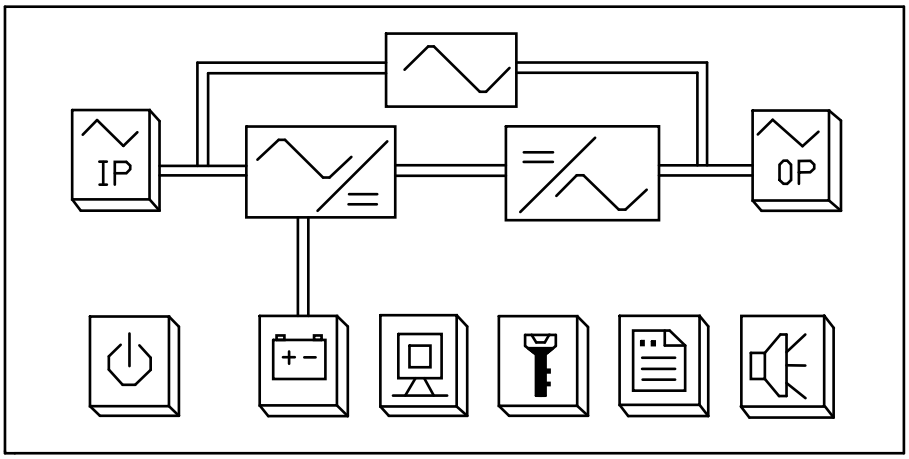

Buttons

Power On/ Off	Input and bypass status information	Output status information	Battery status information	UPS status	Function settings	Log	Mute

Menu Tree

Tap the main menu button on the home screen to access the menus.

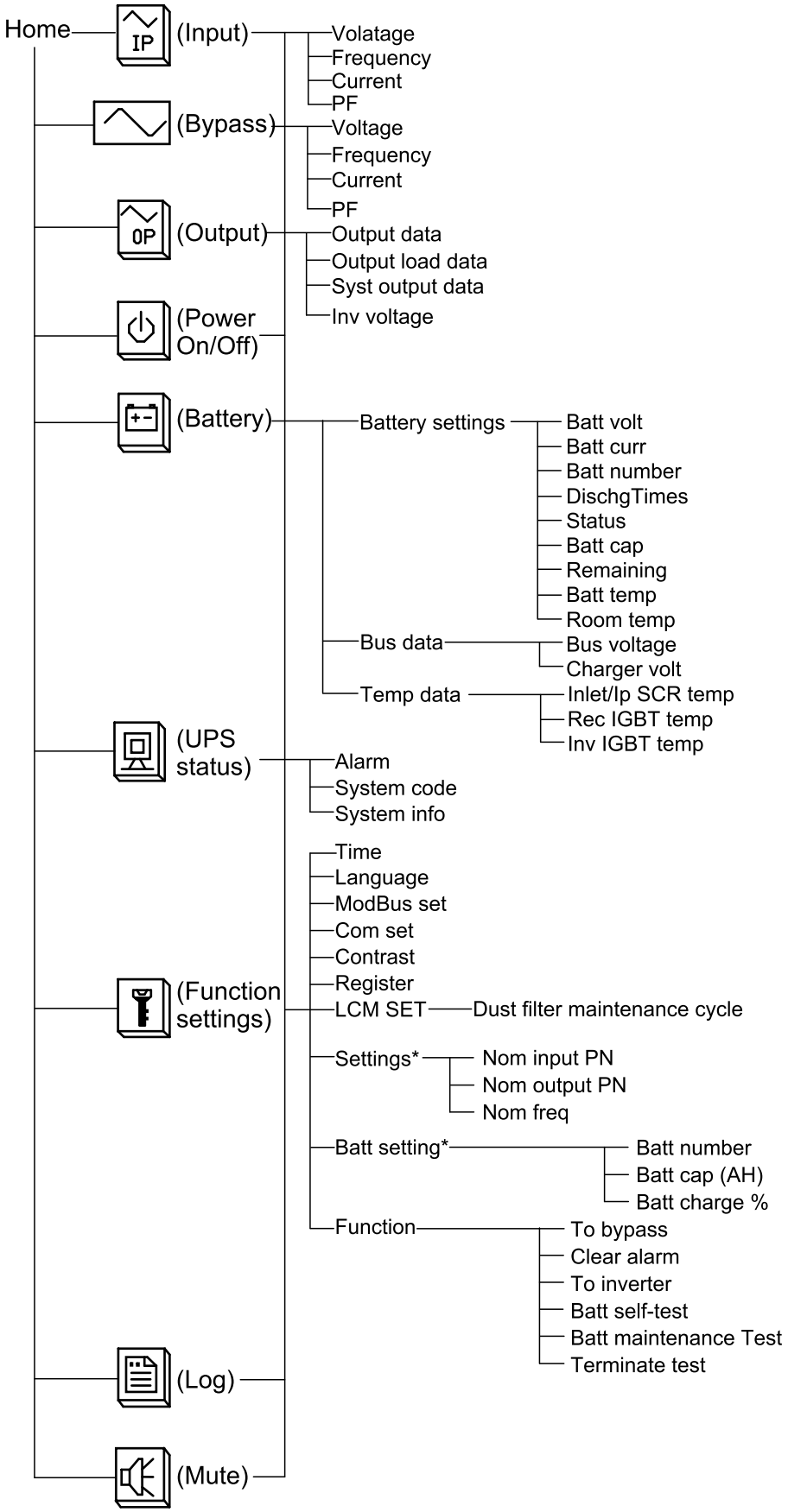

* This menu requires administrator login to access.

Some menus contain more submenus than described in this manual. These submenus are grayed out and are only for use by Schneider Electric to avoid unwanted load impacts. Other menu items can also be grayed out/not shown on the display if they are not relevant or not released yet for this particular UPS system.

Overview of Single UPS

UIB	Unit input breaker/switch
SSIB	Static switch input breaker/switch
UOB	Unit output breaker/switch
MBB	Maintenance bypass breaker/switch
BB	Battery breaker/switch

NOTE: Refer to Appendix: Switch/Breaker Details, page 56 for the disconnecting device type.

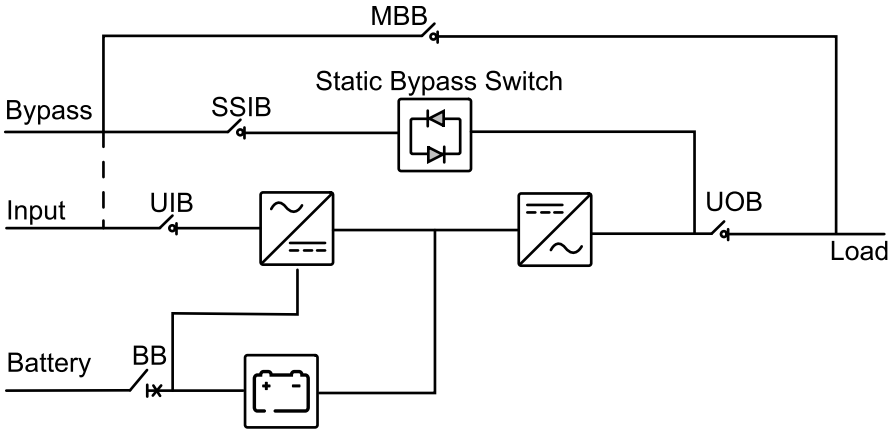

Overview of 1+1 Redundant Parallel System with Common Battery Bank

MIB	Mains input breaker/switch
BIB	Bypass input breaker/switch
UIB	Unit input breaker/switch
SSIB	Static switch input breaker/switch
UOB	Unit output breaker/switch
Ext. UOB	External unit output breaker/switch
MBB	Maintenance bypass breaker/switch
Ext. MBB	External maintenance bypass breaker/switch
BB1	Battery breaker/switch 1
BB2	Battery breaker/switch 2

NOTE: Refer to Appendix: Switch/Breaker Details, page 56 for the disconnecting device type.

NOTE: For UPS with internal batteries, the batteries must be removed and the internal battery breaker (BB) must be padlocked in the open (OFF) position.

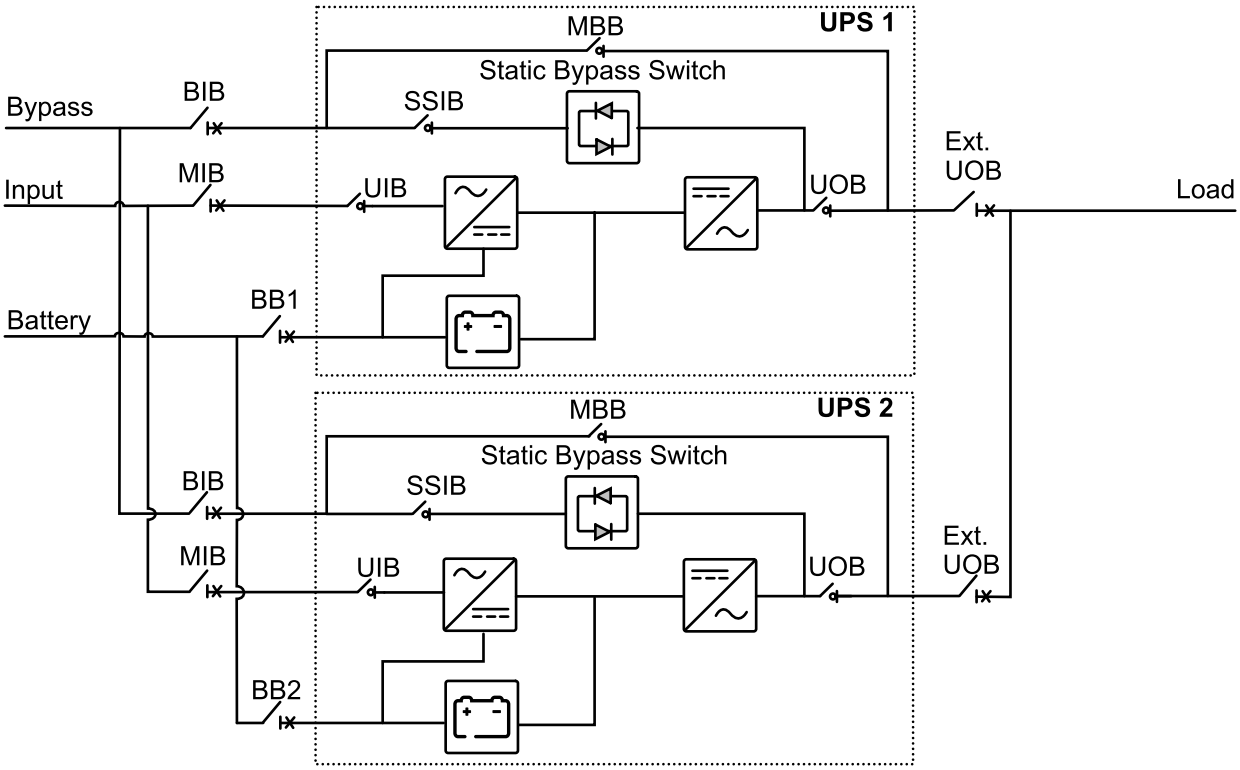

Overview of Parallel System

MIB	Mains input breaker/switch
BIB	Bypass input breaker/switch
UIB	Unit input breaker/switch
SSIB	Static switch input breaker/switch
UOB	Unit output breaker/switch
Ext. UOB	External unit output breaker/switch
MBB	Maintenance bypass breaker/switch
Ext. MBB	External maintenance bypass breaker/switch
SIB	System isolation breaker/switch
BB	Battery breaker/switch

NOTE: Refer to Appendix: Switch/Breaker Details, page 56 for the disconnecting device type.

NOTE: In parallel systems with an external maintenance bypass breaker Ext. MBB, the maintenance bypass breakers/switches MBB must be padlocked in the open (OFF) position.

UPSs for External Batteries

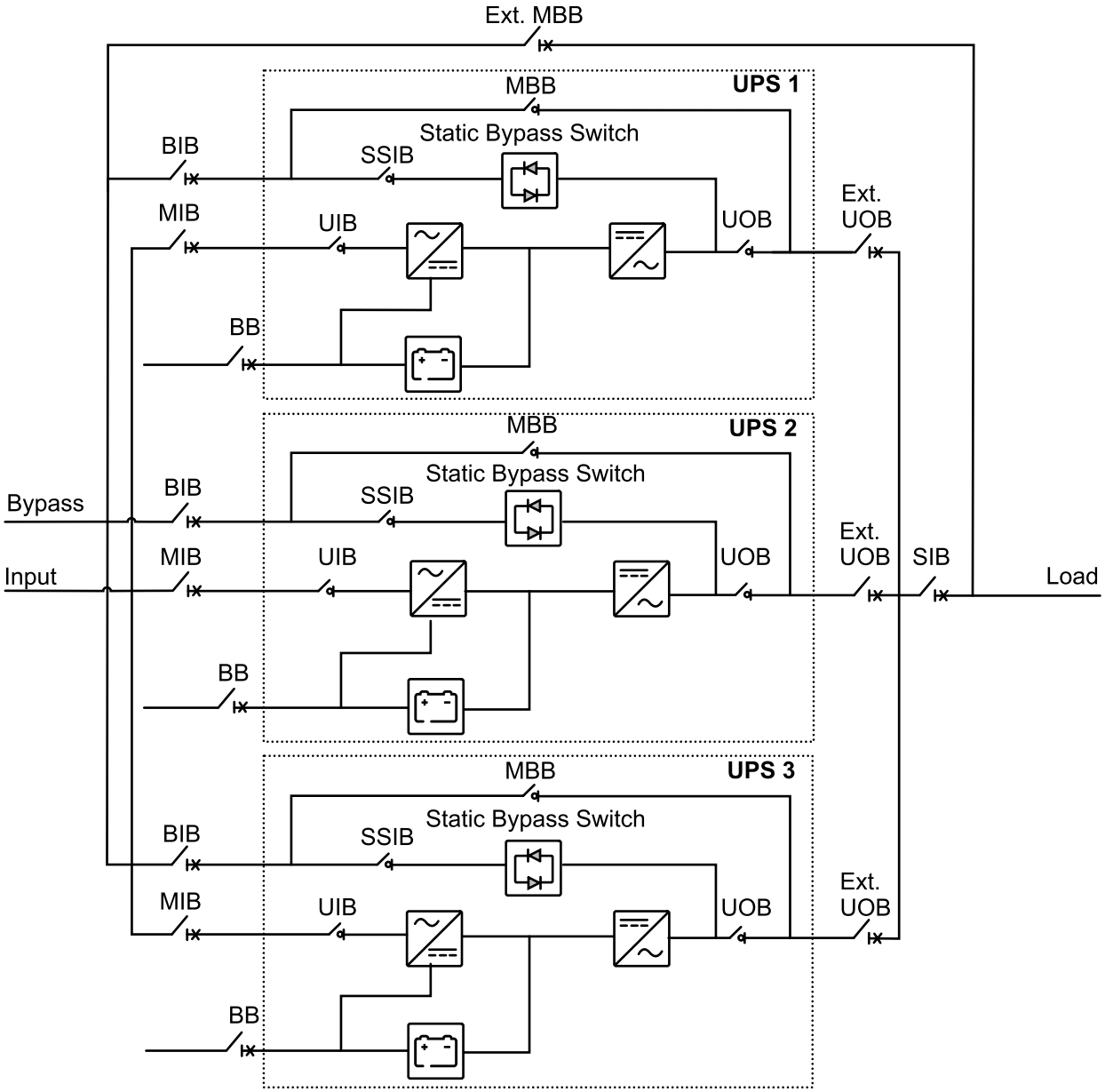

UPSs for Internal Batteries

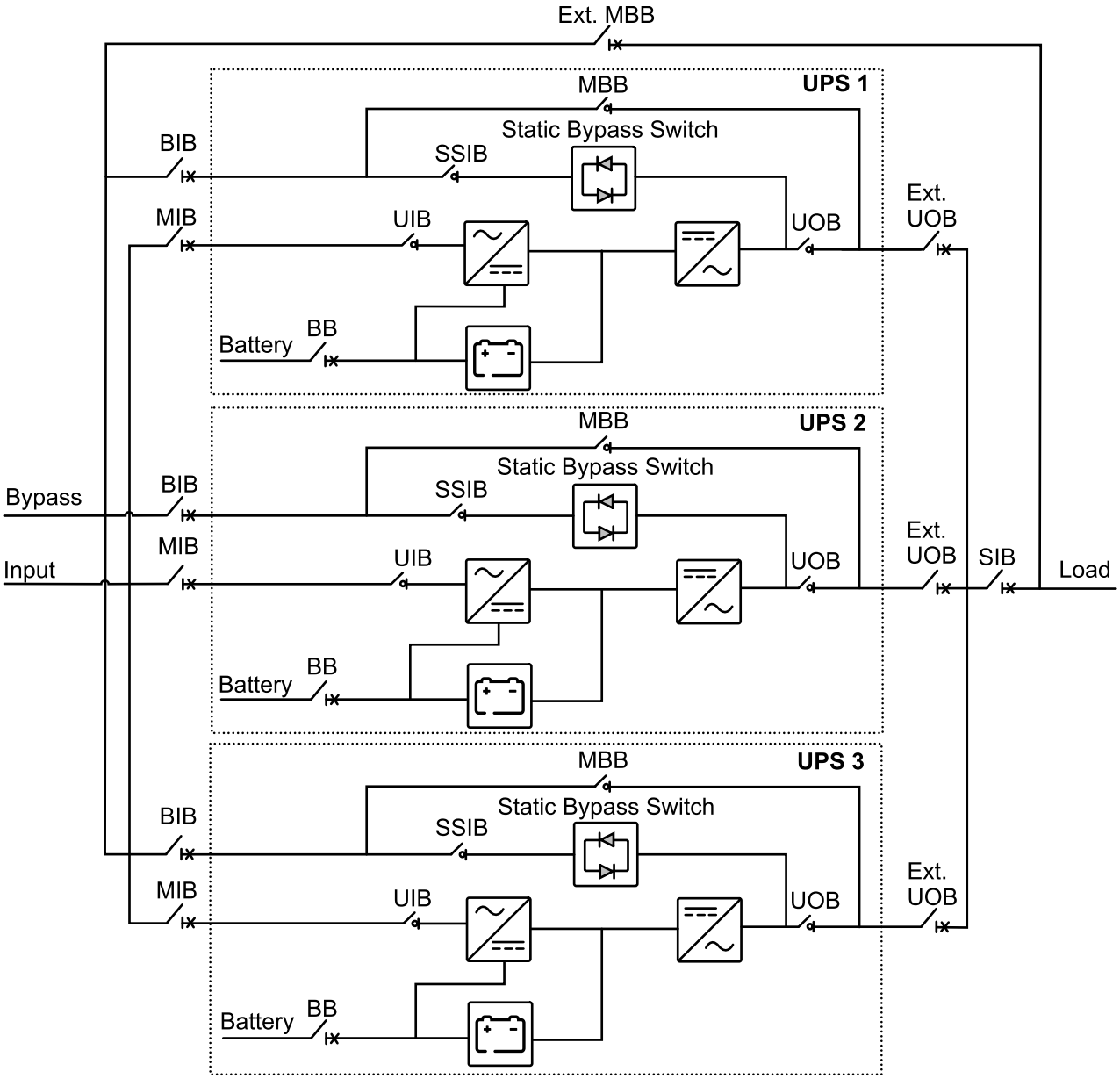

The impedance of the bypass paths need to be controlled in a parallel UPS system. When operating in bypass mode, the parallel load sharing is determined by the total impedance of the bypass path comprising cables, switchgear, static bypass switch, and cable formation.

NOTICE

RISK OF EQUIPMENT DAMAGE

To ensure correct load sharing in bypass operation in a parallel system, the following recommendations apply:

- The bypass cables must be the same length for all UPSs.
- The output cables must be the same length for all UPSs.
- The input cables must be the same length for all UPSs in a single mains system.
- Cable formation recommendations must be followed.
- The reactance of busbar layout in the bypass/input and output switchgear must be the same for all UPSs.

If the above recommendations are not followed the result can be uneven load sharing in bypass and overload of individual UPSs.

Failure to follow these instructions can result in equipment damage.

Location of Breakers - 400 V Systems

Location of Breakers in 3:3 UPSs

Rear View of the 10–15 kVA UPS for External Batteries

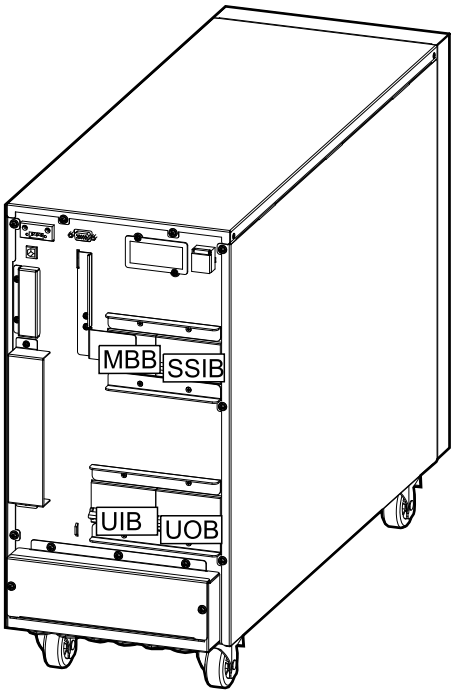

Rear View of the 10–15 kVA UPS with Internal Batteries

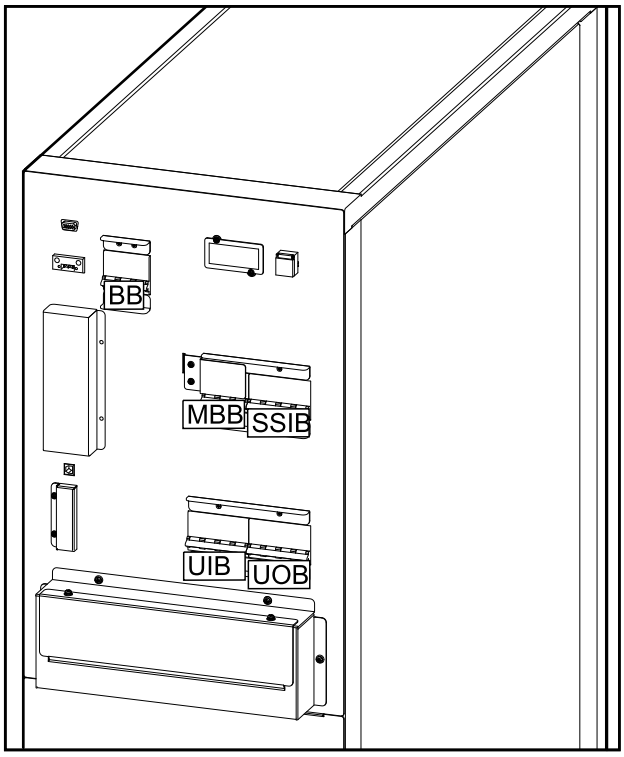

Rear View of the 20 kVA UPS for External Batteries

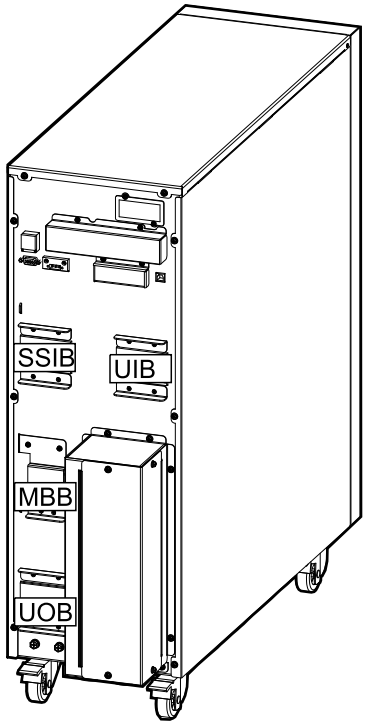

Rear View of the 20 kVA UPS with Internal Batteries

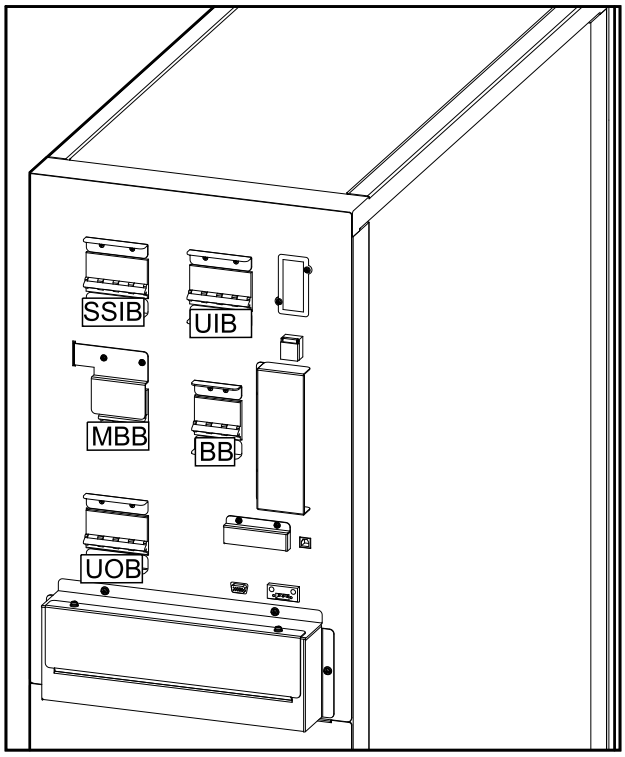

Rear View of the 30 kVA UPS for External Batteries

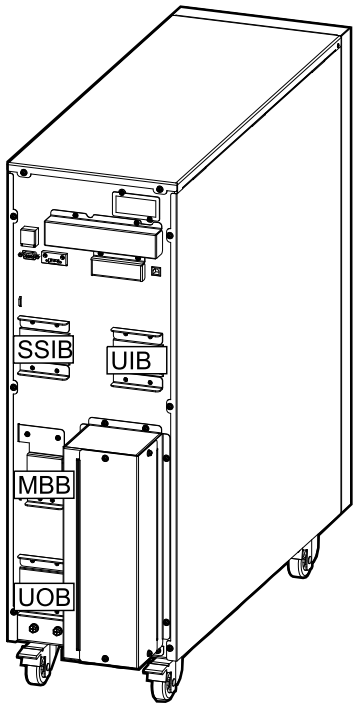

Rear View of the 30 kVA UPS with Internal Batteries

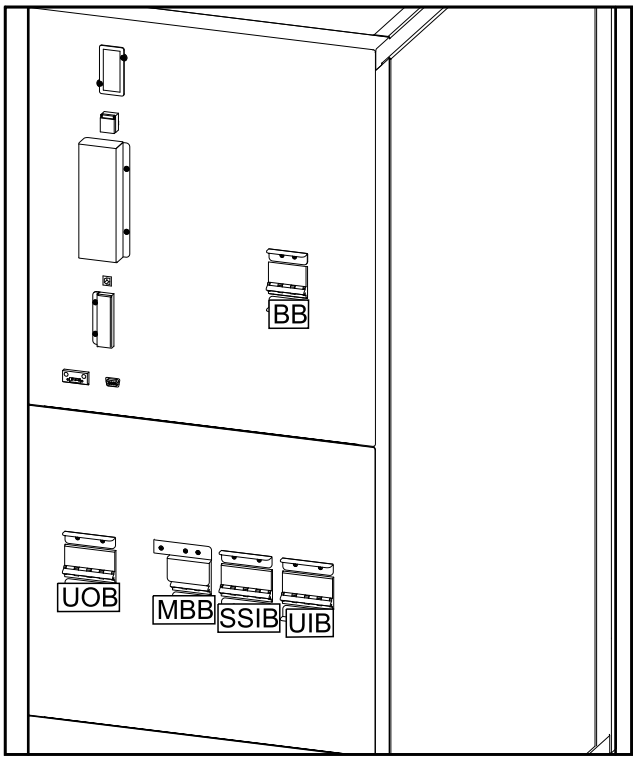

Rear View of the 40 kVA UPS for External Batteries

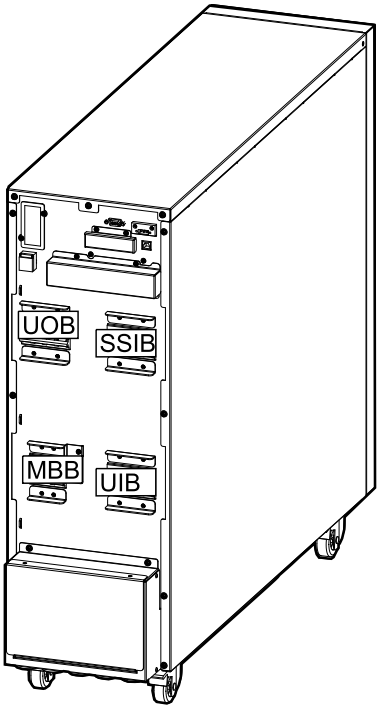

Rear View of the 40 kVA UPS with Internal Batteries

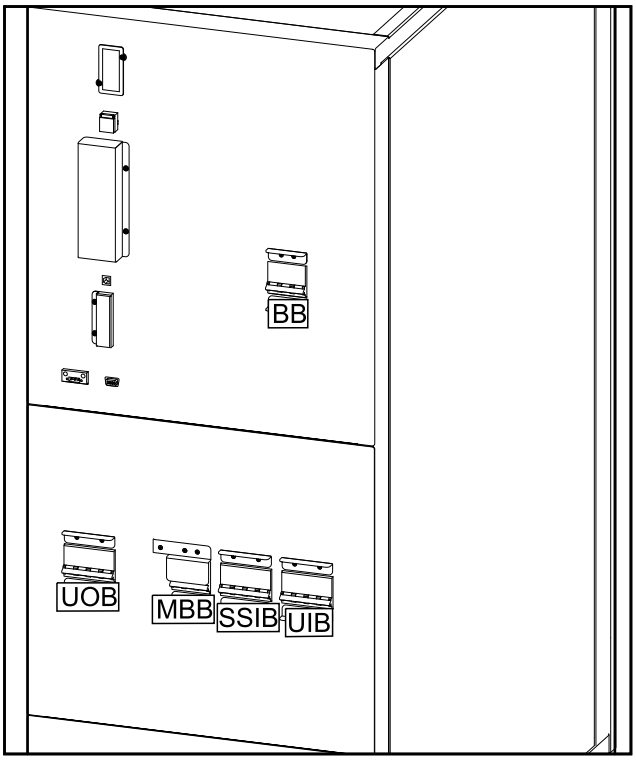

Location of Breakers in 3:1 UPSs

Rear View of the 10–15 kVA UPS for External Batteries

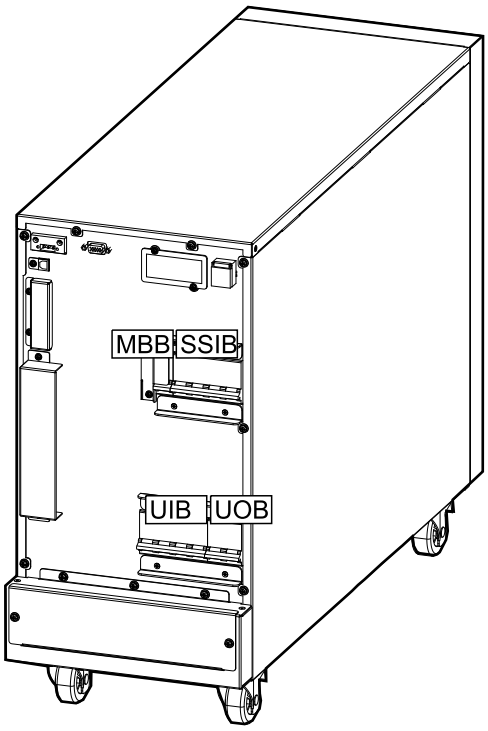

Rear View of the 10–15 kVA UPS with Internal Batteries

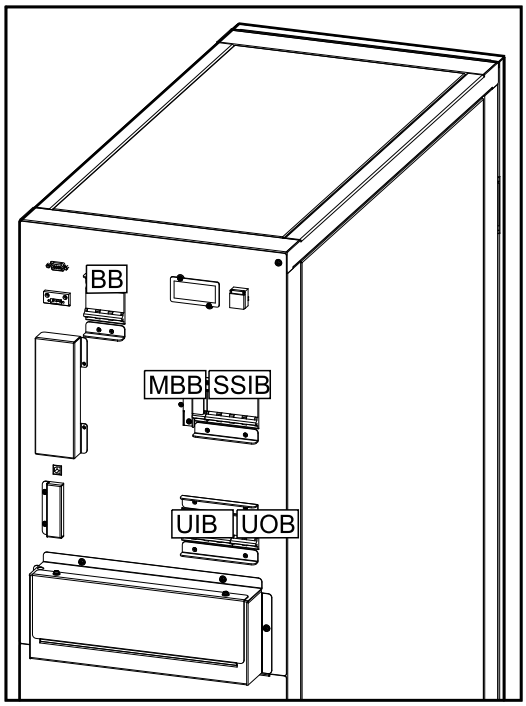

Rear View of the 20 kVA UPS for External Batteries

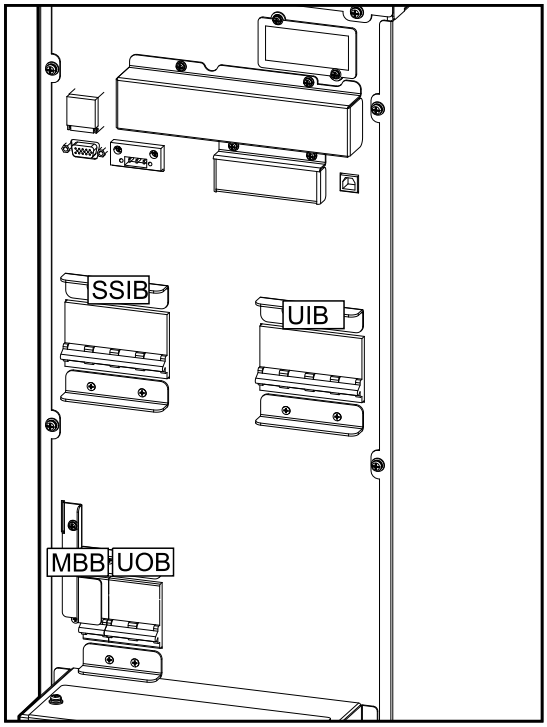

Rear View of the 20 kVA UPS with Internal Batteries

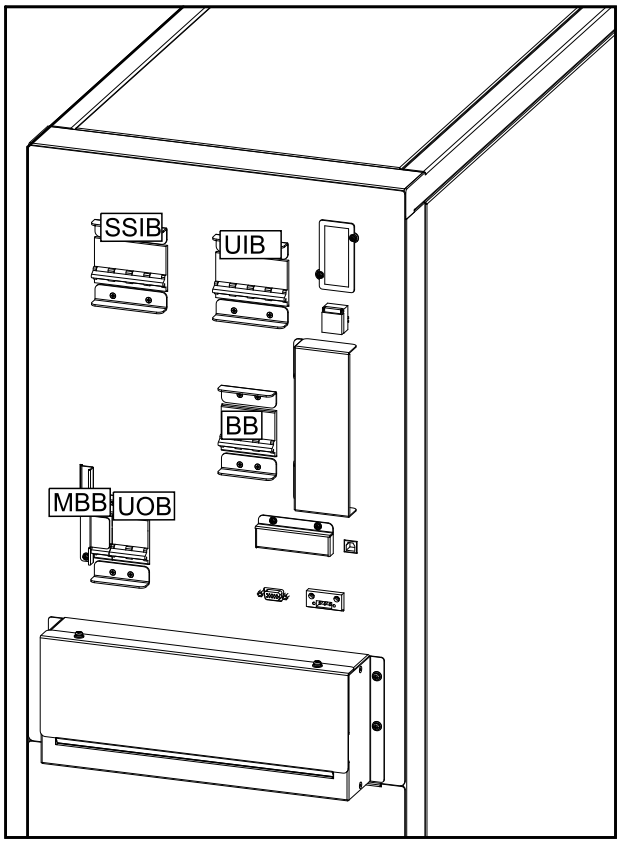

Rear View of the 30 kVA UPS for External Batteries

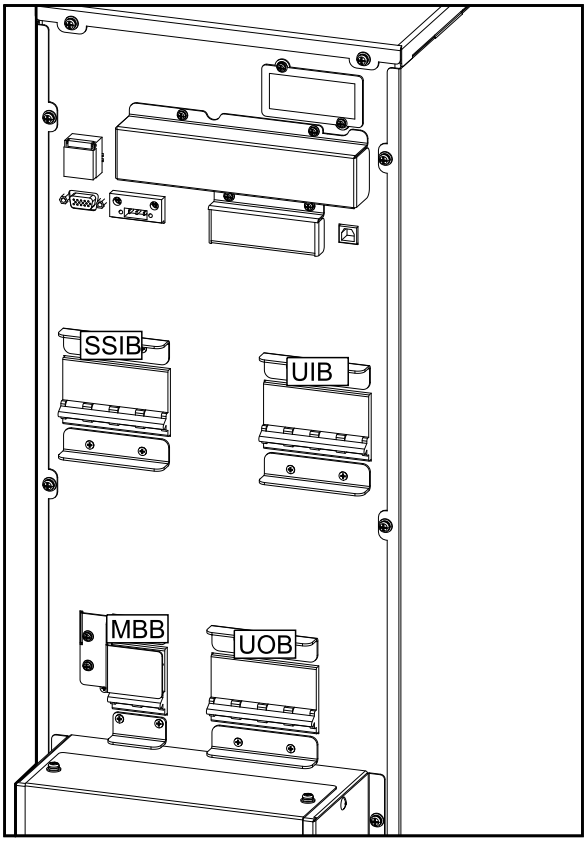

Rear View of the 30 kVA UPS with Internal Batteries

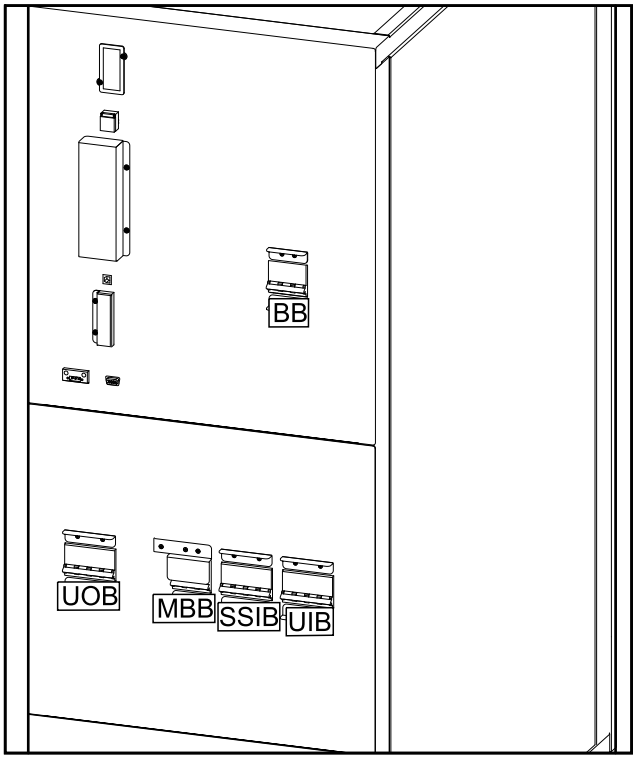

Location of Breakers - 208 V Systems

Location of Breakers in 3:3 UPSs

Rear View of the 10 kVA UPS for External Batteries

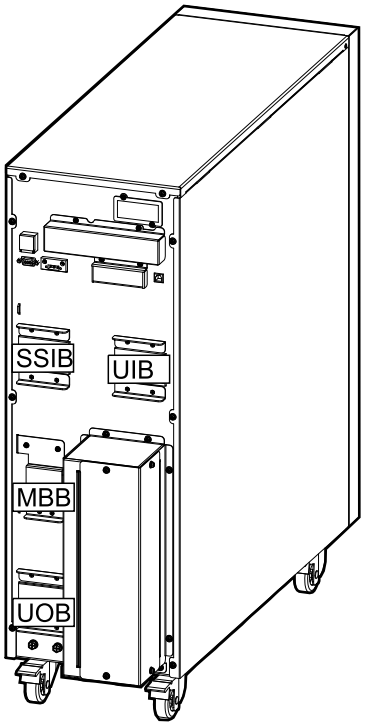

Rear View of the 10 kVA UPS with Internal Batteries

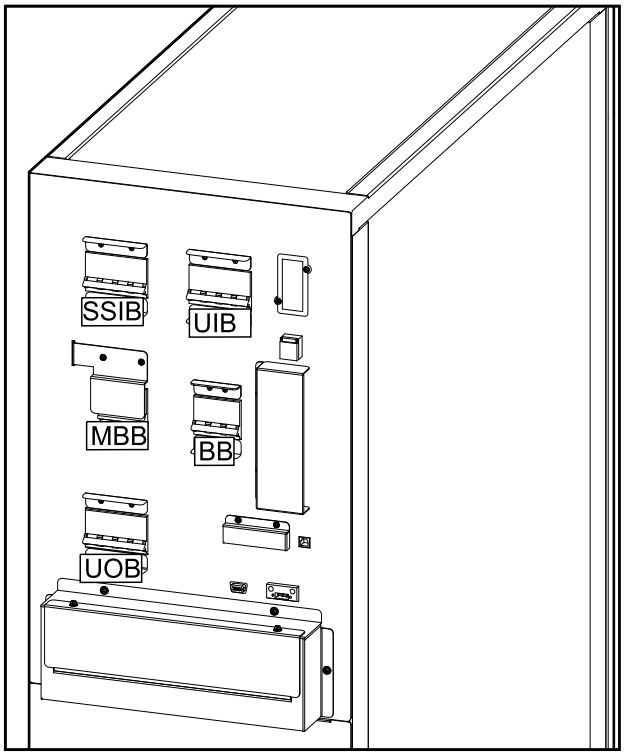

Rear View of the 15 kVA UPS for External Batteries

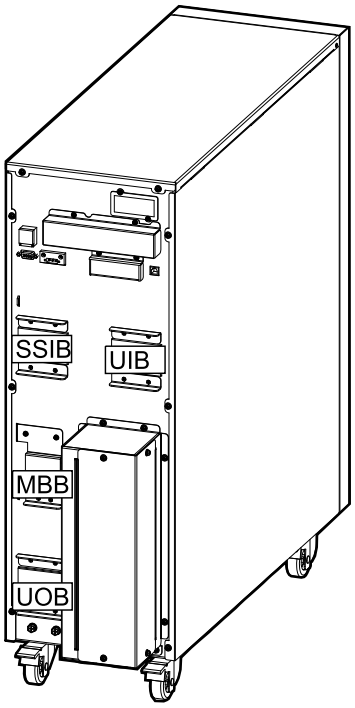

Rear View of the 15 kVA UPS with Internal Batteries

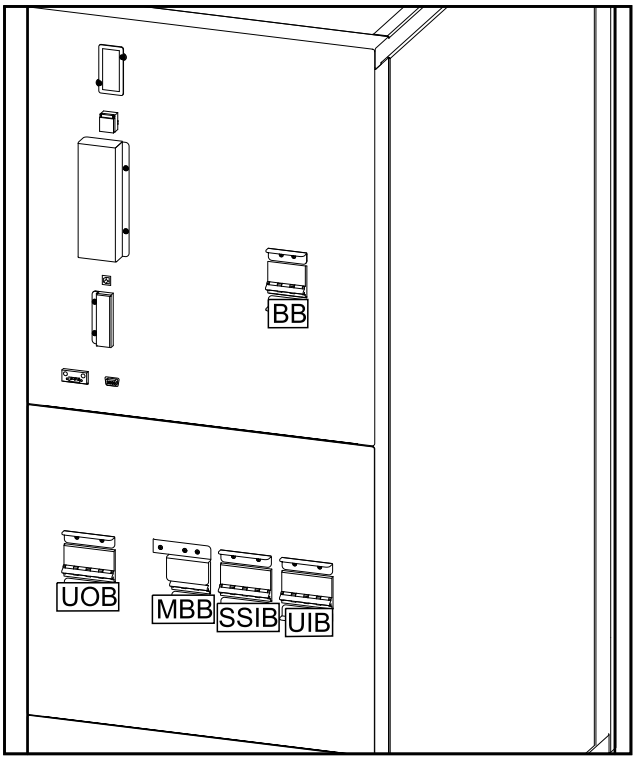

Rear View of the 20 kVA UPS for External Batteries

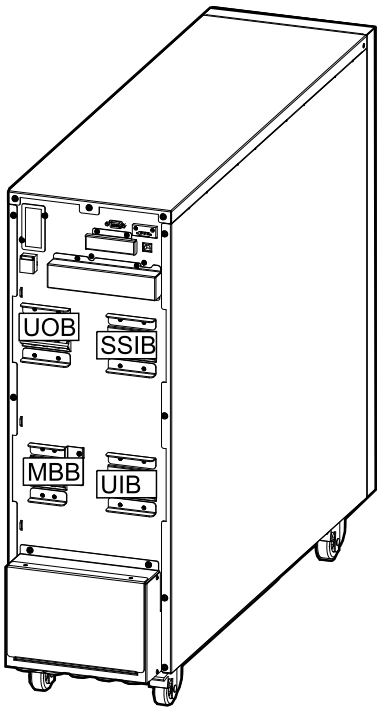

Rear View of the 20 kVA UPS with Internal Batteries

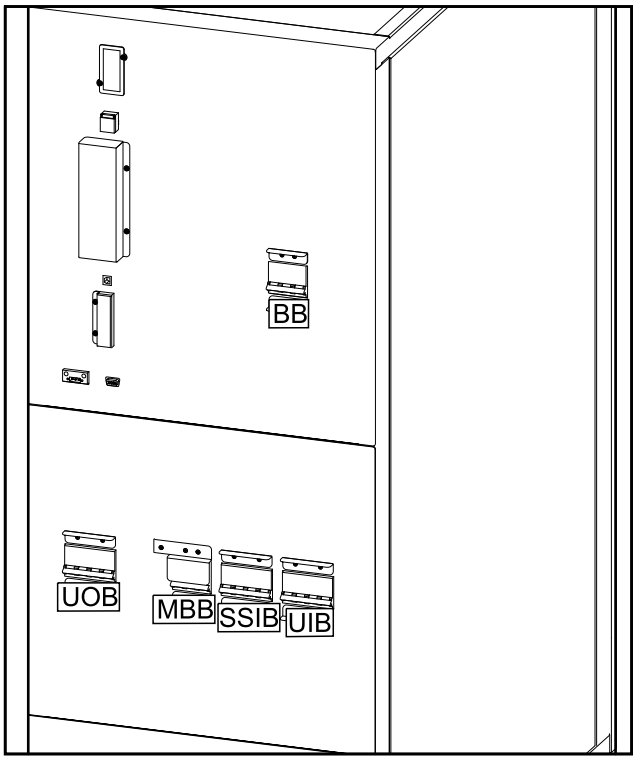

Operation Modes

Normal Mode

The UPS provides power to the connected load from mains. The UPS converts mains to conditioned power for the connected load while recharging the batteries (float or boost charge).

LED Status

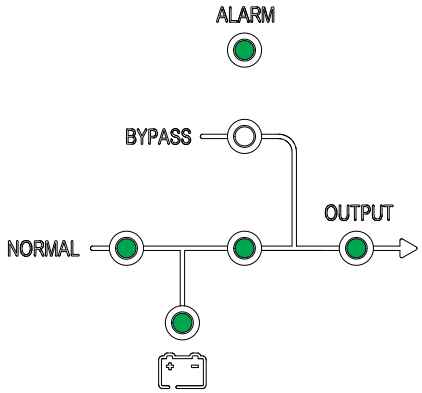

Power Flow

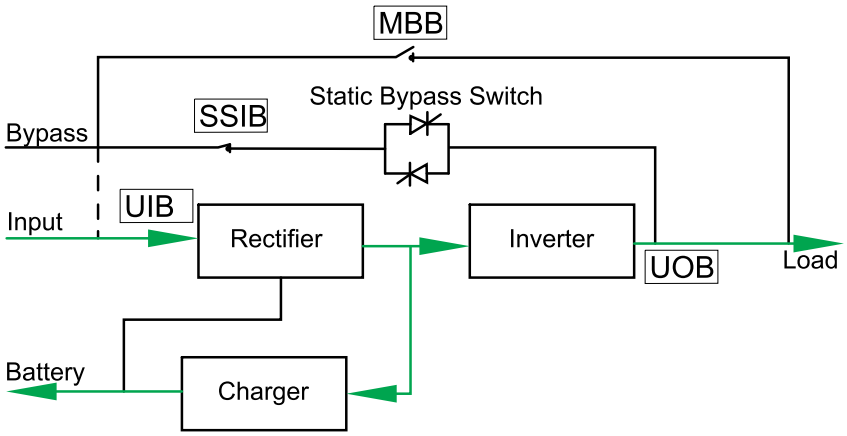

Battery Mode

The UPS transfers to battery mode if the mains supply fails. The UPS provides power to the connected load from the connected batteries for a finite period. When the mains supply returns, the UPS transfers back to normal mode.

LED Status

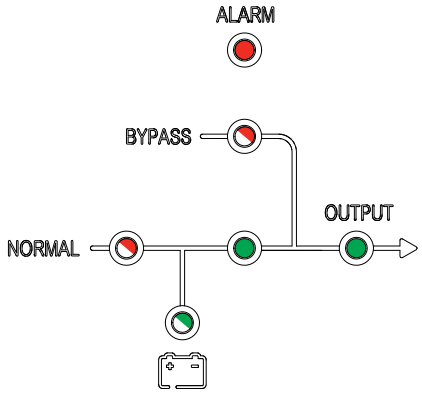

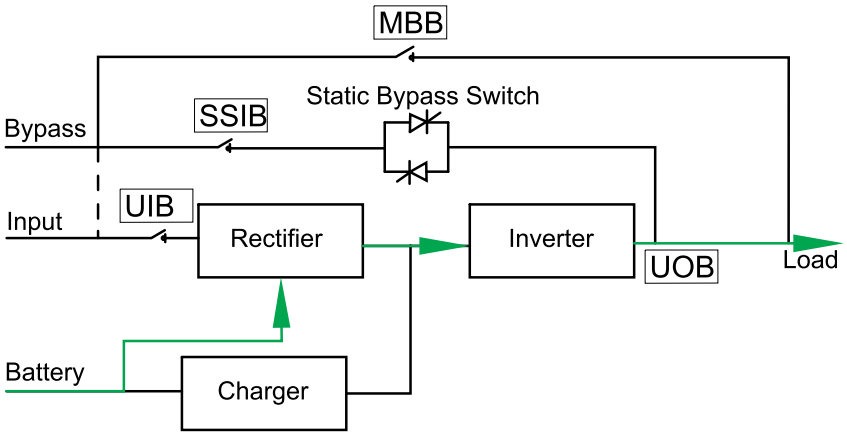

Static Bypass Mode

The UPS supplies the load with power from the bypass source. If the conditions for normal or battery mode are not met, the load will be transferred from the inverter to the bypass source with no interruption in power to the load.

LED Status

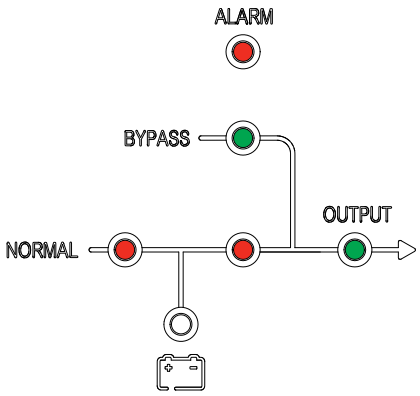

Power Flow

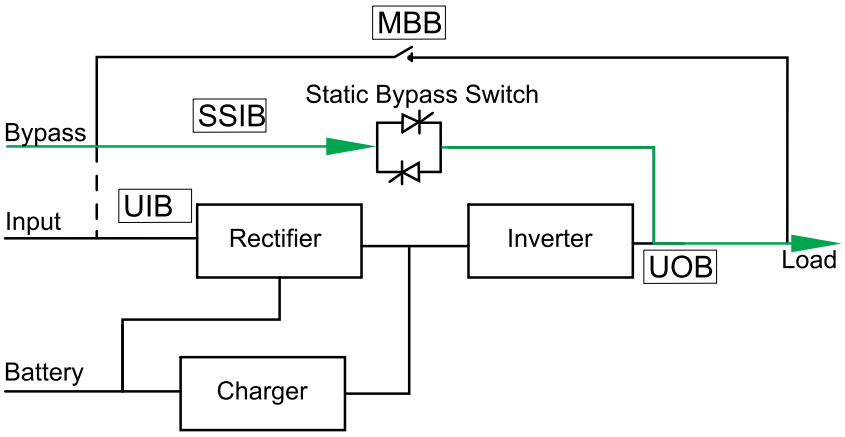

Maintenance Bypass Mode

In maintenance bypass mode, the mains is sent via the external MBB to the load. Battery backup is not available in maintenance bypass mode.

LED Status

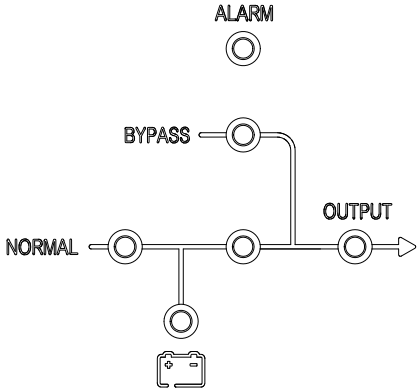

Power Flow

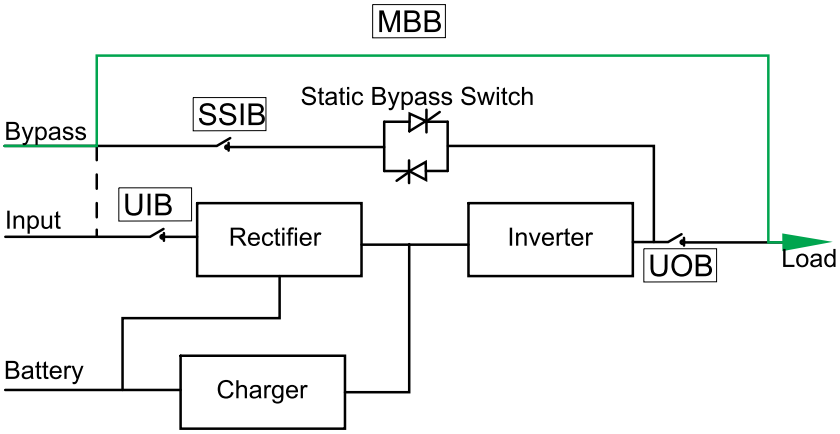

ECO Mode

In ECO mode the UPS is configured to use static bypass mode as the preferred operation mode under predefined circumstances. The inverter is in standby in ECO mode and in case of interruption to the mains, the UPS transfers to battery mode and the load is supplied from the inverter.

NOTE: This mode is disabled by default, please contact Schneider Electric to enable this mode. If ECO mode is enabled, you cannot exit this operation mode by using the display, please also contact Schneider Electric for assistance.

LED Status

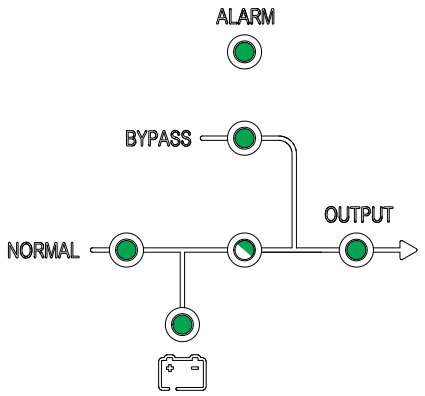

Power Flow

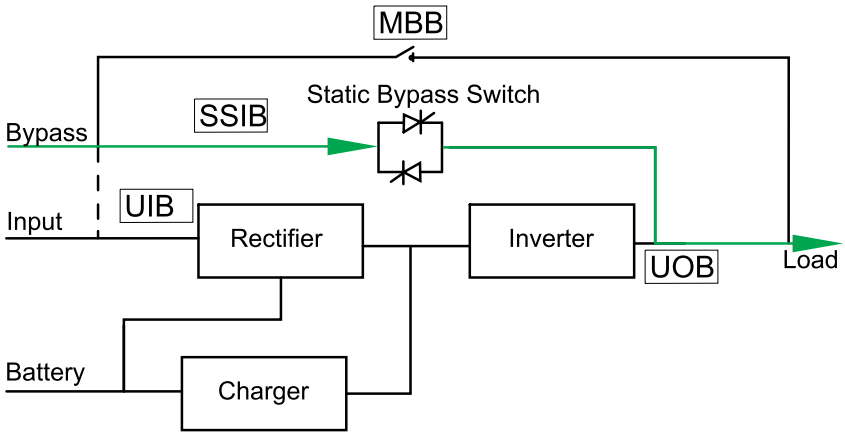

Autostart Mode

The batteries will reach end of discharge if the interruption to the mains is longer than the battery runtime. If the UPS is programmed to auto-restart after end of discharge, the system will automatically restart after a delay when the mains returns.

NOTE: If autostart is disabled, the inverter and bypass will not restart automatically when the mains return.

Frequency Converter Mode

In frequency converter mode, the UPS presents a stable output frequency (at 50 or 60 Hz) and the static bypass switch is not available.

NOTICE

RISK OF EQUIPMENT DAMAGE OR LOAD DROP

In frequency converter mode the UPS cannot run in static bypass or maintenance bypass mode. Before turning the UPS into frequency converter mode, you must contact a Schneider Electric-certified partner to make sure

- the SSIB and the MBB are in the OFF (opened) position (Schneider Electric strongly recommends to lock these with a padlock available from Schneider Electric)
- no cables are connected to the bypass terminals

Failure to follow these instructions can result in equipment damage.

LED Status

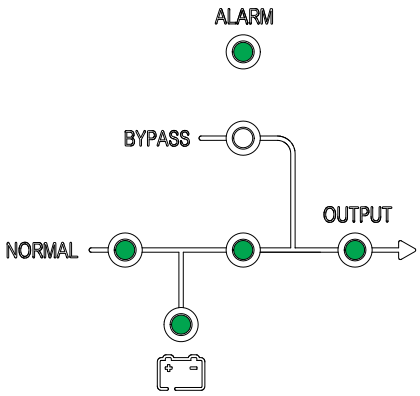

Power Flow

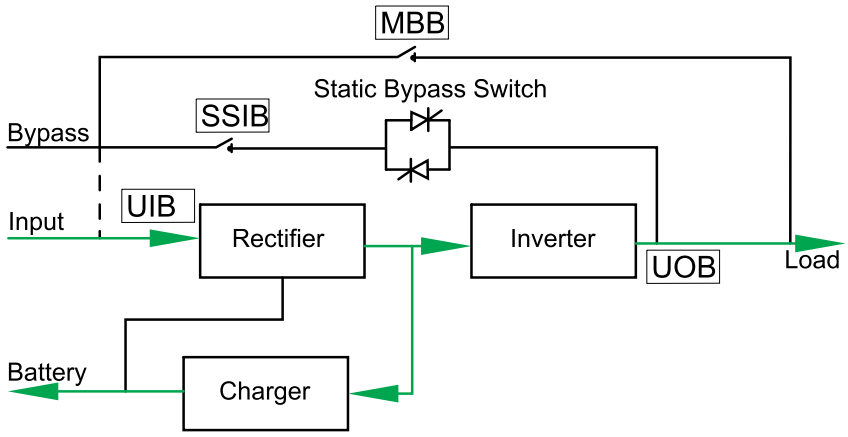

Operation Procedures

Initial Start-Up of the UPS Using the Wizard – Only Applicable to Single UPSs with Internal Batteries

⚠ DANGER

HAZARD OF ELECTRIC SHOCK, EXPLOSION, OR ARC FLASH

Parallel systems and UPSs for external batteries must only be started up by Schneider Electric.

Failure to follow these instructions will result in death or serious injury.

Before starting up the UPS, confirm that:

- The room temperature is between 0 °C to 40 °C
- The UPS has been installed according to the specified clearance dimensions.

1. Turn the unit input breaker UIB to the ON (closed) position.

   The display turns on.

2. Select to register the UPS or select **Skip** to continue. See Register Your Easy UPS 3S, page 37 for more information.

3. When the **Change language** prompt appears, do one of the following:
   - Select **Yes** and select the preferred language using the navigation keys. Select **Yes** again to confirm.
   - Select **No** to keep the current selection.

4. When the **Change voltage** prompt appears, do one of the following:
   - Select **Yes** and select the preferred voltage using the navigation keys. Select **Yes** again to confirm.
   - Select **No** to keep the current selection.

5. When the **Change freq.** prompt appears, do one of the following:
   - Select **Yes** and select the preferred output frequency using the navigation keys. Select **Yes** again to confirm.
   - Select **No** to keep the current selection.

6. When the **Change mode** prompt appears, do one of the following:
   - Select **Yes** and select **Normal mode**, **Parallel mode**, or **Frequency converter mode** using the navigation keys. Select **Yes** again to confirm.
   - Select **No** to keep the current selection.

7. When the **Change Batt setting** prompt appears, perform the following steps:
   a. **Enter password**: Enter the password 2334.
   b. **Batt number**: Verify the number of battery blocks is 20.
   c. **Batt cap (AH)**: Set the battery capacity to according to your battery configuration.
   d. **Batt charge %**: Set the battery charge percentage (between 1% and 15%).
   e. Select **Yes** to save the battery settings.

8. When the **Save new settings** prompt appears, select **Yes**.

9. When the **Disable wizard** prompt appears, do one of the following:
   – Select **Yes** to disable the wizard and go to the default screen.

     NOTE: Schneider Electric recommends to disable the wizard to allow for automatic start.
   – Select **No** to go to the default screen without disabling the wizard.

Post-requisite: For systems with internal batteries, go to Set the Battery Settings, page 39.

Start-Up Checklist – Only Applicable to Single UPSs with Internal Batteries

⚠ DANGER

HAZARD OF ELECTRIC SHOCK, EXPLOSION, OR ARC FLASH

Parallel systems and UPSs for external batteries must only be started up by Schneider Electric.

Failure to follow these instructions will result in death or serious injury.

- I have positioned the UPS according to the installation manual and the recommended clearances are respected.
- I have verified that the environmental conditions including temperature, humidity, and airflow stated in the installation manual are respected.
- I have verified that the input voltage and frequency are within the tolerances specified in the installation manual.
- I have verified that the upstream protection is in accordance with the recommendations in the installation manual and that the power cables have been connected correctly.
- I have installed the batteries as specified in the installation manual.
- I have followed the Initial Start-Up of the UPS Using the Wizard – Only Applicable to Single UPSs with Internal Batteries, page 26.
- I have made all settings (including battery settings and life cycle monitoring) described in this manual.
- I have completed all functional tests successfully (normal mode, battery mode, and static bypass mode).
- I have successfully entered the UPS passcode provided by Schneider Electric.
- I confirm the installation has been completed and the UPS is running in normal mode and is powering the load.

Start Up a Single UPS in Normal Mode

NOTE: When the UPS starts, the stored settings will be used.

NOTE: The log can be accessed during start-up.

1. Check that all breakers are in the OFF (open) position.
2. Turn the static switch input breaker SSIB to the ON (closed) position.

   The display turns on and the Home screen is shown.

3. Turn the unit output breaker UOB to the ON (closed) position.

   Wait approximately 2030 seconds until the bypass and output LEDs turn green. The UPS starts up in static bypass mode.

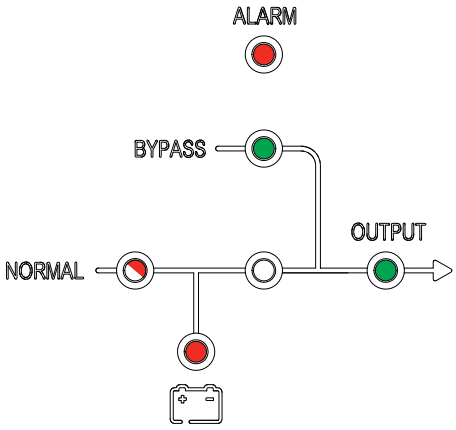

4. Turn the unit input breaker UIB to the ON (closed) position.

   The rectifier ramps up and the LEDs on the user interface show as follows:

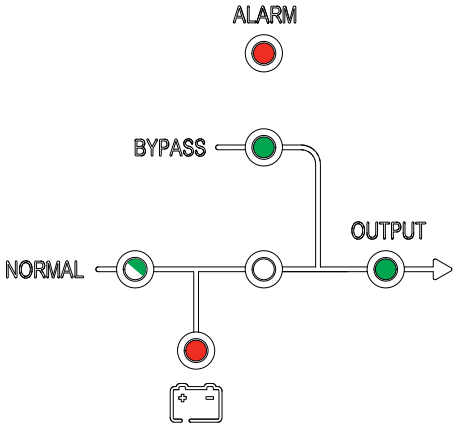

5. When the rectifier LED turns steady green, the inverter synchronizes with bypass.

   The LEDs on the user interface show as follows:

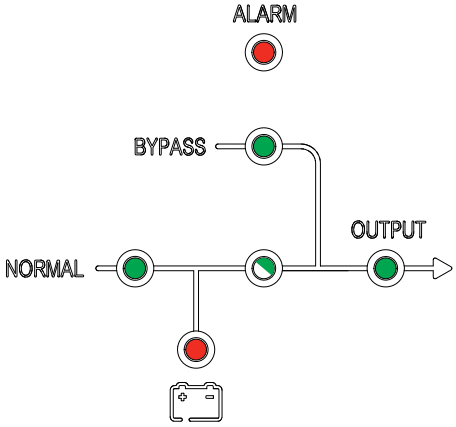

6. Wait approximately one minute until the inverter LED turns steady green, the UPS transfers automatically from static bypass mode to normal mode.

   The LEDs on the user interface show as follows:

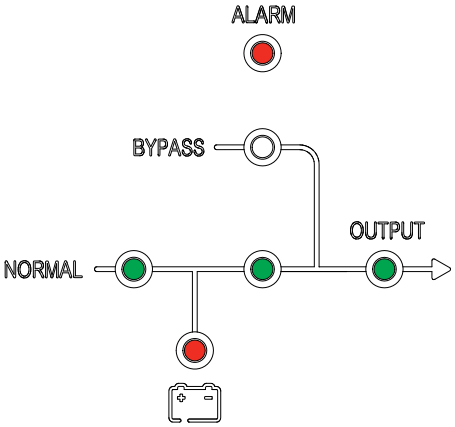

7. Turn the battery breaker(s) BB to the ON (closed) position.

   The LEDs on the user interface show as follows:

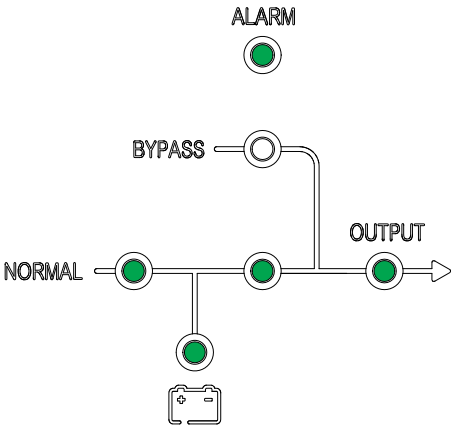

   The UPS is now in normal mode.

Transfer a Single UPS from Normal Mode to Static Bypass Mode

1. On the display, select and then select **Function > To bypass**.

   The LEDs on the user interface show as follows:

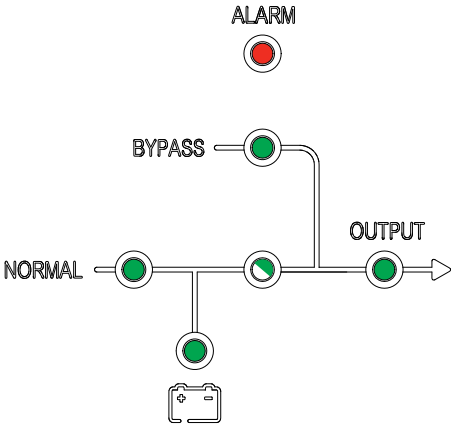

Transfer a Single UPS from Static Bypass Mode to Normal Mode

NOTE: The UPS will normally transfer automatically from static bypass to normal mode. This procedure can be used to manually transfer to normal mode if the bypass frequency is above the specified limits.

1. On the display, select and then select **ESC bypass**.

   The LEDs on the user interface show as follows:

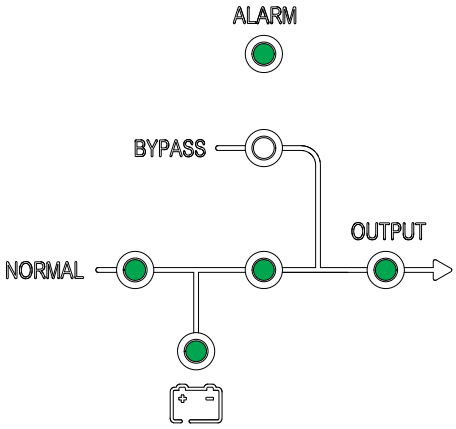

Transfer a Single UPS from Normal Mode to Maintenance Bypass Mode

1. On the display, select and then select **Function > To bypass**.
2. Remove the cover from the maintenance bypass breaker MBB. Refer to Location of Breakers - 400 V Systems, page 16.

   NOTE: When the cover of the MBB is removed, the system automatically transfers to maintenance bypass mode.
3. Turn the maintenance bypass breaker MBB to the ON (closed) position.

   The load is now supplied via the maintenance bypass breaker.
4. Turn the battery breaker(s) BB to the OFF (open) position.
5. Turn the unit input breaker UIB to the OFF (open) position.
6. Turn the static switch input breaker SSIB to the OFF (open) position.
7. Turn the unit output breaker UOB to the OFF (open) position.

8. For the UPS with internal batteries, disconnect all batteries on the front of the UPS.

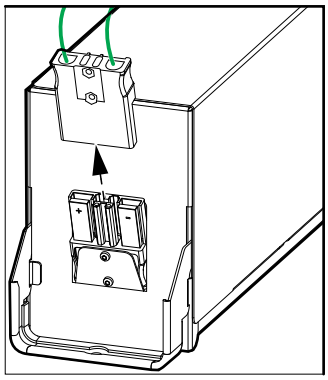

⚠ DANGER

HAZARD OF ELECTRICAL SHOCK, EXPLOSION OR ARC FLASH

- Wait at least 5 minutes before removing the cover of the UPS after the display has turned off to allow for the capacitors to fully discharged.
- Always measure for hazardous voltages on all terminals before working on the UPS.

Failure to follow these instructions will result in death or serious injury.

9. Do not reinstall the maintenance bypass breaker MBB cover. Leave the cover removed when the UPS is in Maintenance Bypass Mode.

Transfer a Single UPS from Maintenance Bypass Mode to Normal Mode

1. Check that:
   - all UPS breakers (unit input breaker UIB, static switch input breaker SSIB, and unit output breaker UOB and the external unit output breaker Ext. UOB are in the OFF (open) position.
   - the battery breakers BB are in the OFF (open) position.
   - the maintenance bypass breaker MBB is in the ON (closed) position.
   - the maintenance bypass breaker MBB cover is removed.
2. Turn the static switch input breaker SSIB to the ON (closed) position.

   The display turns on and the Home screen is shown.
3. Turn the unit output breaker UOB to the ON (closed) position.

   The UPS starts up in static bypass mode.
4. Turn the unit input breaker UIB to the ON (closed) position.

   The rectifier ramps up.
5. When the rectifier LED turns steady green, the inverter synchronizes with bypass.
6. Turn the battery breaker(s) BB to the ON (closed) position.
7. When the Bypass LED is steady green, turn the maintenance bypass breaker MBB to the OFF (open) position.

8. Reinstall the cover on the maintenance bypass breaker MBB. Refer to Location of Breakers - 400 V Systems, page 16.

   NOTE: The system will not transfer to normal mode before the maintenance bypass cover has been reinstalled.

9. On the display select and then select **Function > Clear alarm**.

   NOTE: The system will not transfer to normal mode before the maintenance bypass cover has been reinstalled and the alarm has been cleared.

10. After approximately 60 seconds, the UPS will automatically transfer to normal mode.

    The LEDs on the user interface show as follows:

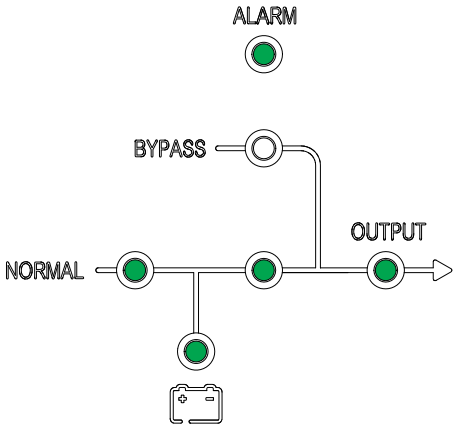

Transfer a Parallel System from Normal Mode to Maintenance Bypass Mode

1. On all UPS displays, select and then select **Function > To bypass**.

   The parallel system will transfer to static bypass mode.

2. Turn the external maintenance bypass breaker Ext. MBB to the ON (closed) position.

   The load is now supplied via the external maintenance bypass breaker.

3. Turn the battery breakers BB of all UPSs to the OFF (open) position.

4. Disconnect the battery relay from the display by selecting the battery symbol and selecting **Batt relay control ON/OFF** and confirm to turn off the battery relay. Verify that the **Relay status** is now off.

5. Open external battery breaker if external batteries are connected.

6. Turn the mains input breakers MIB and the bypass input breakers BIB of all UPSs to the OFF (open) position.

7. Turn the system isolation breaker SIB to OFF (open) position.

8. For the UPS with internal batteries, disconnect all batteries on the front of the UPS.

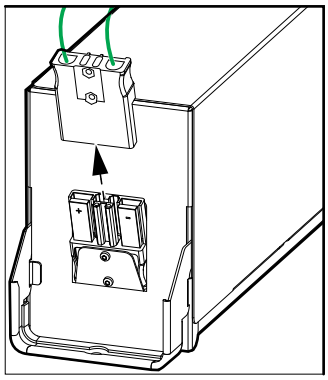

DANGER

HAZARD OF ELECTRICAL SHOCK, EXPLOSION OR ARC FLASH

- Wait at least 5 minutes before removing the cover of the UPS after the display has turned off to allow for the capacitors to fully discharged.
- Always measure for hazardous voltages on all terminals before working on the UPS.

Failure to follow these instructions will result in death or serious injury.

Transfer a Parallel System from Maintenance Bypass Mode to Normal Mode

1. Check that:
   - all UPS breakers (unit input breaker UIB, static switch input breaker SSIB, and unit output breaker UOB) and the external unit output breaker Ext. UOB are in the ON (closed) position
   - the battery breakers BB are in the OFF (open) position
2. Reconnect the internal batteries of all UPSs and set all the battery breakers BB in the modular battery cabinets (if present) to the ON (closed) position.
3. Turn the system isolation breaker SIB to ON (closed) position.
4. Turn the bypass input breakers BIB of all UPSs to the ON (closed) position.

   Wait approximately 2030 seconds until the bypass and the output LEDs turn green.
5. Turn the external maintenance bypass breaker Ext. MBB to the OFF (open) position.

   NOTE: If the parallel system has dry contacts with Maint CB signal, select and then select **Function > Clear alarm** on all UPS displays.
6. Turn the mains input breakers MIB of all UPSs to the ON (closed) position.

   The rectifier ramps up. After UPS self-test, the battery relay closes automatically.
7. Close the external battery breaker if external batteries are part of the system.
8. When the rectifier LED turns steady green, the inverter synchronizes with bypass.
9. When the inverter LED turns steady green, the parallel system automatically transfers from static bypass to normal mode.

10. Turn the battery breakers BB of all UPSs to the ON (closed) position.

    The LEDs on the user interfaces show as follows:

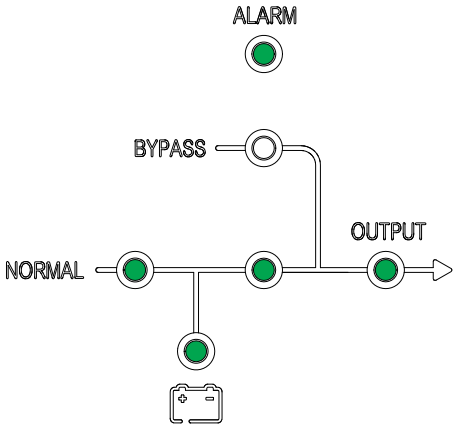

The parallel system is now in normal mode.

Isolate a Single UPS from the Parallel System

Use this procedure to shut down one UPS in a running parallel system.

NOTE: Before initiating this procedure, ensure that the remaining UPS units can supply the load.

1. On the display select and then select confirm to power off the UPS.
2. Turn the battery breaker(s) BB of the UPS to the OFF (open) position.
3. Disconnect the battery relay from the display by selecting the battery symbol and selecting **Batt relay control ON/OFF** and confirm to turn off the battery relay. Verify that the **Relay status** is now off.
4. Open external battery breaker if external batteries are connected.
5. Turn the mains input breaker MIB of the UPS to the OFF (open) position.
6. Turn the bypass input breaker BIB of the UPS to the OFF (open) position.
7. Turn the external unit output breaker Ext. UOB of the UPS to the OFF (open) position.

8. For the UPS with internal batteries, disconnect all batteries on the front of the UPS.

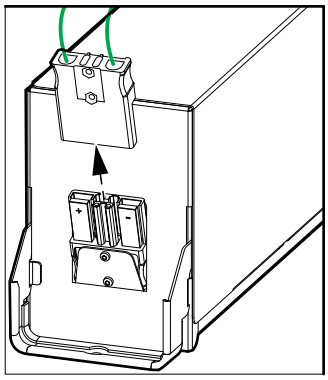

DANGER

HAZARD OF ELECTRICAL SHOCK, EXPLOSION OR ARC FLASH

- Wait at least 5 minutes before removing the cover of the UPS after the display has turned off to allow for the capacitors to fully discharged.
- Always measure for hazardous voltages on all terminals before working on the UPS.

Failure to follow these instructions will result in death or serious injury.

Start Up and Add a UPS to a Running Parallel System

Use this procedure to start up a UPS and add it to a running parallel system.

IMPORTANT: Before a UPS can be added to a parallel system, the parallel system must be configured by Schneider Electric.

1. On the new UPS check that:
   - all UPS breakers (unit input breaker UIB, static switch input breaker SSIB, and unit output breaker UOB) and the external unit output breaker Ext. UOB are in the ON (closed) position
   - the battery breaker(s) BB are in the OFF (open) position
2. Turn the external unit output breaker Ext. UOB of the UPS to the ON (closed) position.
3. Turn the mains input breaker MIB and the bypass input breaker BIB of the UPS to the ON (closed) position.

   The display turns on and the Home screen is shown.

   The LEDs on the user interface show as follows:

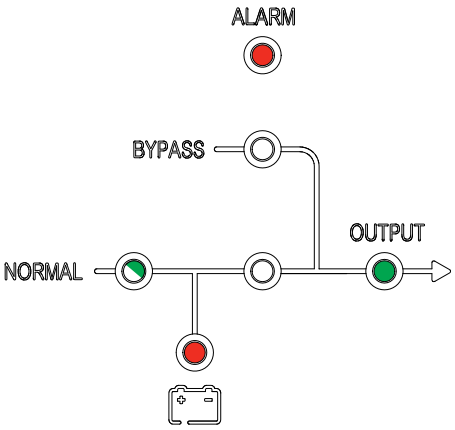

4. When the rectifier LED turns steady green, the UPS transfers to static bypass mode.

   The LEDs on the user interface show as follows:

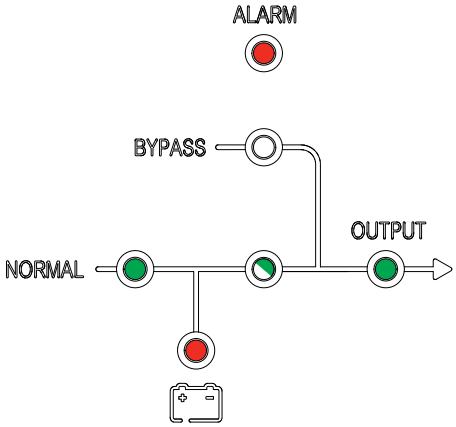

5. When the inverter LED turns steady green, the UPS automatically transfers from static bypass to normal mode and joins the running parallel system.

   The LEDs on the user interface show as follows:

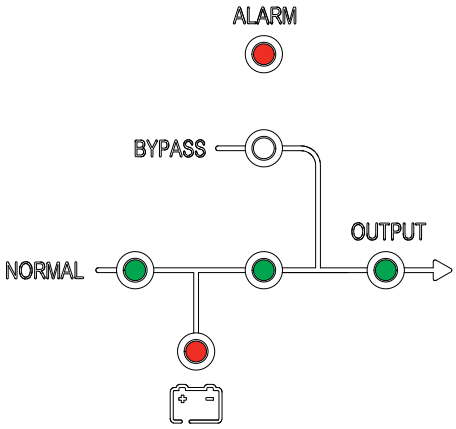

6. Turn the battery breaker(s) BB of the UPS to the ON (closed) position.

   The LEDs on the user interface show as follows:

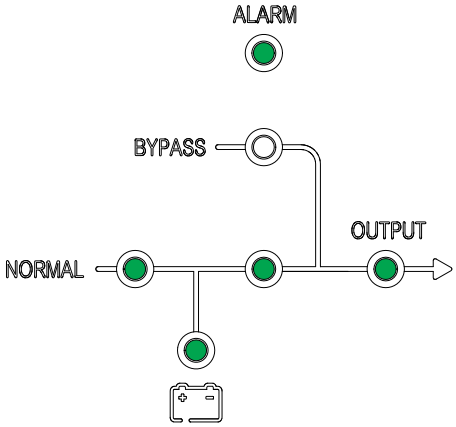

7. Verify correct load sharing between the parallel UPS units.

Configuration

Register Your Easy UPS 3S

NOTE: The single Easy UPS 3S can also be registered using the mySchneider app which can be downloaded from App Store and Google Play.

1. When prompted for registration, go to www.schneider-electric.com/contactsupport to find your local service contact number.

Please contact Schneider
Electric to register
and activate the warranty
www.schneider-electric.com/
contactsupport

2. On the display, select and then select **Register**[1].
3. Call Schneider Electric and provide your four-digit activation code.
4. Type in the registration code provided by Schneider Electric.

Register	
Activation	XXXX
Registration code	
Register Later	

Set the Display Language

1. On the display, select and then select **Language**.
2. Select your language from the list:

en: English	**pt**: Portuguese Brazilian
fr: French	**ru**: Russian
cn: Simplified Chinese	**de**: German
it: Italian	**es**: European Spanish

1. You can also select **Register Later** to postpone your registration

Set the Date and Time

1. On the display, select and then select **Time**.
2. Set the date and time.

Set the UPS Settings

NOTICE

RISK OF EQUIPMENT DAMAGE

Only trained personnel following the required training course may undertake modifications to UPS system parameters.

Failure to follow these instructions can result in equipment damage.

1. On the display, select and then select **Setting**.
2. Enter the password **3526**.

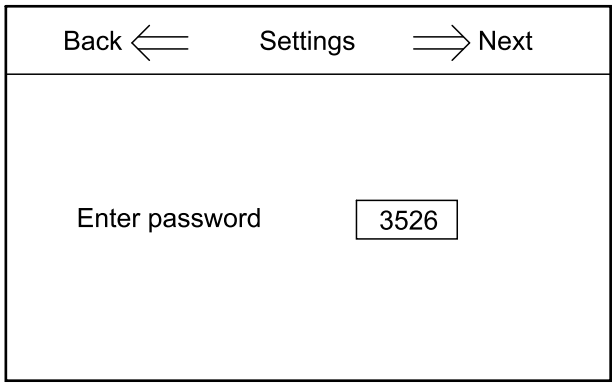

3. Set the nominal input voltage (phase-neutral), the nominal output voltage (phase-neutral), and the nominal frequency.

   NOTE: Nom input PN and **Nom output PN** must have the same voltage rating.

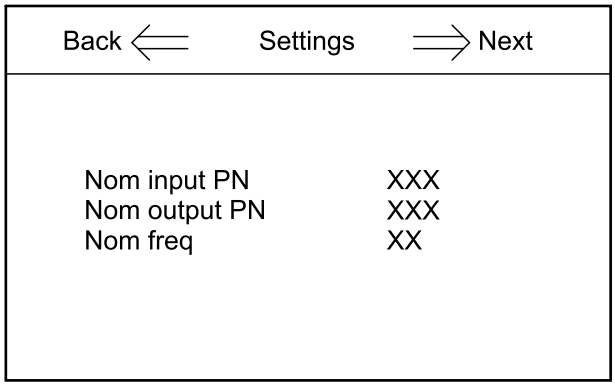

4. Restart the UPS to activate the settings.

Set the Battery Settings

NOTICE

RISK OF EQUIPMENT DAMAGE

- Only trained personnel following the required training course may undertake modifications to UPS system parameters.
- The battery parameters must set according to the actual installation before starting up the UPS.

Failure to follow these instructions can result in equipment damage.

1. On the display, select and then select **Batt Settings**.
2. Enter the password **2334**.

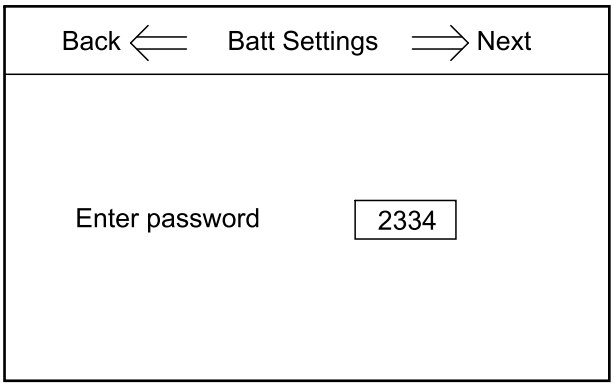

3. Set the battery settings:

   NOTE: When the **Nom input PN** is equal to 115 V, 120 V, or 127 V, the **Batt number** must be 20. When the **Nom input PN** is equal to 220 V, 230 V, or 240 V, the **Batt number** must be 32–40 depending on the battery configuration.

   a. **Batt number**: Set the number of battery blocks in one battery string.

   b. **Batt cap (AH)**: Set the battery capacity (battery block capacity (AH) x number of battery strings).[2]

   c. **Batt charge %**: Set the battery charge percentage (between 1% and 20%).

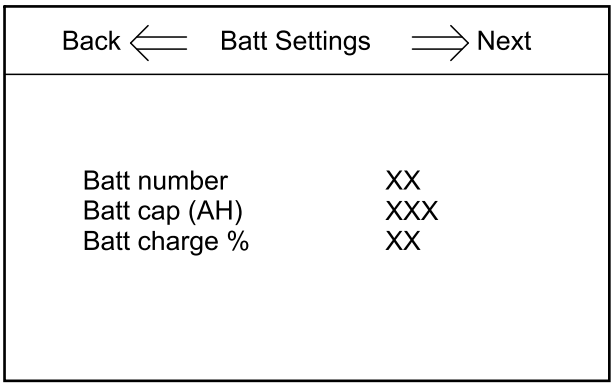

2. In a 1+1 redundant parallel system with a common battery bank, insert half of the battery capacity in each UPS.

Recommended Settings for 400 V UPSs with Internal Batteries and Modular Battery Cabinets

10 kVA UPS

Number of battery strings[3]	Settings with 7 Ah Batteries (E3SBT4) @ 0.1C			Settings with 9 Ah Batteries (E3SBTH4) @ 0.1C		
	Batt number	Batt cap (AH)	Batt charge %	Batt number	Batt cap (AH)	Batt charge %
1	40	7	4	40	9	5
2	80	14	8	80	18	10
3	120	21	12	120	27	15
4	160	28	16	160	36	20
5	200	35	20	200	45	20
6	240	42	20	240	54	20
7	280	49	20	280	63	20
8	320	56	20	320	72	20
9	360	63	20	360	81	20

15 kVA UPS

Number of battery strings[3]	Settings with 7 Ah Batteries (E3SBT4) @ 0.1C			Settings with 9 Ah Batteries (E3SBTH4) @ 0.1C		
	Batt number	Batt cap (AH)	Batt charge %	Batt number	Batt cap (AH)	Batt charge %
1	40	7	3	40	9	4
2	80	14	5	80	18	7
3	120	21	8	120	27	10
4	160	28	11	160	36	14
5	200	35	13	200	45	17
6	240	42	16	240	54	20
7	280	49	19	280	63	20
8	320	56	20	320	72	20
9	360	63	20	360	81	20
10	400	70	20	400	90	20
11	440	77	20	440	99	20
12	480	84	20	480	108	20
13	520	91	20	520	117	20
14	560	98	20	560	126	20
15	600	105	20	600	135	20

20 kVA UPS

Number of battery strings[3]	Settings with 7 Ah Batteries (E3SBT4) @ 0.1C			Settings with 9 Ah Batteries (E3SBTH4) @ 0.1C		
	Batt number	Batt cap (AH)	Batt charge %	Batt number	Batt cap (AH)	Batt charge %
1	40	7	2	40	9	3
2	80	14	4	80	18	5
3	120	21	6	120	27	8
4	160	28	8	160	36	10
5	200	35	10	200	45	13
6	240	42	12	240	54	15
7	280	49	14	280	63	18

3. Total number of battery strings in UPS and modular battery cabinet.

20 kVA UPS (Continued)

Number of battery strings[4]	Settings with 7 Ah Batteries (E3SBT4) @ 0.1C			Settings with 9 Ah Batteries (E3SBTH4) @ 0.1C		
	Batt number	Batt cap (AH)	Batt charge %	Batt number	Batt cap (AH)	Batt charge %
8	320	56	16	320	72	20
9	360	63	18	360	81	20
10	400	70	20	400	90	20
11	440	77	20	440	99	20
12	480	84	20	480	108	20
13	520	91	20	520	117	20
14	560	98	20	560	126	20
15	600	105	20	600	135	20

30 kVA UPS

Number of battery strings[4]	Settings with 7 Ah Batteries (E3SBT4) @ 0.1C			Settings with 9 Ah Batteries (E3SBTH4) @ 0.1C		
	Batt number	Batt cap (AH)	Batt charge %	Batt number	Batt cap (AH)	Batt charge %
1	40	7	2	40	9	2
2	80	14	3	80	18	4
3	120	21	4	120	27	5
4	160	28	6	160	36	7
5	200	35	7	200	45	9
6	240	42	8	240	54	10
7	280	49	10	280	63	12
8	320	56	11	320	72	14
9	360	63	12	360	81	16
10	400	70	13	400	90	17
11	440	77	15	440	99	19
12	480	84	16	480	108	20
13	520	91	17	520	117	20
14	560	98	19	560	126	20
15	600	105	20	600	135	20
16	640	112	20	640	144	20
17	680	119	20	680	153	20
18	720	126	20	720	162	20
19	760	133	20	760	171	20
20	800	140	20	800	180	20
21	840	147	20	840	189	20
22	880	154	20	880	198	20
23	920	161	20	920	207	20
24	960	168	20	960	216	20
25	1000	175	20	1000	225	20
26	1040	182	20	1040	234	20
27	1080	189	20	1080	243	20
28	1120	196	20	1120	252	20

4. Total number of battery strings in UPS and modular battery cabinet.

40 kVA UPS

Number of battery strings[5]	Settings with 7 Ah Batteries (E3SBT4) @ 0.1C			Settings with 9 Ah Batteries (E3SBTH4) @ 0.1C		
	Batt number	Batt cap (AH)	Batt charge %	Batt number	Batt cap (AH)	Batt charge %
1	40	7	1	40	9	2
2	80	14	2	80	18	3
3	120	21	3	120	27	4
4	160	28	4	160	36	5
5	200	35	5	200	45	7
6	240	42	6	240	54	8
7	280	49	7	280	63	9
8	320	56	8	320	72	11
9	360	63	9	360	81	12
10	400	70	10	400	90	13
11	440	77	11	440	99	14
12	480	84	12	480	108	16
13	520	91	13	520	117	17
14	560	98	14	560	126	18
15	600	105	15	600	135	19
16	640	112	16	640	144	20
17	680	119	17	680	153	20
18	720	126	18	720	162	20
19	760	133	19	760	171	20
20	800	140	20	800	180	20
21	840	147	20	840	189	20
22	880	154	20	880	198	20
23	920	161	20	920	207	20
24	960	168	20	960	216	20
25	1000	175	20	1000	225	20
26	1040	182	20	1040	234	20
27	1080	189	20	1080	243	20
28	1120	196	20	1120	252	20

Recommended Settings for 208 V UPSs with Internal Batteries and Modular Battery Cabinets

10 kVA UPS

Number of battery strings[5]	Settings with 7 Ah Batteries (E3SBT4) @ 0.1C			Settings with 9 Ah Batteries (E3SBTH4) @ 0.1C		
	Batt number	Batt cap (AH)	Batt charge %	Batt number	Batt cap (AH)	Batt charge %
1	20	7	2	20	9	3
2	40	14	4	40	18	5
3	600	21	6	600	27	8
4	80	28	8	80	36	10
5	100	35	10	100	45	13

5. Total number of battery strings in UPS and modular battery cabinet.

10 kVA UPS (Continued)

Number of battery strings[6]	Settings with 7 Ah Batteries (E3SBT4) @ 0.1C			Settings with 9 Ah Batteries (E3SBTH4) @ 0.1C		
	Batt number	Batt cap (AH)	Batt charge %	Batt number	Batt cap (AH)	Batt charge %
6	120	42	12	120	54	15
7	140	49	14	140	63	18
8	160	56	16	160	72	20
9	180	63	18	180	81	20
10	200	70	20	200	90	20
11	220	77	20	220	99	20
12	240	84	20	240	108	20
13	260	91	20	260	117	20
14	280	98	20	280	126	20
15	300	105	20	300	135	20

15 kVA UPS

Number of battery strings[6]	Settings with 7 Ah Batteries (E3SBT4) @ 0.1C			Settings with 9 Ah Batteries (E3SBTH4) @ 0.1C		
	Batt number	Batt cap (AH)	Batt charge %	Batt number	Batt cap (AH)	Batt charge %
1	20	7	2	20	9	2
2	40	14	3	40	18	4
3	600	21	4	600	27	5
4	80	28	6	80	36	7
5	100	35	7	100	45	9
6	120	42	8	120	54	10
7	140	49	10	140	63	12
8	160	56	11	160	72	14
9	180	63	12	180	81	16
10	200	70	13	200	90	17
11	220	77	15	220	99	19
12	240	84	16	240	108	20
13	260	91	17	260	117	20
14	280	98	19	280	126	20
15	300	105	20	300	135	20
16	320	112	20	320	144	20
17	340	119	20	340	153	20
18	360	126	20	360	162	20
19	380	133	20	380	171	20
20	400	140	20	400	180	20
21	420	147	20	420	189	20
22	440	154	20	440	198	20
23	460	161	20	460	207	20
24	480	168	20	480	216	20
25	500	175	20	500	225	20
26	520	182	20	520	234	20
27	540	189	20	540	243	20
28	560	196	20	560	252	20

6. Total number of battery strings in UPS and modular battery cabinet.

20 kVA UPS

Number of battery strings[7]	Settings with 7 Ah Batteries (E3SBT4) @ 0.1C			Settings with 9 Ah Batteries (E3SBTH4) @ 0.1C		
	Batt number	Batt cap (AH)	Batt charge %	Batt number	Batt cap (AH)	Batt charge %
1	20	7	1	20	9	2
2	40	14	2	40	18	3
3	600	21	3	600	27	4
4	80	28	4	80	36	5
5	100	35	5	100	45	7
6	120	42	6	120	54	8
7	140	49	7	140	63	9
8	160	56	8	160	72	11
9	180	63	9	180	81	12
10	200	70	10	200	90	13
11	220	77	11	220	99	14
12	240	84	12	240	108	16
13	260	91	13	260	117	17
14	280	98	14	280	126	18
15	300	105	15	300	135	19
16	320	112	16	320	144	20
17	340	119	17	340	153	20
18	360	126	18	360	162	20
19	380	133	19	380	171	20
20	400	140	20	400	180	20
21	420	147	20	420	189	20
22	440	154	20	440	198	20
23	460	161	20	460	207	20
24	480	168	20	480	216	20
25	500	175	20	500	225	20
26	520	182	20	520	234	20
27	540	189	20	540	243	20
28	560	196	20	560	252	20

Set the Life Cycle Monitoring

NOTICE

RISK OF EQUIPMENT DAMAGE

Only trained personnel following the required training course may undertake modifications to UPS system parameters.

Failure to follow these instructions can result in equipment damage.

1. On the display, select and then select **LCM Set**.

7. Total number of battery strings in UPS and modular battery cabinet.

2. You now have the following options:

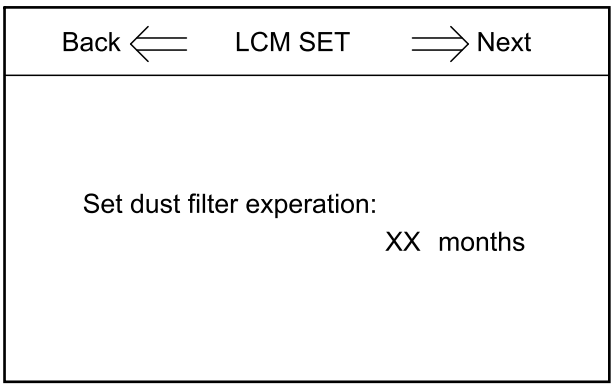

– Select **Set dust filter expiration** to set the service life of the dust filter.

Settings

Setting	Default Value	Available Settings
LCD contrast	60	0 to 100
Date and Time	05/07/2013 08:55:55	Year > 2000
Language	English	Chinese simplified, English, Italian, German, Russian, Spanish, Portuguese Brazilian, and French
Input voltage	400 V	200 V/208 V/220 V or 380 V/400 V/415 V
Bypass voltage	400 V for 3:3 UPSs 230 V for 3:1 UPSs	200 V/208 V/220 V or 380 V/400 V/415 V for 3:3 UPSs 220 V/230 V/240 V for 3:1 UPSs
Input frequency	50 Hz	60 Hz
Output voltage	400 V for 3:3 UPSs 230 V for 3:1 UPSs	200 V/208 V/220 V or 380 V/400 V/415 V for 3:3 UPSs 220 V/230 V/240 V for 3:1 UPSs
Output frequency	50 Hz	60 Hz
Output phase	3 for 3:3 UPSs 1 for 3:1 UPSs	3/1
Auto boost	disable	enable
Auto maint	disable	enable
System mode	single	parallel/ECO/parallel ECO/self aging
United number	1	1 to 4
System ID	0	0 to 3
Adjusted output voltage	400 V for 3:3 UPSs 230 V for 3:1 UPSs	Output voltage ±10 V
Frequency slew rate	2 Hz/s	0.1 to 5.0 Hz/s
Frequency synchronization window	3 Hz	0.5 to 5.0 Hz
Monochrome LCD time (min)	10	1/3/5/10/20/30
Bypass voltage upper limit (%)	15	10/20/25
Bypass voltage lower limit (%)	-20	-10/-15/-30/-40
Bypass frequency limited (Hz)	±5	±1/±3/±5
System restart mode after end of discharge	Normal	bypass only/ no output
Fan maintenance period	34560 hours (48 months)	0 to 60000 hours
DC capacitor maintenance period	34560 hours (48 months)	0 to 60000 hours
warranty period	9 months	1 to 36 months

Setting	Default Value	Available Settings
AC capacitor maintenance period	120 months	60 to 120 months
APS maintenance period	84 months	36 to 120 months
Dust filter maintenance period	3 months	0/3/4/5/12 months
Battery maintenance period	4 years	2 to 10 years
Battery number	32 for UPSs for external batteries 40 for UPSs with internal batteries	20/32/34/36/38/40
Battery AH	1	1 to 30000
Float charge voltage/cell (V)	2.25	2.10 to 2.35
Boost charge voltage/cell (V)	2.25	2.20 to 2.45
End of discharge voltage/cell, at 3 C current (V)	1.6	1.50 to 1.85
End of discharge voltage/cell, at 0.05 C current (V)	1.75	1.55 to 1.90
Charge current percent limit (%)	10	1 to 20
Battery temperature compensation	0	0 to 5 mV/°C
Boost charge time limit	12 hours	1 to 48 hours
Auto boost period	2160 hours (3 months)	720 to 30000 hours, available when auto boost is enabled
Auto maintenance discharge period	6480 hours (9 months)	720 to 30000 hours, available when auto maintenance is enabled
Critical battery temperature	45 °C	25 °C to 70 °C
Critical ambient temperature	40 °C	25 °C to 70 °C

Tests

Perform a Battery Maintenance Test

NOTICE
RISK OF EQUIPMENT DAMAGE Do not perform a battery maintenance test without load connected. **Failure to follow these instructions can result in equipment damage.**

Prerequisite:

- The bypass supply must be within specifications.
- The battery capacity must be above 25%.

The battery maintenance test is used to test the condition of the batteries.

During the battery maintenance test, the system transfers to battery mode and discharges the batteries until the battery low voltage alarm is reached.

1. On the display, select and then select **Maint test**.

   NOTE: If you wish to manually stop the battery test, select **Stop test**.

   If the battery maintenance test is passed, **Battery maintenance OK** will be recorded in the log. If the battery maintenance test is not passed, **Batt maint incomplete** will be recorded in the log.

Perform a Battery Test

The purpose of the battery test to verify the connection of the batteries and to check the battery capacity.

Prerequisite:

- The bypass supply must be within specifications.
- The battery capacity must be above 25%.
- The battery voltage must be above 95% of the float voltage.

During the battery test, the system transfers to battery mode for approximately 30 seconds and then returns to normal mode.

1. On the display, select and then select **Battery test**.

Maintenance

Parts Replacement

Determine if you need a Replacement Part

To determine if you need a replacement part, contact Schneider Electric and follow the procedure below so that the representative can assist you promptly:

1. In the event of an alarm condition, scroll through the alarm lists, record the information, and provide it to the representative.
2. Write down the serial number of the unit so that you will have it easily accessible when you contact Schneider Electric.
3. If possible, call Schneider Electric from a telephone that is within reach of the display so that you can gather and report additional information to the representative.
4. Be prepared to provide a detailed description of the problem. A representative will help you solve the problem over the telephone, if possible, or will assign a return material authorization (RMA) number to you. If a module is returned to Schneider Electric, this RMA number must be clearly printed on the outside of the package.
5. If the unit is within the warranty period and has been started up by Schneider Electric, repairs or replacements will be performed free of charge. If it is not within the warranty period, there will be a charge.
6. If the unit is covered by a Schneider Electric service contract, have the contract available to provide information to the representative.

Replace the Dust Filter

1. Lift the front panel free of the UPS cabinet.

   NOTE: Be careful not to disconnect the cable on the rear side of the front panel.

2. Loosen the screws and remove the metal brackets.

UPS for External Batteries

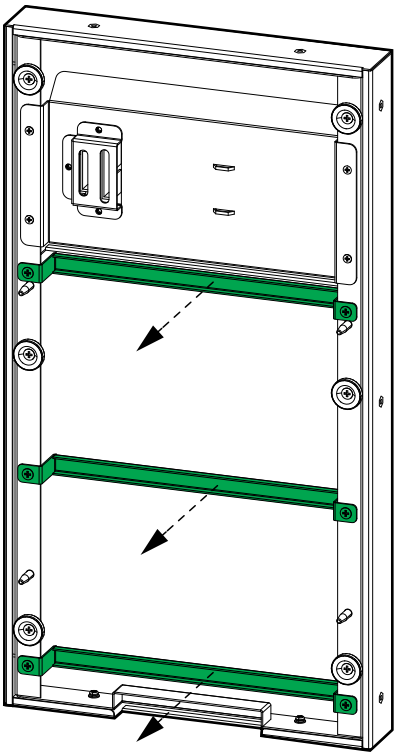

UPS with Internal Batteries

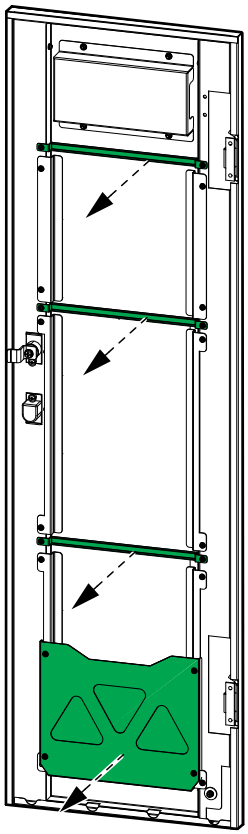

3. Replace the dust filter.

UPS for External Batteries

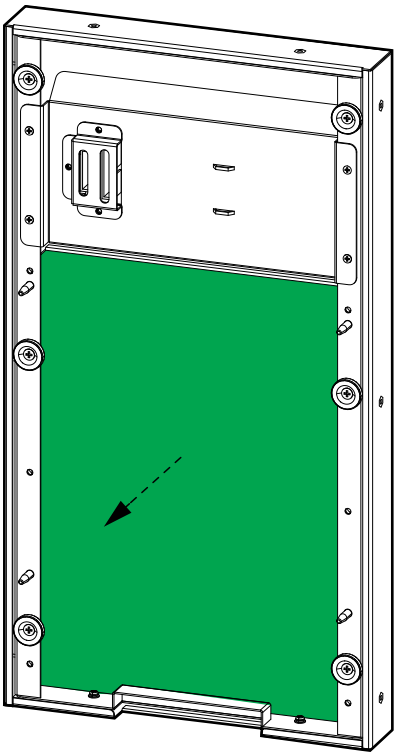

UPS with Internal Batteries

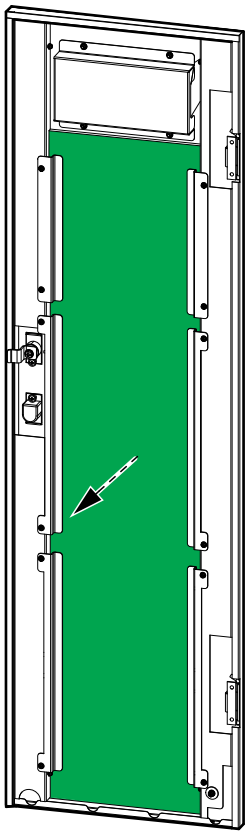

4. Reinstall the metal brackets and fasten with the screws.
5. Reinstall the front panel.
6. Reset the dust filter time in the display. See Set the Life Cycle Monitoring, page 44 for more information.

Troubleshooting

View the Active Alarms

1. On the display select .

   See Status and Alarm Messages, page 51 for a list of alarm messages and corrective actions.

2. Use and to go through the list of active alarms.

Buzzer

NOTE: The buzzer turns on as soon as an alarm condition is detected. The buzzer makes two short beeps and a long beep for general system alarms. The buzzer makes a continuous beep for critical alarms. It can be turned off by selecting on the home screen.

Status and Alarm Messages

This section lists status and alarm messages from the display. The display messages are listed in alphabetical order, and a suggested corrective action is listed with the display alarm message to help you troubleshoot problems.

Display text	Description	Corrective action
Battery boost charging	The batteries are charged with the configured boost charge voltage.	
Battery connected	The batteries are connected.	
Battery discharging	The load is drawing more power than the UPS can draw from the input, causing the UPS to draw power from the batteries.	Reduce the load. Please contact Schneider Electric.
Battery disconnected	The batteries are not connected.	Connect the batteries.
Battery expired	The battery service life has expired.	Replace the battery.
Battery end of discharge	The battery capacity is below the minimum acceptable value.	Recharge the batteries.
Battery float charging	The batteries are charged with the configured float charge voltage.	
Battery log reset	Reset the battery log.	
Batt maint incomplete	The battery maintenance test was not passed.	
Battery maintenance	Start the battery maintenance test.	
Battery maintenance OK	The battery maintenance test has been successfully completed.	
Battery temperature high	The battery temperature is too high.	Check the battery temperature.

Display text	Description	Corrective action
Battery test	Start the battery test.	
Battery test incomplete	The battery test was not passed.	
Battery test OK	The battery test has been successfully completed.	
Battery voltage low	Low voltage on battery.	Check the battery.
Battery wiring incorrect	The battery wiring is incorrect.	Check the battery wiring. Please contact Schneider Electric.
Battery/charger inoperable	The battery or charger is inoperable.	Check the battery. Check the charger. Please contact Schneider Electric.
Byp freq exceeds limits	The bypass frequency exceeds the limit.	Check the status of the bypass source. Please contact Schneider Electric.
Bypass fan inoperable	The UPS has one or more inoperable fans.	Check the fans.
Bypass fan time reset	Reset the service life timer for the fan.	
Bypass out of tolerance	The bypass voltage is out of tolerance.	Check the status of the bypass source. Please contact Schneider Electric.
Bypass overload	The load is drawing more power than the bypass source can supply.	Reduce the load. Please contact Schneider Electric.
Bypass overload timeout	The UPS can no longer sustain a **Bypass overload** situation.	Reduce the load. Please contact Schneider Electric.
Bypass sequence incorrect	The phase rotation on bypass is incorrect.	Check the status of the bypass source. Please contact Schneider Electric.
Bypass unavailable	The bypass source is not available.	Check the status of the bypass source. Please contact Schneider Electric.
Capacitor expired	Capacitor service life has expired.	Replace the capacitor.
Capacitor time reset	Capacitor service life timer has been reset.	
Clear log	Clear the log.	
DC bus overvoltage	Overvoltage on the DC bus.	
Dust filter expired	The dust filter service life has expired.	Replace the Dust Filter, page 48.
EPO	An EPO (emergency power off) device is activated.	Deactivate the EPO (emergency power off) device.
Fan expired	Fan service life has expired.	Replace the fan.
Fan inoperable	The UPS has one or more inoperable fans.	Check the fans. Please contact Schneider Electric.
Fan time reset	The fan service life timer has been reset.	
Firmware incompatible	The firmware is detected as incompatible with the rest of the system.	Perform a firmware update.
Generator input	Generator is supplying the UPS.	

Display text	Description	Corrective action
Inhibit transfer to inv.	Inhibit transfer to inverter operation.	
Inlet temperature high	Air inlet temperature is too high.	Check the status of the air inlet. Reduce the room temperature.
Inlet/outlet temp	Air inlet and outlet temperature.	
Input current unbalanced	Input current is unbalanced.	Check the status of the input source. Please contact Schneider Electric.
Input neutral unavailable	Input neutral is not available.	Check the status of the input neutral. Please contact Schneider Electric.
Input out of tolerance	The input voltage is out of tolerance.	Check the status of the input source. Please contact Schneider Electric.
Input overcurrent timeout	The UPS can no longer sustain an **Input overcurrent** situation.	Check the status of the input source. Please contact Schneider Electric.
Input SCR fan inoperable	Input SCR fan is inoperable.	Check the status of the input SCR fan. Please contact Schneider Electric.
Input SCR temp high	Input SCR temperature is too high.	Check the status of the input SCR fan. Please contact Schneider Electric.
Inverter high temp	Inverter temperature is too high.	Check the status of the inverter. Please contact Schneider Electric.
Inverter IGBT inoperable	The inverter IGBT is inoperable.	Check the status of the inverter IGBT. Please contact Schneider Electric.
Inverter inoperable	The inverter is inoperable.	Check the status of the inverter. Please contact Schneider Electric.
Inverter overload timeout	The UPS can no longer sustain an **Inverter overload** situation.	Check the status of the inverter. Please contact Schneider Electric.
Inverter shutdown	The inverter is shutting down.	
Inv DATA CAN incorrect	Inverter DATA CAN is incorrect.	
Inv firmware upgrade	The inverter firmware has been upgraded.	
Inv IO CAN incorrect	Inverter IO CAN is incorrect.	
Load on bypass	The UPS is in static bypass mode and the load is supplied by the bypass source.	
Load disconnected	The load has been disconnected or the unit output breaker UOB is open.	Check the load. Close the unit output breaker UOB.
Load on inverter	The UPS is in inverter operation mode and the load is supplied by the UPS.	
Low battery shutdown	The UPS is shutting down due to battery end of discharge	Recharge the batteries and restart the UPS. If auto-restart mode is configured, the UPS will start automatically restart when the mains return.
Man. transfer to inverter	Manual transfer to inverter operation.	

Display text	Description	Corrective action
Manual shutdown	Manual shutdown.	
MBB closed	The maintenance bypass breaker MBB is closed, supplying the load with unprotected power from the bypass source.	
MBB open	The maintenance bypass breaker is open.	
Module ID duplicate	The module ID has a duplicate. The module ID must be unique.	Check the ID of the modules.
No inlet temp sensor	No inlet temperature sensor present.	Check the status of the inlet temperature sensor.
No input temp sensor	No input temperature sensor present.	Check the status of the input temperature sensor.
No outlet temp sensor	No outlet temperature sensor present.	Check the status of the outlet temperature sensor.
Nom power out of tolerance	The nominal power does not match the UPS hardware.	Check the status of the input source. Please contact Schneider Electric.
Outlet temperature high	Air outlet temperature is too high.	Check the status of the air outlet. Please contact Schneider Electric.
Output short circuit	A short circuit is present on the output.	Check the status of the output. Please contact Schneider Electric.
Output overload	The load is drawing more power than the UPS system can supply.	Reduce the load. Contact Schneider Electric.
Parallel cabling incorrect	The parallel cabling is incorrect.	Check the status of the parallel cables. Please contact Schneider Electric.
Power sharing incorrect	The power sharing between the UPS units is incorrect.	Please check the load sharing on the UPS units. Redistribute the load between UPS units. Please contact Schneider Electric.
PWM sync unavailable	The PWM synchronization is unavailable.	Check the status of the PWM sync. Please contact Schneider Electric.
Rec firmware upgrade	The rectifier firmware has been upgraded.	
Rec soft start unavailable	The rectifier soft start is unavailable.	Check the status of the rectifier. Please contact Schneider Electric.
Rectifier high temp	The rectifier temperature is too high.	Check the status of the rectifier. Please contact Schneider Electric.
Rectifier inoperable	The rectifier is inoperable.	Check the status of the rectifier. Please contact Schneider Electric.
Relay disconnected	A relay is disconnected.	Check the status of the relays. Please contact Schneider Electric.
Relay short-circuit	A relay has short-circuited.	Check the status of the relays. Please contact Schneider Electric.
Room temp high	The room temperature is high.	Reduce the room temperature.
Save settings	Settings have been changed.	
Shutdown	UPS shutdown.	
Signal cable disconnect	Signal cable is disconnected.	Check the signal cable.

Display text	Description	Corrective action
Sync pulse unavailable	Sync pulse is unavailable. The UPS is not able to synchronize.	Check the sync pulse. Please contact Schneider Electric.
System overload	The load is drawing more power than the UPS system can supply.	Reduce the load. Contact Schneider Electric.
System setting incorrect	The system settings are incorrect.	Check the system settings. Contact Schneider Electric.
Technical check recommended	A technical check is recommended.	Contact Schneider Electric.
Transfer to bypass	Transfer the UPS to static bypass mode.	
Transfer to inverter	Transfer the UPS to inverter operation.	
Transfers exceed limits	There have been too many transfers between operation modes in a given time period.	Contact Schneider Electric.
Warranty expiring soon	Warranty is expiring soon.	Contact Schneider Electric.

Appendix: Switch/Breaker Details

3:1 UPS

	Model	Switch/Breaker	Description	Switch or Breaker
10 kVA	UIB	OSMC65H4C32	32A 4P	Breaker
	SIB	OSMC65H4C32	32A 4P	Breaker
	UOB	A9S68263	63A 2P	Switch
	MBB	A9S68163	63A 1P	Switch
	BB	A9S68332	32A 3P	Switch (for UPSs with internal batteries)
15 kVA	UIB	OSMC65H4C40	40A 4P	Breaker
	SIB	OSMC65H4C40	40A 4P	Breaker
	UOB	A9S68280	80A 2P	Switch
	MBB	A9S68180	80A 1P	Switch
	BB	A9S68363	63A 3P	Switch (for UPSs with internal batteries)
20 kVA	UIB	OSMC65H4C63	63A 4P	Breaker
	SIB	OSMC65H4C63	63A 4P	Breaker
	UOB	A9S68292	125A 2P	Switch
	MBB	A9S68192	125A 1P	Switch
	BB	A9S68363	63A 3P	Switch (for UPSs with internal batteries)
30 kVA	UIB	A9S68480	500VAC 80A 4P	Switch
	SIB	A9S68491	100A 4P	Switch
	UOB	A9S68491	100A 4P	Switch
	MBB	A9S68280	80A 2P	Switch
	BB	A9S68391	100A 3P	Switch (for UPSs with internal batteries)

3:3 UPS

	Model	Switch/Breaker	Description	Switch or Breaker
10 kVA	UIB	OSMC65H4C32	32A 4P	Breaker
	SIB	OSMC65H4C32	32A 4P	Breaker
	UOB	A9S68432	32A 4P	Switch
	MBB	OSMC65H3C32	32A 3P	Breaker
	BB	A9S68332	32A 3P	Switch (for UPSs with internal batteries)
15 kVA	UIB	OSMC65H4C40	40A 4P	Breaker
	SIB	OSMC65H4C40	40A 4P	Breaker
	UOB	A9S68440	40A 4P	Switch
	MBB	OSMC65H3C40	40A 3P	Breaker
	BB	A9S68363	63A 3P	Switch (for UPSs with internal batteries)
20 kVA	UIB	OSMC65H4C63	63A 4P	Breaker
	SIB	OSMC65H4C63	63A 4P	Breaker
	UOB	A9S68463	63A 4P	Switch
	MBB	OSMC65H3C50	50A 3P	Breaker
	BB	A9S68363	63A 3P	Switch (for UPSs with internal batteries)
30 kVA	UIB	A9S68480	500VAC 80A 4P	Switch

	SIB	A9S68480	500VAC 80A 4P	Switch
	UOB	A9S68480	500VAV 80A 4P	Switch
	MBB	A9S68363	500VAC 63A 3P	Switch
	BB	A9S68391	100A 3P	Switch (for UPSs with internal batteries)
40 kVA	UIB	A9S68492	125A 4P	Switch
	SIB	A9S68492	125A 4P	Switch
	UOB	A9S68492	125A 4P	Switch
	MBB	A9S68380	80A 3P	Switch
	BB	A9S68392	125A 3P	Switch (for UPSs with internal batteries)

Schneider Electric
35 rue Joseph Monier
92500 Rueil Malmaison
France

+ 33 (0) 1 41 29 70 00

As standards, specifications, and design change from time to time, please ask for confirmation of the information given in this publication.

© 2017 – 2023 Schneider Electric. All rights reserved.

990-91079G-001