Installation and Operation

Smart-UPS™
Uninterruptible Power Supply

Stack/Rack-Mount 6U
230 Vac

SURT 15000/20000 VA
XLI

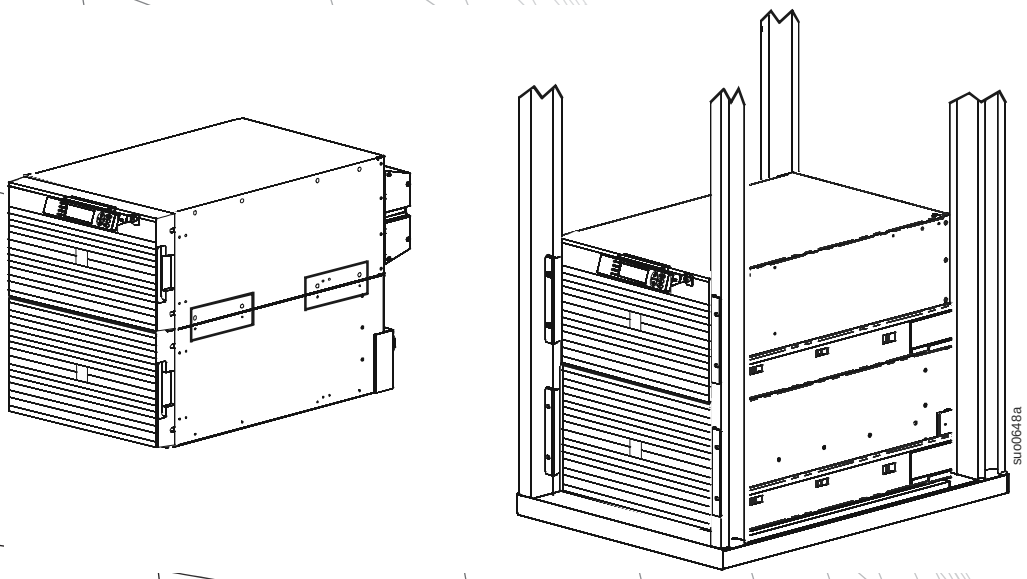

Important Safety Messages

Read the instructions carefully to become familiar with the equipment before trying to install, operate, service or maintain it. The following special messages may appear throughout this manual or on the equipment to warn of potential hazards or to call attention to information that clarifies or simplifies a procedure.

The addition of this symbol to a Danger or Warning product safety label indicates that an electrical hazard exists that will result in death, serious injury and product damage if the instructions are not followed.

The addition of this symbol to a Warning or Caution product safety label indicates that a hazard exists that can result in injury and product damage if the instructions are not followed.

Safety and General Information

Inspect the package contents upon receipt.
Notify the carrier and dealer if there is any damage.

- Adhere to all national and local electrical codes.
- All wiring must be performed by a qualified electrician.
- Changes and modifications to this unit not expressly approved by APC could void the warranty.
- This UPS is intended for indoor use only.
- Do not operate this unit in direct sunlight, in contact with fluids, or where there is excessive dust or humidity.
- Be sure the air vents on the UPS are not blocked. Allow adequate space for proper ventilation.
- For a UPS with a factory installed power cord, connect the UPS power cable directly to a wall outlet. Do not use surge protectors or extension cords.
- The equipment is heavy. Always practice safe lifting techniques adequate for the weight of the equipment.
- The batteries are heavy. Remove the batteries before installing the UPS and external battery packs (XLBPs), in a rack.
- Always install XLBPs at the bottom in rack-mount configurations. The UPS must be installed above the XLBPs.
- Always install peripheral equipment above the UPS in rack-mount configurations.

Battery safety

- The battery typically lasts for two to five years. Environmental factors impact battery life. Elevated ambient temperatures, poor quality utility power, and frequent short duration discharges will shorten battery life. The battery should be replaced before end of life.
- APC by Schneider Electric uses sealed lead acid batteries. Under normal use and handling, there is no contact with the internal components of the battery. Over charging, over heating or other misuse of batteries can result in a discharge of battery electrolyte. Released electrolyte is harmful to the skin and eyes, and may be toxic.
- Replace the battery immediately when the UPS indicates battery replacement is necessary.
- Before installing or replacing the batteries, remove jewelry such as wristwatches and rings. High short circuit current through conductive materials could cause severe burns.
- The UPS will recognize as many as 10 external battery packs connected to the UPS. **Note: For each XLBP that is added, increased recharge time will be required.**
- Do not dispose of batteries by burning them. The batteries may explode.

Deenergizing safety

The UPS contains internal batteries and may present a shock hazard even when disconnected from the branch circuit (mains). Before installing or servicing the equipment check that the:

- input circuit breaker is in the **OFF** position.
- internal UPS the batteries are removed.
- XLBP battery modules are disconnected.

Electrical safety

- For models with a hardwired input, the connection to the branch circuit (mains) must be performed by a qualified electrician.
- 230 V models only: In order to maintain compliance with the EMC directive for products sold in Europe, output cords attached to the UPS must not exceed 10 meters in length.
- The protective earth conductor for the UPS carries the leakage current from the load devices (computer equipment). An insulated ground conductor must be installed as part of the branch circuit that supplies the UPS. The conductor must have the same size and insulation material as the grounded and ungrounded branch circuit supply conductors. The conductor will be green, with or without a yellow stripe.
- The ground conductor must be grounded to earth at the service equipment, or if supplied by a separately derived system, at the supply transformer or motor generator set.
- Leakage current for a pluggable, Type A UPS may exceed 3.5 mA when a separate ground terminal is used.
- The UPS input ground conductor must be properly bonded to protective earth at the service panel.
- If the UPS input power is supplied by a separately derived system, the ground conductor must be properly bonded at the supply transformer or motor generator set.

Hardwire safety

- Check that all branch circuit (mains) and low voltage (control) circuits are deenergized, and locked out before installing cables or making connections, whether in the junction box or to the UPS.
- Wiring by a qualified electrician is required.
- Check national and local codes before wiring.
- Strain relief is required for all hardwiring (supplied with select products). Snap in type strain reliefs are recommended.
- All openings that allow access to UPS hardwire terminals must be covered. Failure to do so may result in personal injury or equipment damage.
- Select wire size and connectors according to national and local codes.

General information

- The model and serial numbers are located on a small, rear panel label. For some models, an additional label is located on the chassis under the front bezel.
- Always recycle used batteries.
- Recycle the package materials or save them for reuse.

Product Description

The APC™ by Schneider Electric Smart-UPS™ SURT is a high performance uninterruptible power supply (UPS). The UPS helps provide protection for electronic equipment from utility power blackouts, brownouts, sags, and surges, small utility power fluctuations and large disturbances. The UPS also provides battery backup power for connected equipment until utility power returns to safe levels or the batteries are fully discharged.

This user manual is available on the enclosed Documentation CD and on the APC by Schneider Electric web site, www.apc.com.

Specifications

Environmental

Temperature	**Operating**	0° to 40° C (32° to 104° F)
	Storage	-15° to 30° C (5° to 86° F) charge UPS battery every six months 30° to 70° C (86° to 158° F) charge UPS battery every three months
Maximum Elevation	**Operating**	3,000 m (10,000 ft)
	Storage	15,000 m (50,000 ft)
Humidity		0 to 95% relative humidity, non-condensing

Physical

Weight		
Combined shipping weight UPS and one XL battery pack		314.09 kg (691 lb)
Combined weight (no packing material) UPS and one XL battery pack		247.73 kg (545 lb)
UPS with no packing material	66 kg (145 lb)	
XL Battery Pack with no packing material with eight battery modules	181 kg (400 lb)	

Dimensions	**UPS**	**XLBP**

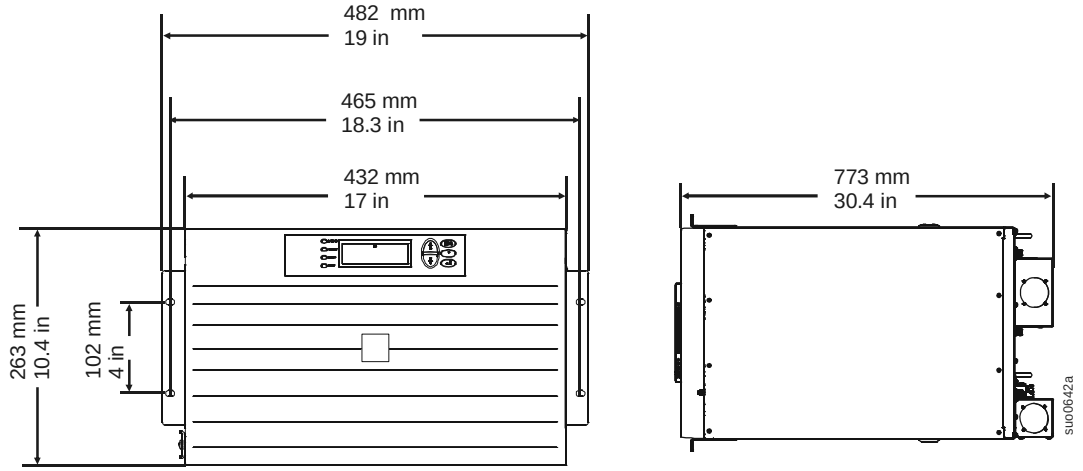

Accessories

Install accessories before connecting power to the UPS.

- Refer to the APC by Schneider Electric web site, **www.apc.com** for available accessories.
- User documentation for the Network Management Card installed on this UPS is available on the utility CD included with this unit.

Optional accessories

- Maintenance bypass
- External battery pack model SURT192RMXLBP2
- Equipment cart

Package Contents

Check the package contents:

• UPS • Input wiring tray • Output wiring tray • PowerView module • Front bezel • UPS serial cable • Network Management Card (NMC) serial cable • Ethernet jumper cable for rear panel network access 25 cm (10 in)	• Literature kit containing: – Product documentation – Documentation CD – Network Management Card Utility CD – Network Management Card documentation – Safety Guide – Warranty registration card	• ***Rack-mount models also include:*** – Rail Kit – Four ornamental screws – Two cage nuts – Two rail cleats – Four pan head screws – Two rack-mount brackets – Eight flat head screws

Hardware

8		Flat head screws for securing rack-mount or tie brackets to the UPS and XLBP
2	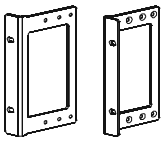	Rack-mount brackets or tie brackets
4		Rack-mount units: pan head screws for securing rail cleats to the UPS
2	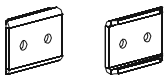	rail cleats
2		Rack-mount units: cage nuts for rack-mount installation
4		Rack-mount units: ornamental screws for securing the UPS to the rack

Front Panel Features

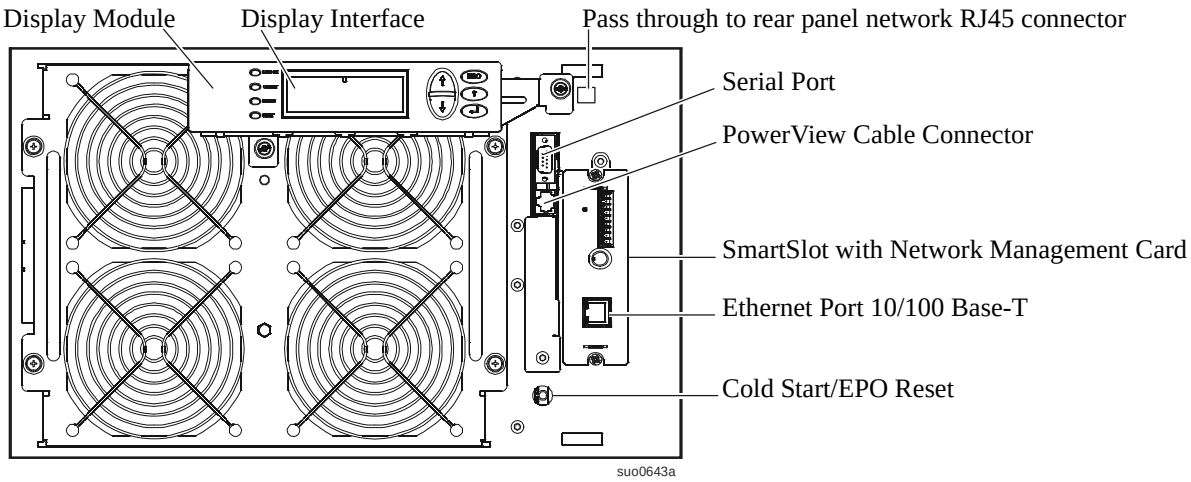

Installation

⚠ CAUTION

DAMAGE TO EQUIPMENT OR PERSONNEL

- The equipment is heavy. Always practice safe lifting techniques adequate for the weight of the equipment.
- The batteries are heavy. Remove the batteries from the UPS and XLBPs before installing them in a rack.
- When installing equipment in a rack-mount or stack configuration, always install external battery packs at the bottom of the rack with the UPS above the XLBPs.
- When installing equipment in a rack-mount or stack configuration, always install the UPS at the bottom of the rack with the peripheral equipment above the UPS.

Failure to follow these instructions can result in equipment damage and minor or moderate injury

Install PowerView Module

Before attaching the PowerView module to the UPS:

1. Loosen the two bracket screws on the back of the PowerView module.
   a. Slide the bracket to the position that will accommodate the screw holes on the UPS.
   b. Tighten the screws on the bracket.
2. Secure the PowerView module to the UPS using the two thumb screws attached to the module.

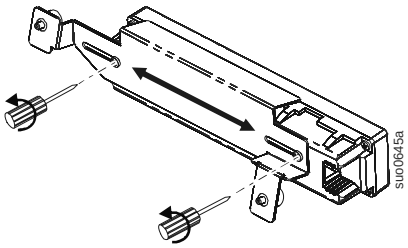

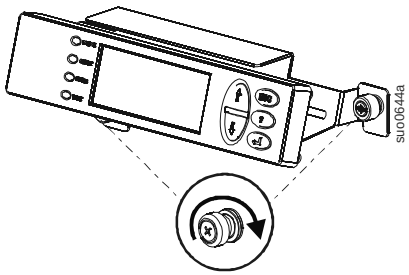

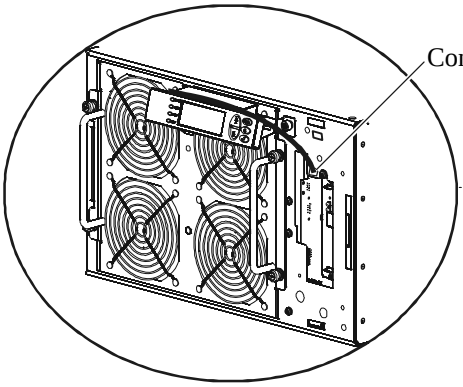

Connect the PowerView cable to the PowerView connector on the UPS.

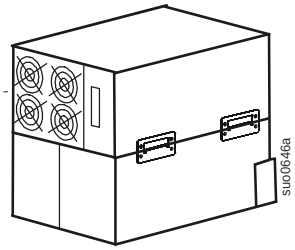

Stack Configuration

Total stack configuration height is recommended NOT to exceed 18U. This is the equivalent of two XLBPs and one UPS.

Four screws must be used to secure each tie bracket to the units, (see diagram).

For detailed instructions on installing batteries and the battery compartment doors, “Rack-Mount Configuration” on this page.

Refer to the “Rack-Mount Configuration” on this page, for cable routing and bezel installation details.

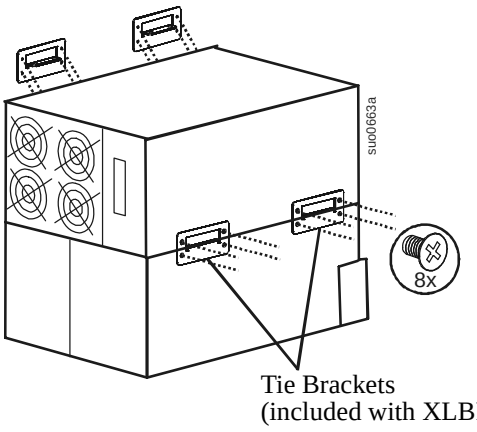

Rack-Mount Configuration

Install rack-mount brackets

Four flat head screws must be used to secure each rack-mount bracket to the unit.

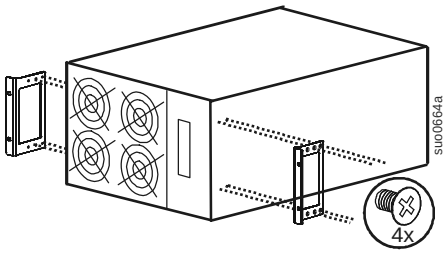

Install rail cleats

Two pan head screws must be used to secure each rail cleat to the unit.

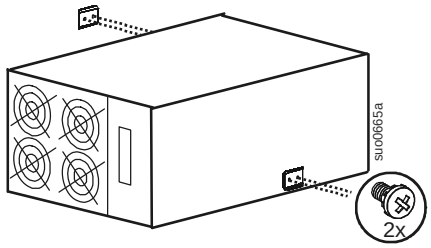

Install rails in rack

For details on rail installation refer to the instructions included with the rail kit.

Install units in rack

Install units in rack

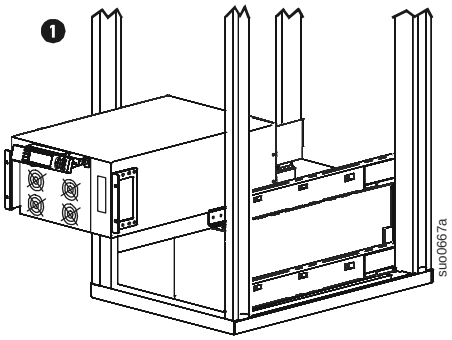

Secure the UPS and the XLBP(s) in the rack using the cage nuts and ornamental screws included in the package.

Four ornamental screws and two cage nuts must be used to secure each unit.

A cage nut must be used in the top hole of each rack-mount bracket when securing the unit in the rack.

The bottom hole of each rack-mount bracket must be secured using an ornamental screw in the threaded hole.

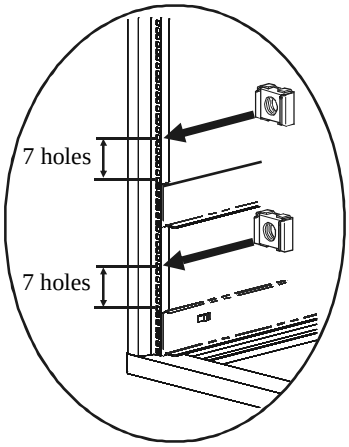

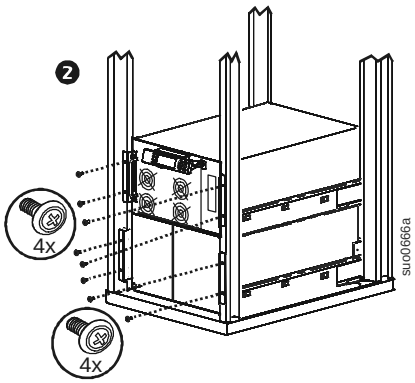

Install and connect all battery modules

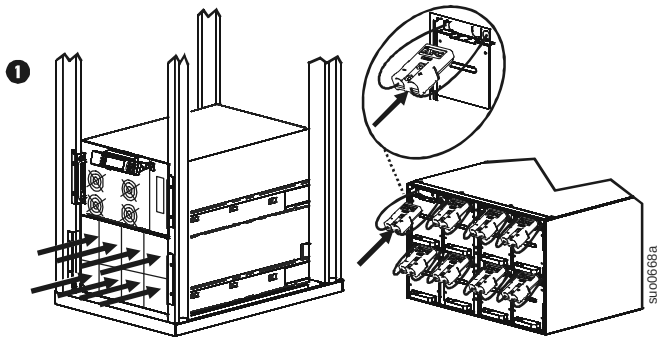

CAUTION

RISK OF EQUIPMENT DAMAGE

Connect all eight battery modules.

Failure to follow these instructions can result in equipment damage

Replace the battery compartment doors.

Tighten the screws to secure the battery doors.

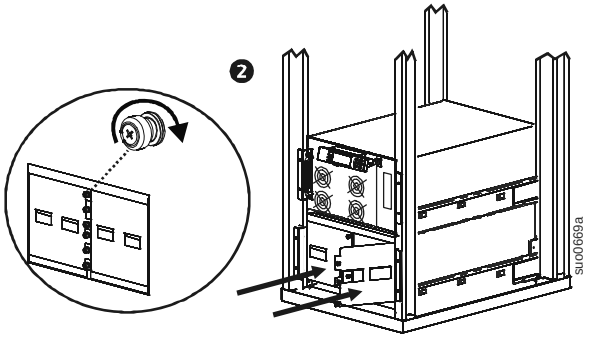

Network Cable Connections

Route the network cable through the internal pass through slot

Locate the RJ45 connector and the ethernet port on the front panel of the UPS. Connect the ethernet jumper cable (included), to the RJ45 connector and the ethernet port.

Connect a network cable (not included), to the RJ45 connector on the rear panel of the UPS.

There is an internal ethernet cable that connects the front and rear panel RJ45 connectors.

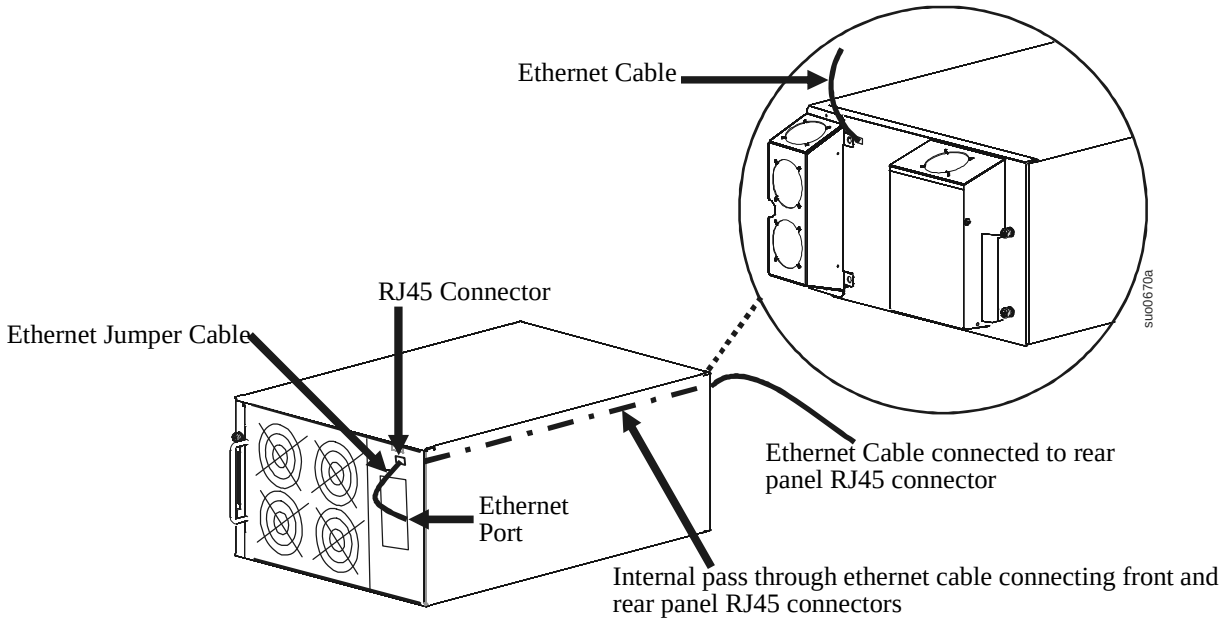

Route the network cable through a notch in the bezel

Cables that are connected to the UPS for front panel access must be routed through one of the notches on the bezel.

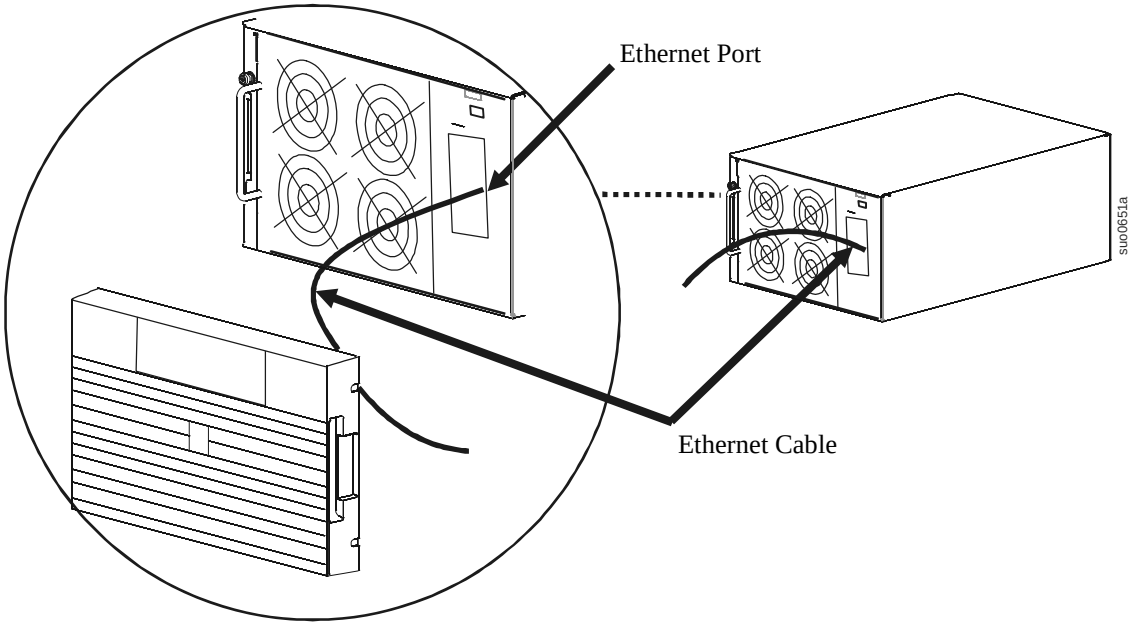

Install Bezels

Install a bezel on the UPS and XLBP(s).

Refer to the external battery pack user manual for installation instructions.

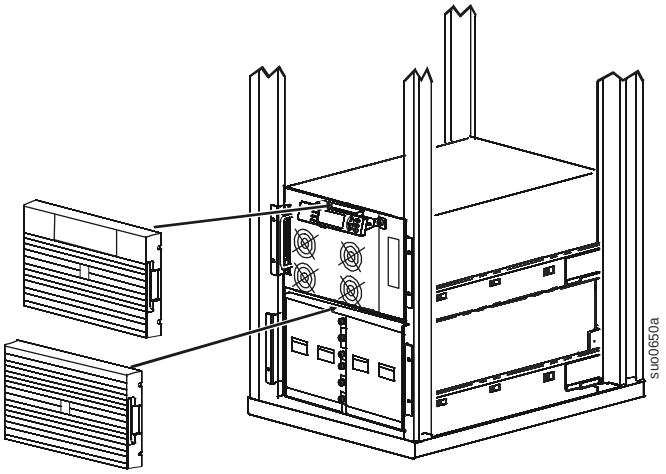

Hardwire the UPS

⚠ CAUTION

DAMAGE TO EQUIPMENT OR PERSONNEL

- Disconnect the mains input circuit breaker before installing or servicing the UPS or connected equipment.
- Disconnect internal and external batteries before installing or servicing the UPS or connected equipment.
- The UPS contains internal and external batteries that may present a shock hazard even when disconnected from the mains.
- UPS AC hardwired and pluggable outlets may be energized by remote or automatic control at any time.
- Disconnect equipment from the UPS before servicing any equipment.
- Do not use the UPS as a safety disconnect.
- Install appropriate strain reliefs (not supplied).

Failure to follow these instructions can result in equipment damage and minor or moderate injury

1. For input wiring only, install a utility circuit breaker in accordance with local electrical codes.
2. Switch the utility circuit breaker OFF.
3. Remove the appropriate circular knockouts from the input and output wiring trays.
4. Remove the screws that secure the covers and take the covers off of the trays.
5. Remove the five screws that secure the strain relief bar.
6. Remove the appropriate jumpers for input power source compatibility and output wiring options. Refer to “Wiring Specifications” on page 12 in this manual.
7. Insert the cables through the knockout holes to the terminal blocks. Connect the ground terminal before connecting any other terminal. Refer to “Wiring Specifications” on page 12 in the this manual.
8. Use an appropriate strain relief (not supplied), on the hardwired input and output power cables.
9. Replace the wiring tray covers. Failure to do so can result in personal injury or equipment damage.

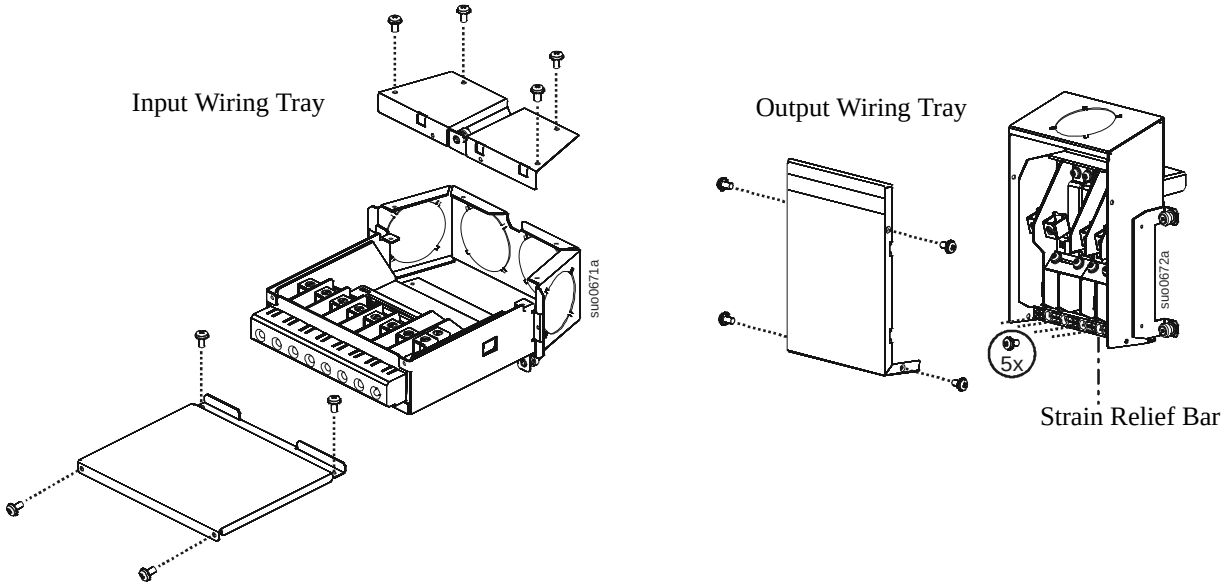

Install Input/Output Wiring Trays in UPS Rear Panel

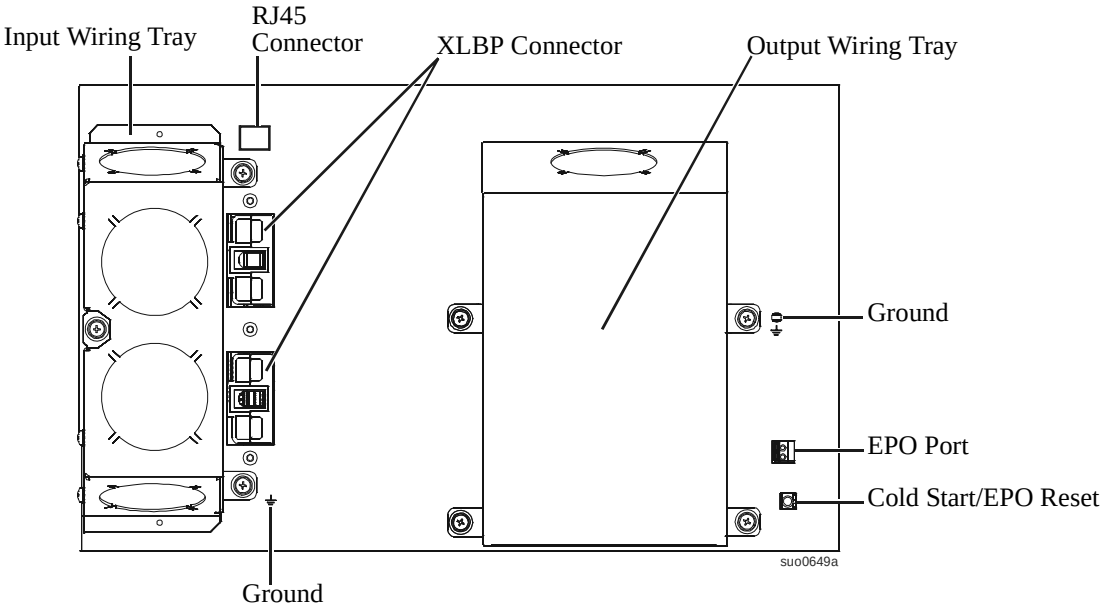

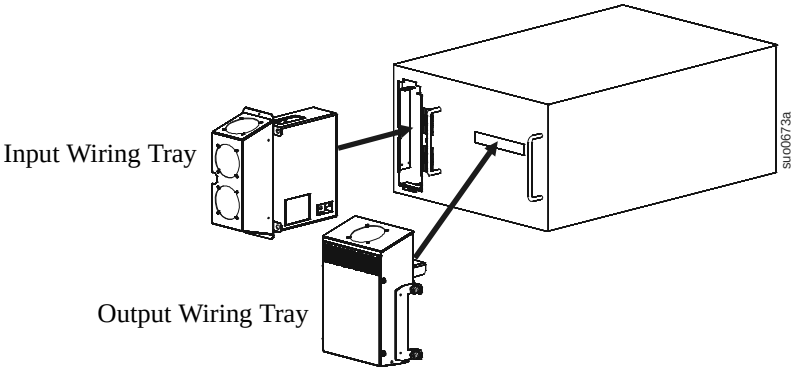

Wiring Specifications

⚠ CAUTION

DAMAGE TO EQUIPMENT OR PERSONNEL

- Adhere to all national and local electrical codes.
- Wiring should be performed by a qualified electrician.
- The UPS must be wired into a branch circuit, equipped with a circuit breaker rated as specified in the tables below.
- Actual wire size must comply with required amp capacity and national and local electrical codes.
- Recommended input terminal screw torque: 4.5 Nm (40 lb-in) minimum

Failure to follow these instructions can result in equipment damage and minor or moderate injury

Input Connections	Output Connections
Main Input Single-Phase: Wire to L1, N, and ⏚ Three-Phase: Wire to L1, L2, L3, N, and ⏚	**Hardwire** Single-Phase: Wire to L1, N, and ⏚ Three-Phase: Wire to L1, L2, L3, N, and ⏚
Bypass Input (optional) Single-Phase: Wire to B1, N, and ⏚ Three-Phase: Wire to B1, B2, B3, N, and ⏚	**Single-phase PDU** XL battery pack PDU to UPS: Wire L1, N, ⏚

Single Feed

Wiring	Number of Phases	Voltage	Current Full Load (maximum)	External Input Circuit Breaker (typical)	Wire Size (typical)
SURT15K XLI/XLICH/XLI-CC					
Input Output	1 1	220/230/240 Vac 220/230/240 Vac	83 A 66 A	100 A each phase not required	35 mm^2 25 mm^2
Input Output	3 1	380/400/415 Vac 220/230/240 Vac	28 A each phase 66 A	100 A each phase not required	35 mm^2 25 mm^2
Input Output	3 3	380/400/415 Vac 380/400/415 Vac	28 A each phase 22 A each phase	35 A or 40 A each phase not required	16 mm^2 16 mm^2
SURT20K XLI/XLICH/XLI-CC					
Input Output	1 1	220/230/240 Vac 220/230/240 Vac	105 A 87 A	125 A each phase not required	50 mm^2 35 mm^2
Input Output	3 1	380/400/415 Vac 220/230/240 Vac	35 A each phase 87 A	125 A each phase not required	50 mm^2 35 mm^2
Input Output	3 3	380/400/415 Vac 380/400/415 Vac	35 A each phase 29 A each phase	50 A each phase not required	16 mm^2 16 mm^2

NOTE: Units configured for three phase input and single phase output operation, the entire load connected to the UPS will transfer to L1 and Neutral of the three phase input when the UPS is operating in Bypass mode.

*The current is specified at nominal input voltage.

The output frequency is user selectable. Refer to the PowerView display menu screens for available options.

Dual Feed							
Wiring	**Number of Phases**	**Voltage**	**Current Full Load (maximum)**	**External Input Circuit Breaker Mains (typical)**	**External Input Circuit Breaker Bypass (typical)**	**Wire Size Mains (typical)**	**Wire Size Bypass (typical)**
SURT15K XLI/XLICH/XLI-CC							
Input Output	1 1	220/230/240 Vac 220/230/240 Vac	83 A 66 A	100 A each phase not required	100 A each phase not required	35 mm^2 25 mm^2	35 mm^2 25 mm^2
Input Output	3 1	380/400/415 Vac 220/230/240 Vac	28 A each phase 66 A	35 A or 40 A each phase not required	100 A each phase not required	6 mm^2 25 mm^2	35 mm^2 25 mm^2
Input Output	3 3	380/400/415 Vac 380/400/415 Vac	28 A each phase 22 A each phase	35 A or 40 A each phase not required	35 A or 40 A each phase not required	6 mm^2 6 mm^2	16 mm^2 16 mm^2
SURT20K XLI/XLICH/XLI-CC							
Input Output	1 1	220/230/240 Vac 220/230/240 Vac	105 A 87 A	125 A each phase not required	125 A each phase not required	50 mm^2 35 mm^2	50 mm^2 35 mm^2
Input Output	3 1	380/400/415 Vac 220/230/240 Vac	35 A each phase 87 A	50 A each phase not required	125 A each phase not required	10 mm^2 35 mm^2	50 mm^2 35 mm^2
Input Output	3 3	380/400/415 Vac 380/400/415 Vac	35 A each phase 29 A each phase	50 A each phase not required	50 A each phase not required	10 mm^2 10 mm^2	16 mm^2 16 mm^2

NOTE: Units configured for three phase input and single phase output operation, the entire load connected to the UPS will transfer to L1 and Neutral of the three phase input when the UPS is operating in Bypass mode.

*The current is specified at nominal input voltage.

The output frequency is user selectable. Refer to the PowerView display menu screens for available options.

Input Wiring Options

Input wiring overview: Refer to the diagrams on the following pages for input wiring options.

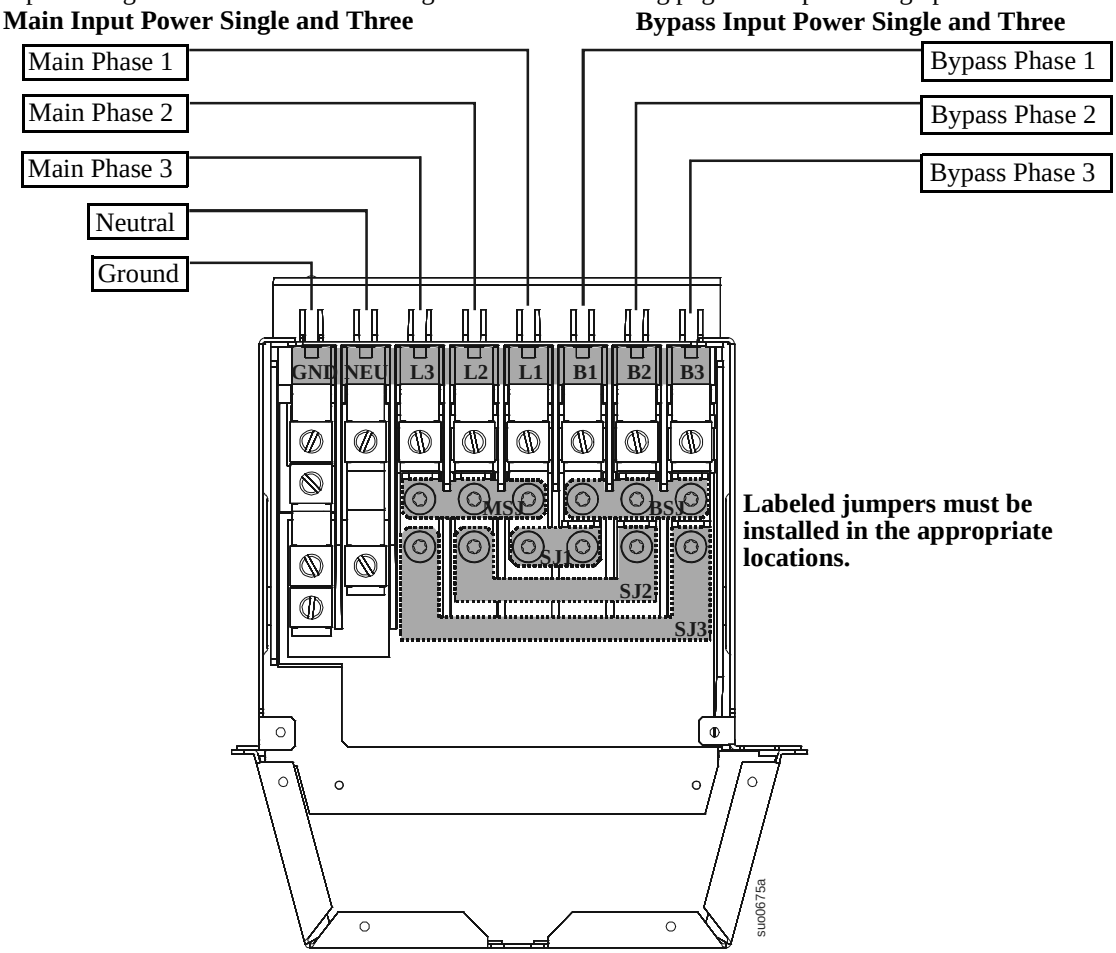

Input/Output Jumper Configurations		Input Jumpers					Output Jumpers
Power I/O Configuration Input: Output	**Separate Bypass Feed**	**SJ1**	**SJ2**	**SJ3**	**MSJ**	**BSJ**	**OSJ**
1:1**	No	✓	✓	* ✓	* ✓	✓	✓
1:1	Yes				✓	✓	✓
3:1	No	✓				✓	✓
3:1	Yes					✓	✓
3:3	No	✓	✓	✓			
3:3	Yes						

* Optional
** Factory Default

Be sure ground wire conductor and insulator are securely fastened. To connect the ground wire:

1. Strip the cable of insulation, exposing the wire. Secure the exposed wire with lug “A”.
2. Secure the insulated portion of the cable with lug “B”.

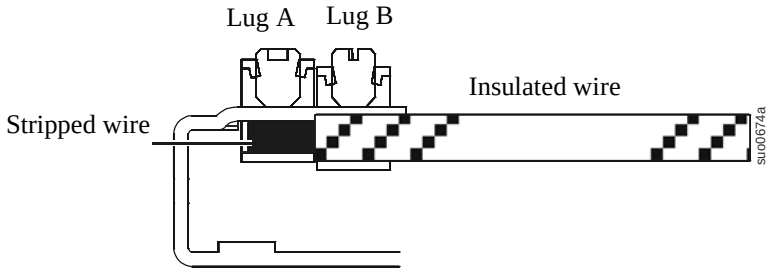

Input wiring option 1 Factory Default
Single phase input, single phase output, single feed

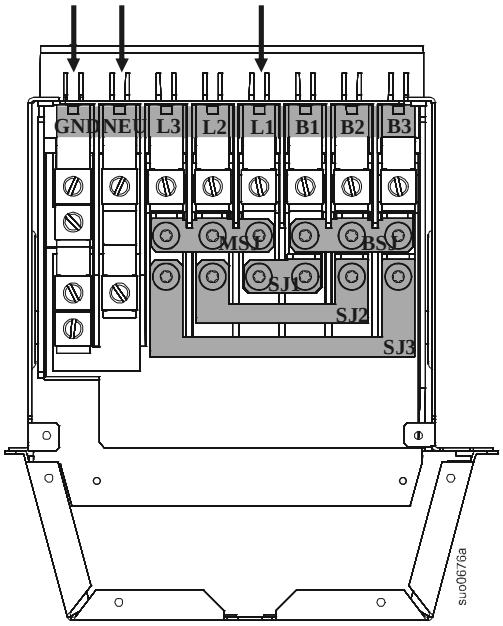

Input wiring option 2
Single phase input, single phase output, dual feed

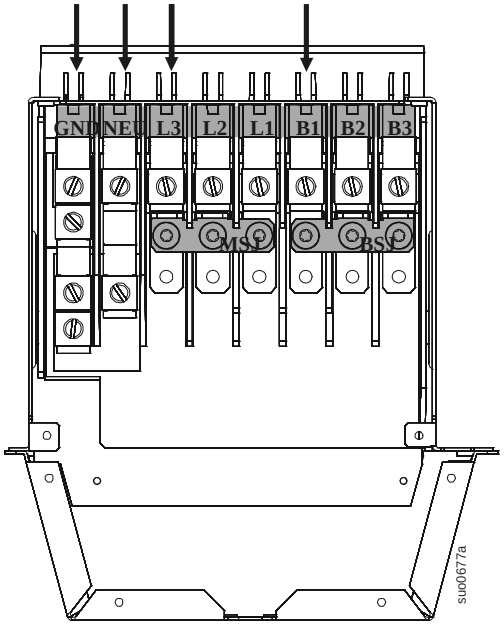

Input wiring option 3

Three phase input, single phase output, single feed

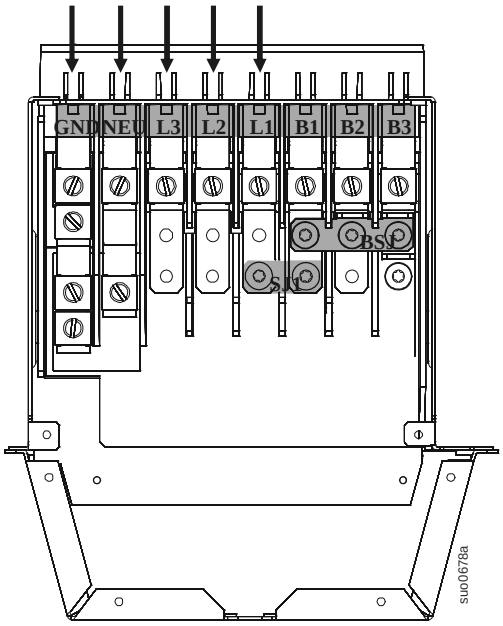

Input wiring option 4

Three phase input, single phase output, dual feed

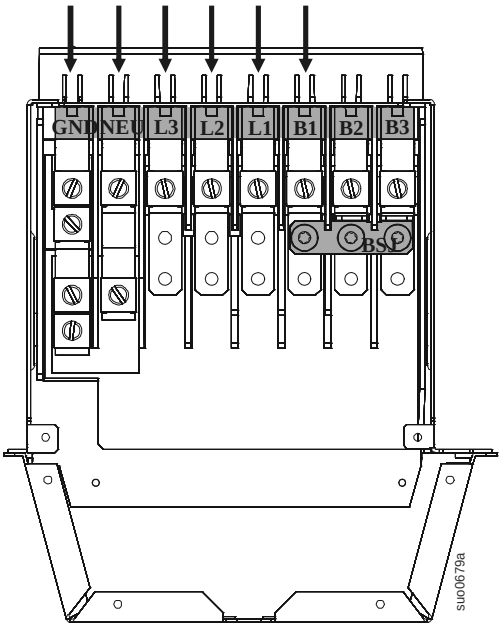

Input wiring option 5

Three phase input, three phase output, single feed

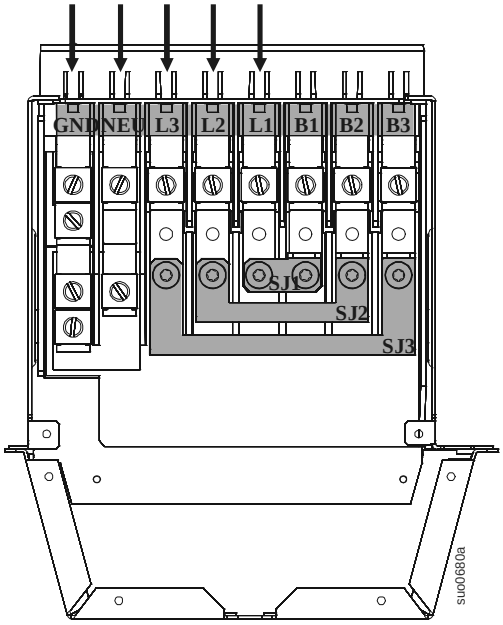

Input wiring option 6

Three phase input, three phase output, dual feed

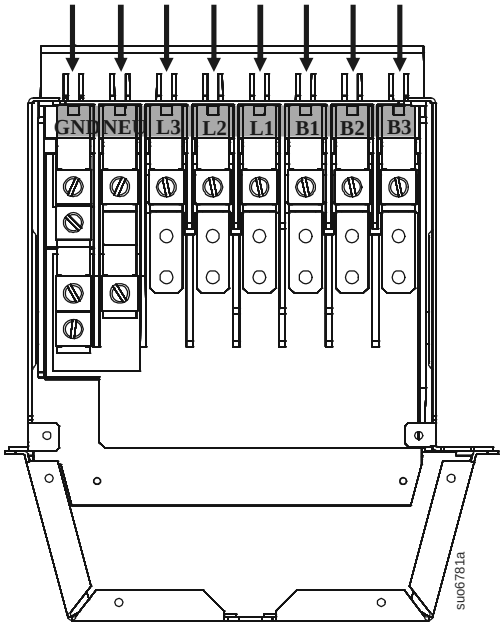

Output Wiring Options

Output wiring overview. Refer to the diagrams on the following pages for output wiring options.

Labeled jumpers and connectors must be installed in the appropriate locations.

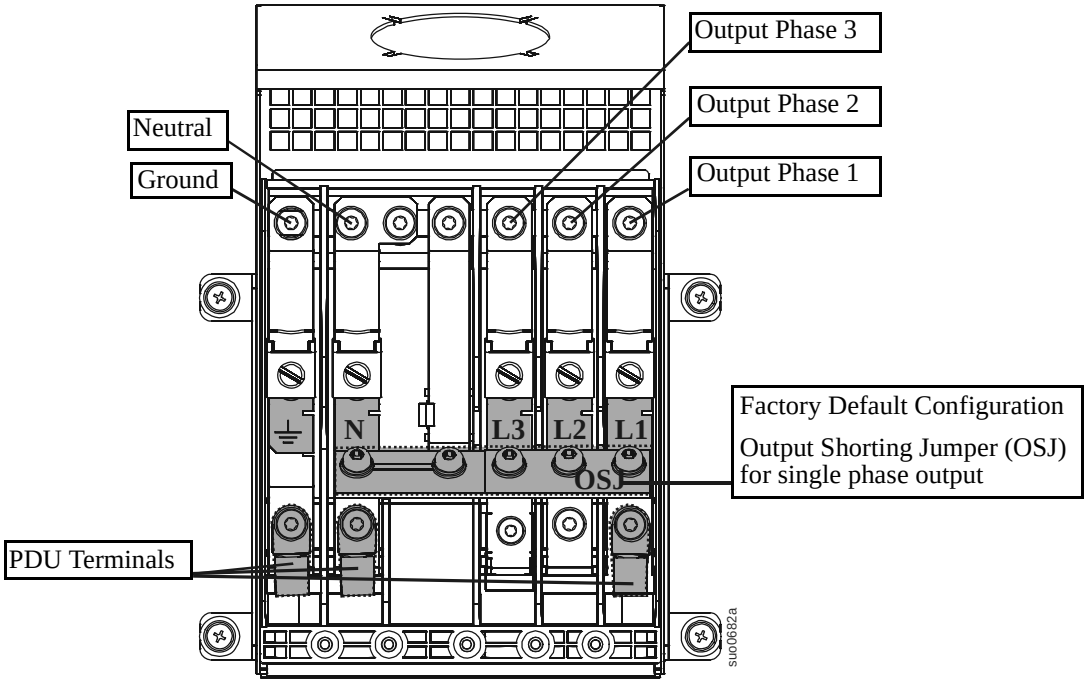

Output hardwire option 1

Single phase hardwire output connection

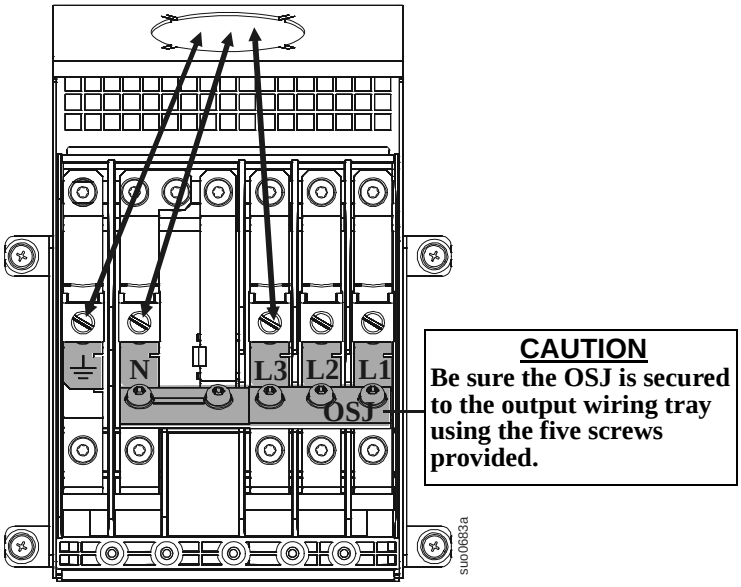

Output hardwire option 2

Three phase hardwire output connection
XLBP PDU not connected
Output shorting jumper (OSJ) removed

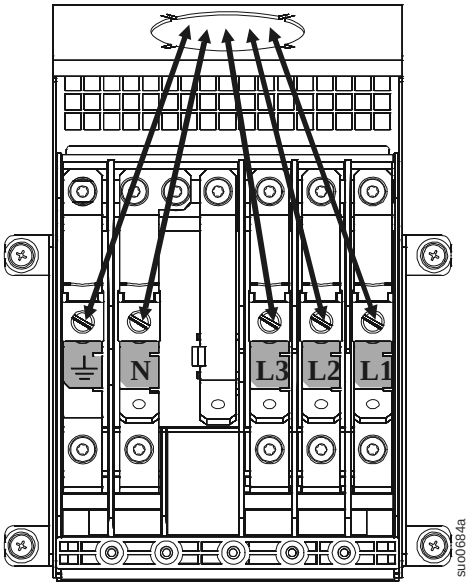

Output PDU option

Single phase output connection to battery pack PDU

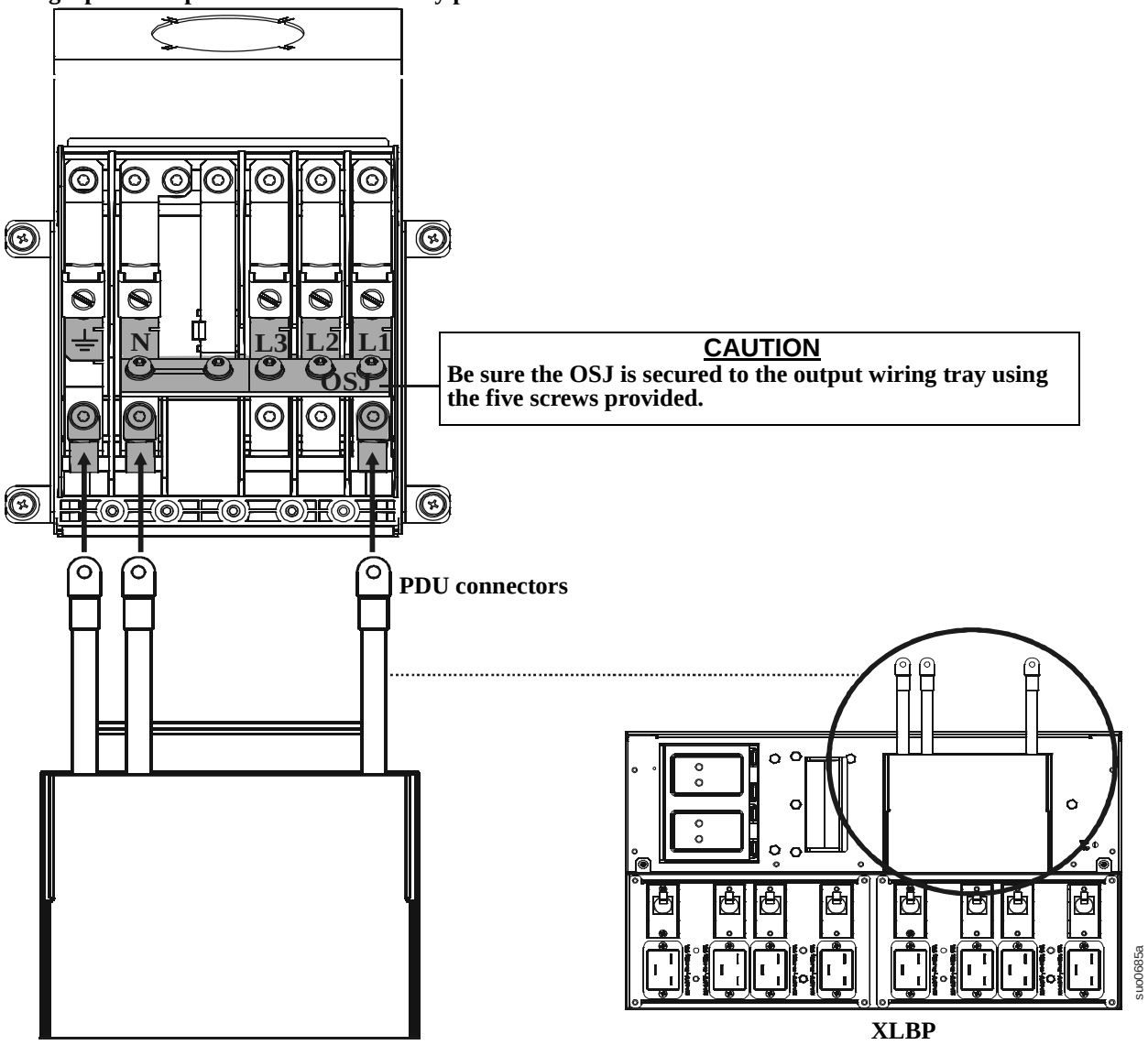

Operation

The UPS has three operation mode options.

Normal operation

During normal operation, the UPS double converts utility power to conditioned power for the connected load.

Battery operation

During battery operation, the UPS provides power to the connected load from batteries for a finite period of time. The UPS transfers to battery operation if the supply of utility power fails or is outside predefined limits.

Bypass operation

Bypass mode is reached either as a user selection or automatically.

- Bypass mode can be selected through the **Control** menu screen on the PowerView display.
- The UPS will automatically switch into bypass mode if:
  - Both normal and battery operation modes are unavailable
  - An output overload condition occurs
  - The UPS has an internal fault

During bypass operation the utility power is connected to the load, bypassing the internal converters. If bypass mode becomes unavailable the UPS will automatically switch to mains power. In the event that mains power is unavailable the system will switch to battery power.

Battery LED

The battery LED is located on the front bezel of the XLBP. During normal operation the LED is not illuminated.

On start up the XLBP LED may illuminate and blink within the first minute. The LED should then extinguish.

Refer to the XLBP User Manual for details on XLBP operation.

PowerView Interface Display

The four LEDs to the left of the LCD display indicate the operational status of the UPS.

The five navigation keys to the right of the LCD display are used to select and open menu items, to access information, change system parameters, and to access context sensitive help.

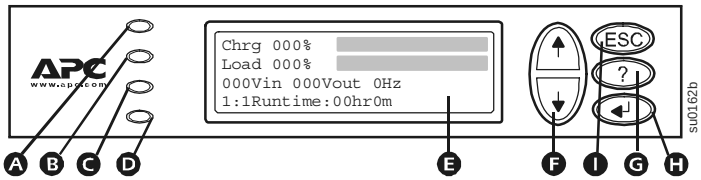

A	LOAD ON	When LED illuminates green, the UPS supplies power to the load
B	ON BATT	When LED illuminates yellow, power to load flows from the batteries to the power module
C	BYPASS	When LED illuminates yellow, power to the load is supplied through bypass
D	FAULT	When LED illuminates red, a fault condition exists
E	LCD interface	Displays menu screens for alarms, status data, instructional help, and configuration items
F	UP/DOWN buttons	Used to scroll through and select menu items
G	HELP key	Opens context sensitive help
H	ENTER key	Opens menu items and saves changes to system parameters
I	ESC key	Returns to previous screen displayed

Navigating Menu Screens

Use the ESC key to navigate between menu screens.

Use the UP/DOWN arrow keys to scroll through the list of sub menus and commands on any screen.

➔ arrow indicates that there are sub menus containing user selectable commands.

Use the ENTER key to navigate to a sub menu and to select user configurable commands.

To access the overview status screen on the LCD press the ESC key.

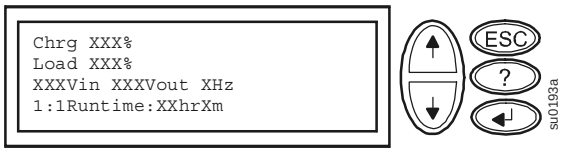

To access the main menu screen from the overview status screen, press the ENTER key.

Main Menu Screen
From the main menu screen it is possible to command, configure, and monitor the system using the sub menu screens: **Control, Status, Setup, Logging, Display, Diags and Help** (refer to sub menu screens section in this manual).

Use the UP/DOWN arrow keys to select the menu to be accessed.

Press the ENTER key to open a sub menu screen.

Menu Tree

The menu tree provides an overview of the top level menu screens.

Navigating sub menu screens

Use the UP/DOWN arrow keys to scroll through the list of functions and commands on a sub menu screen.

A ↓ after the last entry on a sub menu, indicates a continuation of the function/command list.

Use the UP/DOWN arrow keys to view the remaining entries in the list.

Use the ENTER key to select a command and move to sub menus associated with that function/command.

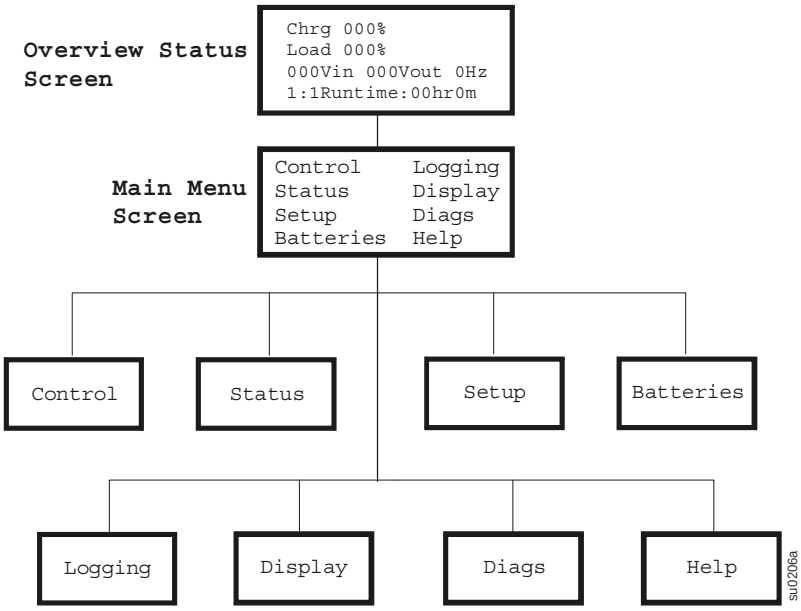

Sub menu screens

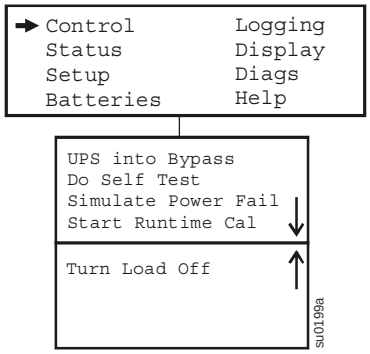

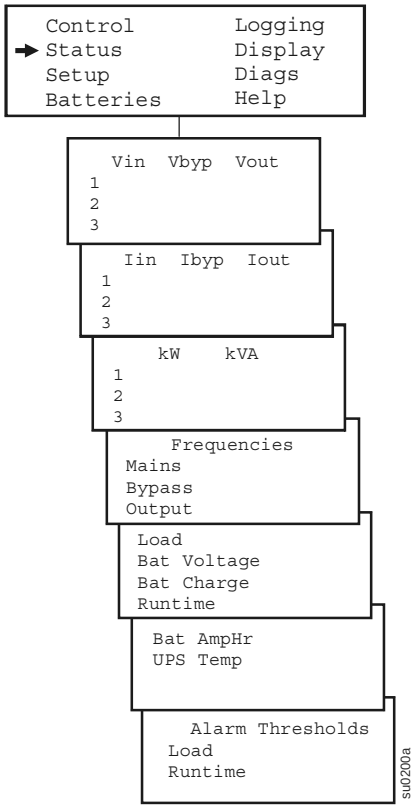

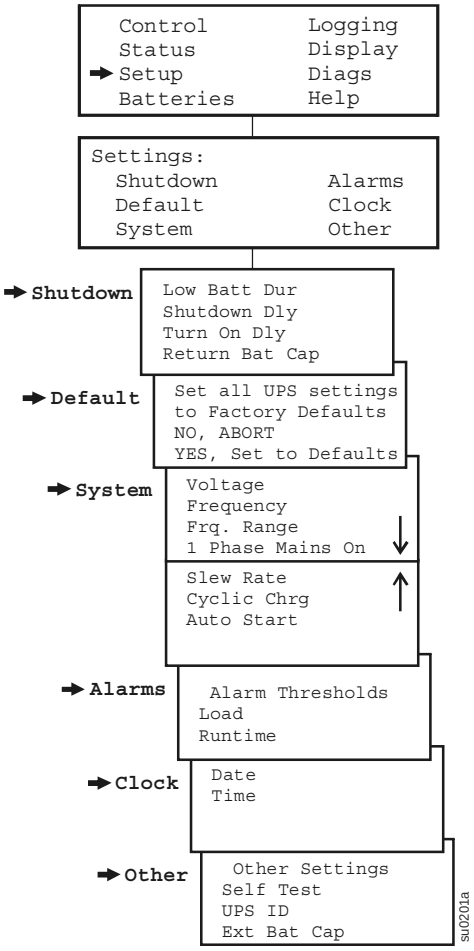

Output Frequency Options: Auto Sensing; 50 Hz; 60 Hz

50 Hz frequency range: 50±3 Hz; 50±0.1 Hz

60 Hz frequency range: 60±3 Hz; 60±0.1 Hz

Clock: The date and time functions are used to time stamp events in the event log. To avoid inaccuracies, change the time setting to reflect day light saving time where applicable.

Ext Bat Cap: Press ↵ . Use the UP/DOWN arrow keys to select the desired value. Press ↵ to move to the next digit. Press ↵ after selecting the final value, to lock in the battery capacity setting.

The PowerView will reference XLBP configuration in the following manner.

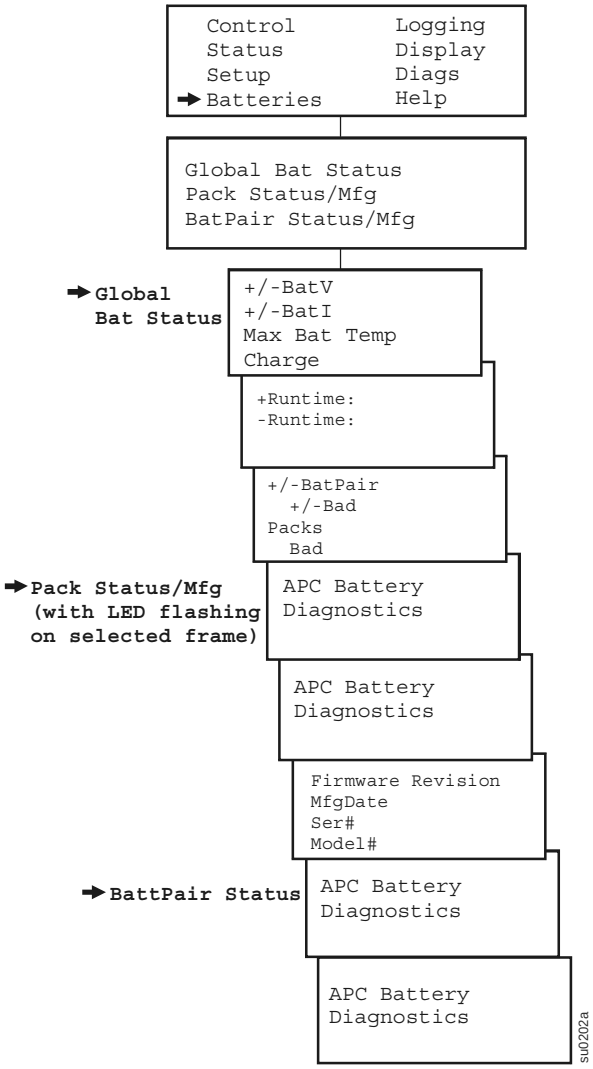

External Battery Pack			
BattPair_1		BattPair_2	
Module_1	Module_2	Module_3	Module_4
BattPair_3		BattPair_4	
Module_5	Module_6	Module_7	Module_8

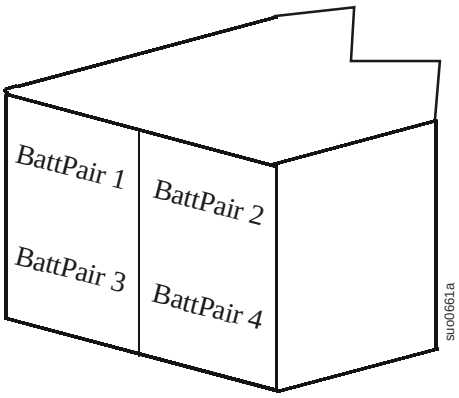

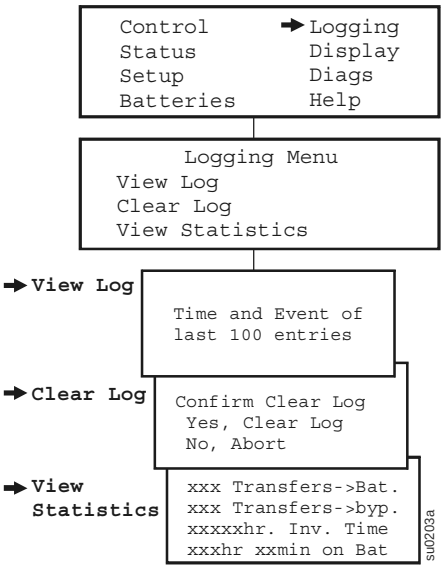

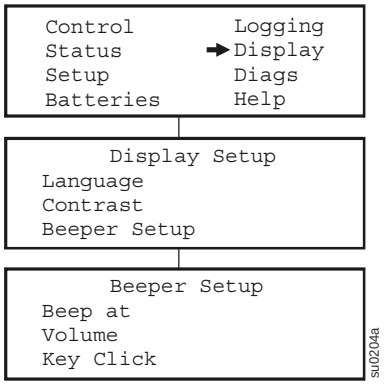

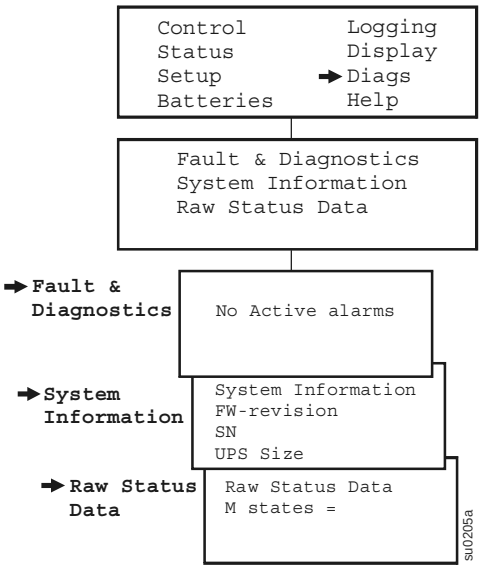

Start Up

Connect Load to UPS new format

1. The UPS features chassis ground connection screws located on the rear panel, for connecting the ground leads on transient voltage devices.
   Before connecting the ground cable be sure that the UPS is NOT connected to utility or battery power.
2. Connect equipment to the UPS.
   NOTE: This UPS is equipped with an external battery connector on the rear panel of the unit.
3. The battery charges to 90% capacity during the first three hours of normal operation. *Do* not expect full battery run capability during this initial charge period.
4. Refer to the APC by Schneider Electric web site, www.apc.com for battery runtimes.
5. Where appropriate use an APC by Schneider Electric extension battery cable. For ordering details contact your dealer or APC by Schneider Electric through the web site www.apc.com.
6. Add optional accessories to the SmartSlot located on the front panel.

For optimal computer system security, install PowerChute Smart-UPS monitoring software.

Connect Power to UPS and Load

1. Connect input power to the UPS.
2. Check the PowerView interface display for messages.
3. Turn on the load using the interface display menu.

Communication Port

Serial Port

Use only the supplied cable to connect to the serial port. A standard serial interface cable is incompatible with the UPS.

The serial port can be used to configure that Network Management Card.

Emergency Power Off

The output power can be disabled in an emergency by closing a switch connected to the emergency power off button (EPO).

Adhere to national and local electrical codes.

The switch should be connected in a normally open switch contact. External voltage is not required; the switch is driven by 12 V internal supply. In closed condition, 2 mA of current are drawn.

The EPO switch is internally powered by the UPS for use with non powered switch circuit breakers.

The EPO circuit is considered a Class 2 circuit, (UL, CSA standards) and an SELV circuit (IEC standard).

EPO port
located on rear panel

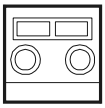

EPO connector

Strip the insulation from one end of each wire to be used for connecting the EPO.

Insert a screwdriver into the slot above the terminal to be wired. Insert the stripped wire into the terminal. Remove the screwdriver to secure the wire in the terminal. Repeat for each terminal.

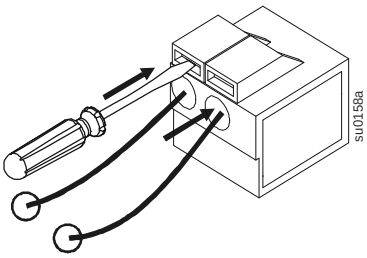

Both Class 2 and SELV circuits must be isolated from all primary circuitry. Do not connect any circuit to the EPO terminal block unless it can be confirmed that the circuit is Class 2 or SELV. If circuit standard cannot be confirmed, use a contact closure switch.

Use one of the following cable types to connect the UPS to the EPO switch.

- CL2: Class 2 cable for general use.
- CL2P: Plenum cable for use in ducts, plenums, and other spaces used for environmental air.
- CL2R: Riser cable for use in a vertical run in a floor to floor shaft.
- CLEX: Limited use cable for use in dwellings and for use in raceways.
- For installation in Canada: Use only CSA certified, type ELC, (extra low voltage control cable).
- For installation in other countries: Use standard low voltage cable in accordance with national and local regulations.

Troubleshooting Display Messages

Use the table below to solve minor installation and operation problems. Refer to the APC by Schneider Electric web site, www.apc.com for assistance with complex UPS problems.The PowerView reports various messages on the display, including alarm status and changes in system configuration. This section lists all the PowerView display messages, the reason for the message, and the appropriate corrective action.

Messages may occur simultaneously. If this happens, be sure to review all of the messages for a better understanding of the system condition.

Condition	PowerView Display Message	Reason for Message	Corrective Action
Start Up	#Batteries changed since last ON.	At least one battery module has been added or removed from the UPS since the last time the Pwr ON command was issued.	No corrective action necessary. Proceed with the start up.
	Automatic Self Test Started.	The UPS has started preprogrammed battery test.	
	Batt capacity less than Return Batt Cap.	The battery capacity of the UPS is less than the user specified minimum battery capacity required to turn on the load.	Option 1) Abort the start up and allow batteries to recharge. Option 2) Continue start up, with less than minimum battery capacity.
	System Start Up Configuration Failed.	System configuration error: Start up diagnostic fault.	Check for other alarms. If the problem persists contact APC by Schneider Electric Customer Support. Refer to *Contact Information* in this manual.
	Mains: Site Wiring Fault	Input and Output Jumpers are not configured correctly	Check input wiring tray jumpers and output shorting jumper for compatibility. Refer to the *Input/Output Jumper Configurations* table in this manual.
	Bypass Not Available - Wrong Ph Seq		Check bypass jumpers in input wiring tray and output shorting jumper for compatibility. Check bypass phases for positive sequence. Refer to the *Input/Output Jumper Configurations* table in this manual.
	Bypass: Site Wiring Fault		Check bypass jumpers in input wiring tray and output shorting jumper for compatibility. Refer to the *Input/Output Jumper Configurations* table in this manual.
General Status	# of batteries increased.	At least one battery pair has been added to the system.	No corrective action is necessary.
	# of batteries decreased.	At least one battery pair has been removed from the system.	
	# External Battery Packs increased.	At least one external battery pack has been connected to the UPS.	
	# External Battery Packs decreased.	At least one external battery pack has been disconnected from the UPS.	
Module Failure	Bad Battery Pair.	A battery pair has failed and requires replacement.	Refer to battery pair installation in the external battery pack user manual.

Condition	PowerView Display Message	Reason for Message	Corrective Action
Threshold Alarm	Load Power Is Above Alarm Limit.	The load has exceeded the user specified load alarm threshold.	Option 1) Use the display interface to raise the alarm threshold. Option 2) Reduce the load
	Load Is No Longer Above Alarm Threshold.	The load exceeded the alarm threshold. The situation has been corrected. Either because the load decreased or the threshold was increased.	No corrective action is necessary.
	Min Runtime Restored.	The system runtime dropped below the configured minimum and has been restored: 1) Additional battery modules were installed. 2) The existing battery modules were recharged. 3) The load was reduced. 4) The user specified threshold was decreased.	
General Fault	Need Bat Replacement.	One or more battery pairs are in need of replacement.	Refer to battery installation procedure.
	No Batteries Are Connected.	No battery power is available.	Check that batteries are installed and connected properly.
	Discharged Battery.	The UPS is on battery operation and the battery charge is low.	Shut down the system and the load or restore the incoming voltage.
	Low- Battery.	The UPS is on battery operation and the battery charge is low.	
	Weak Batt(s) Detected. Reduced Runtime.	One or more weak battery pairs detected (only applicable for internal battery modules).	Replace the weak battery pairs.
	Batt Temperature Exceeded Upper Limit.	The temperature of one or more battery packs has exceeded system specifications.	Contact APC by Schneider Electric Customer Support. Refer to *Contact Information* in this manual.
	Battery Over-Voltage Warning.	The battery voltage is too high and the charger has been deactivated.	
	Runtime Is Below Alarm Threshold.	The predicted runtime is lower than the user specified minimum runtime alarm threshold. Either the battery capacity has decreased, or the load has increased.	Option 1) Allow the batteries to recharge. Option 2) If possible, increase the number of battery modules. Option 3) Reduce the load. Option 4) Decrease the alarm threshold.
	Shutdown Due To Low Battery.	The UPS shutdown while on battery operation.	No corrective action is necessary. Note: Should this situation reoccur, consider increasing battery capacity.
	Bypass Not Available Input Freq/Volt out Of Range.	The frequency or voltage is out of acceptable range for bypass. This message occurs when the UPS is online.	Correct the input voltage to acceptable frequency or voltage.
	Mains Not Available. Input Frq/Volt Out of Range.	The frequency or voltage is out of acceptable range for normal operation.	
	Emergency PSU Fault.	Redundant Emergency Power Supply Unit (PSU) is not working. Internal diagnostic fault. The UPS will continue to operate normally.	Contact APC by Schneider Electric Customer Support. Refer to *Contact Information* in this manual.

Condition	PowerView Display Message	Reason for Message	Corrective Action
General Fault	Fan Fault	A fan has failed.	Contact APC by Schneider Electric Customer Support. Refer to *Contact Information* in this manual.
	Static Bypass Switch Fault.	The static bypass switch has failed.	
	System Failure Detected by Surveillance.	The system has detected an internal error.	Check for other alarms. If the problem persists contact APC by Schneider Electric Customer Support. Refer to *Contact Information* in this manual.
	System Not Synchronized to Bypass.	System cannot synchronize to bypass mode.Bypass mode may be unavailable.	Option 1) Decrease input frequency sensitivity. Contact APC by Schneider Electric Customer Support. Refer to *Contact Information* in this manual. Option 2) Correct bypass input voltage to provide acceptable frequency or voltage.
	UPS In Bypass Due To Fault.	The UPS has transferred to bypass mode due to a fault.	Contact APC by Schneider Electric Customer Support. Refer to *Contact Information* in this manual.
	UPS In Bypass Due To Overload.	The load has exceeded the power capacity.	Decrease the load.
	UPS Is Overloaded.	The load has exceeded the system power capacity.	Option 1) Decrease the load. Option 2) Check the load distribution on the three phases through the PowerView display. If the load is unevenly distributed, adjust the load distribution.

Maintenance

Replace battery modules

This UPS has replaceable battery modules. Replacement is a safe procedure, isolated from electrical hazards. You may leave the UPS and connected equipment on during the replacement procedure.

Once the batteries are disconnected the connected equipment is not protected from power outages.

Refer to the appropriate replacement battery user manual for battery module installation instructions. See your dealer or contact APC by Schneider Electric at **www.apc.com** for information on replacement battery modules.

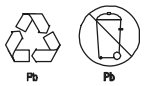

Be sure to deliver the used battery(s) to a recycling facility or ship it to APC by Schneider Electric in the replacement battery packing material.

Transport

1. Shut down and disconnect all connected equipment.
2. Disconnect the unit from utility power.
3. Disconnect all internal and external batteries (if applicable).
4. Follow the shipping instructions outlined in the *Service* section of this manual.

Service

If the unit requires service, do not return it to the dealer. Follow these steps:

1. Review the *Troubleshooting* section of the manual to eliminate common problems.
2. If the problem persists, contact APC by Schneider Electric Customer Support through the APC by Schneider Electric web site, **www.apc.com**.
   a. Note the model number and serial number and the date of purchase. The model and serial numbers are located on the rear panel of the unit and are available through the LCD display on select models.
   b. Call Customer Support and a technician will attempt to solve the problem over the phone. If this is not possible, the technician will issue a Returned Material Authorization Number (RMA#).
   c. If the unit is under warranty, the repairs are free.
   d. Service procedures and returns may vary internationally. Refer to the APC by Schneider Electric web site, **www.apc.com** for country specific instructions.
3. Pack the unit properly to avoid damage in transit. Never use foam beads for packaging. Damage sustained in transit is not covered under warranty.
   a. **Note: When shipping within the United States, or to the United States always DISCONNECT ONE UPS BATTERY before shipping in compliance with U.S. Department of Transportation (DOT) and IATA regulations.** The internal batteries may remain in the UPS.
   b. Batteries may remain connected in the XBP during shipment. Not all units utilize XLBPs.
4. Write the RMA# provided by Customer Support on the outside of the package.
5. Return the unit by insured, prepaid carrier to the address provided by Customer Support.

Limited Factory Warranty

Schneider Electric IT Corporation (SEIT), warrants its products to be free from defects in materials and workmanship for a period of two (2) years from the date of purchase. The SEIT obligation under this warranty is limited to repairing or replacing, at its own sole option, any such defective products. Repair or replacement of a defective product or parts thereof does not extend the original warranty period.

This warranty applies only to the original purchaser who must have properly registered the product within 10 days of purchase. Products may be registered online at warranty.apc.com.

SEIT shall not be liable under the warranty if its testing and examination disclose that the alleged defect in the product does not exist or was caused by end user or any third person misuse, negligence, improper installation, testing, operation or use of the product contrary to SEIT recommendations or specifications. Further, SEIT shall not be liable for defects resulting from: 1) unauthorized attempts to repair or modify the product, 2) incorrect or inadequate electrical voltage or connection, 3) inappropriate on site operation conditions, 4) Acts of God, 5) exposure to the elements, or 6) theft. In no event shall SEIT have any liability under this warranty for any product where the serial number has been altered, defaced, or removed.

EXCEPT AS SET FORTH ABOVE, THERE ARE NO WARRANTIES, EXPRESS OR IMPLIED, BY OPERATION OF LAW OR OTHERWISE, APPLICABLE TO PRODUCTS SOLD, SERVICED OR FURNISHED UNDER THIS AGREEMENT OR IN CONNECTION HEREWITH.

SEIT DISCLAIMS ALL IMPLIED WARRANTIES OF MERCHANTABILITY, SATISFACTION AND FITNESS FOR A PARTICULAR PURPOSE.

SEIT EXPRESS WARRANTIES WILL NOT BE ENLARGED, DIMINISHED, OR AFFECTED BY AND NO OBLIGATION OR LIABILITY WILL ARISE OUT OF, SEIT RENDERING OF TECHNICAL OR OTHER ADVICE OR SERVICE IN CONNECTION WITH THE PRODUCTS.

THE FOREGOING WARRANTIES AND REMEDIES ARE EXCLUSIVE AND IN LIEU OF ALL OTHER WARRANTIES AND REMEDIES. THE WARRANTIES SET FORTH ABOVE CONSTITUTE SEIT SOLE LIABILITY AND PURCHASER EXCLUSIVE REMEDY FOR ANY BREACH OF SUCH WARRANTIES. SEIT WARRANTIES EXTEND ONLY TO ORIGINAL PURCHASER AND ARE NOT EXTENDED TO ANY THIRD PARTIES.

IN NO EVENT SHALL SEIT, ITS OFFICERS, DIRECTORS, AFFILIATES OR EMPLOYEES BE LIABLE FOR ANY FORM OF INDIRECT, SPECIAL, CONSEQUENTIAL OR PUNITIVE DAMAGES, ARISING OUT OF THE USE, SERVICE OR INSTALLATION OF THE PRODUCTS, WHETHER SUCH DAMAGES ARISE IN CONTRACT OR TORT, IRRESPECTIVE OF FAULT, NEGLIGENCE OR STRICT LIABILITY OR WHETHER SEIT HAS BEEN ADVISED IN ADVANCE OF THE POSSIBILITY OF SUCH DAMAGES. SPECIFICALLY, SEIT IS NOT LIABLE FOR ANY COSTS, SUCH AS LOST PROFITS OR REVENUE, WHETHER DIRECT OR INDIRECT, LOSS OF EQUIPMENT, LOSS OF USE OF EQUIPMENT, LOSS OF SOFTWARE, LOSS OF DATA, COSTS OF SUBSTITUANTS, CLAIMS BY THIRD PARTIES, OR OTHERWISE.

NOTHING IN THIS LIMITED WARRANTY SHALL SEEK TO EXCLUDE OR LIMIT SEIT LIABILITY FOR DEATH OR PERSONAL INJURY RESULTING FROM ITS NEGLIGENCE OR ITS FRAUDULENT MISREPRESENTATION OF TO THE EXTENT THAT IT CANNOT BE EXCLUDED OR LIMITED BY APPLICABLE LAW.

To obtain service under warranty you must obtain a Returned Material Authorization (RMA) number from customer support. Customers with warranty claims issues may access the SEIT worldwide customer support network through the APC web site: **www.apc.com**. Select your country from the country selection drop down menu. Open the Support tab at the top of the web page to obtain information for customer support in your region. Products must be returned with transportation charges prepaid and must be accompanied by a brief description of the problem encountered and proof of date and place of purchase.

APC™ by Schneider Electric
Worldwide Customer Support

Customer support for this or any other APC™ by Schneider Electric product is available at no charge in any of the following ways:

- Visit the APC by Schneider Electric web site, www.apc.com to access documents in the APC Knowledge Base and to submit customer support requests.
  - **www.apc.com** (Corporate Headquarters)
    Connect to localized APC by Schneider Electric web site for specific countries, each of which provides customer support information.
  - **www.apc.com/support/**
    Global support searching APC Knowledge Base and using e-support.
- Contact the APC by Schneider Electric Customer Support Center by telephone or e-mail.
  - Local, country specific centers: go to **www.apc.com/support/contact** for contact information.
  - For information on how to obtain local customer support, contact the APC by Schneider Electric representative or other distributor from whom you purchased your APC by Schneider Electric product.

© 2014 APC by Schneider Electric. APC, the APC logo, Smart-UPS and PowerChute are owned by Schneider Electric Industries S.A.S., or their affiliated companies. All other trademarks are property of their respective owners.