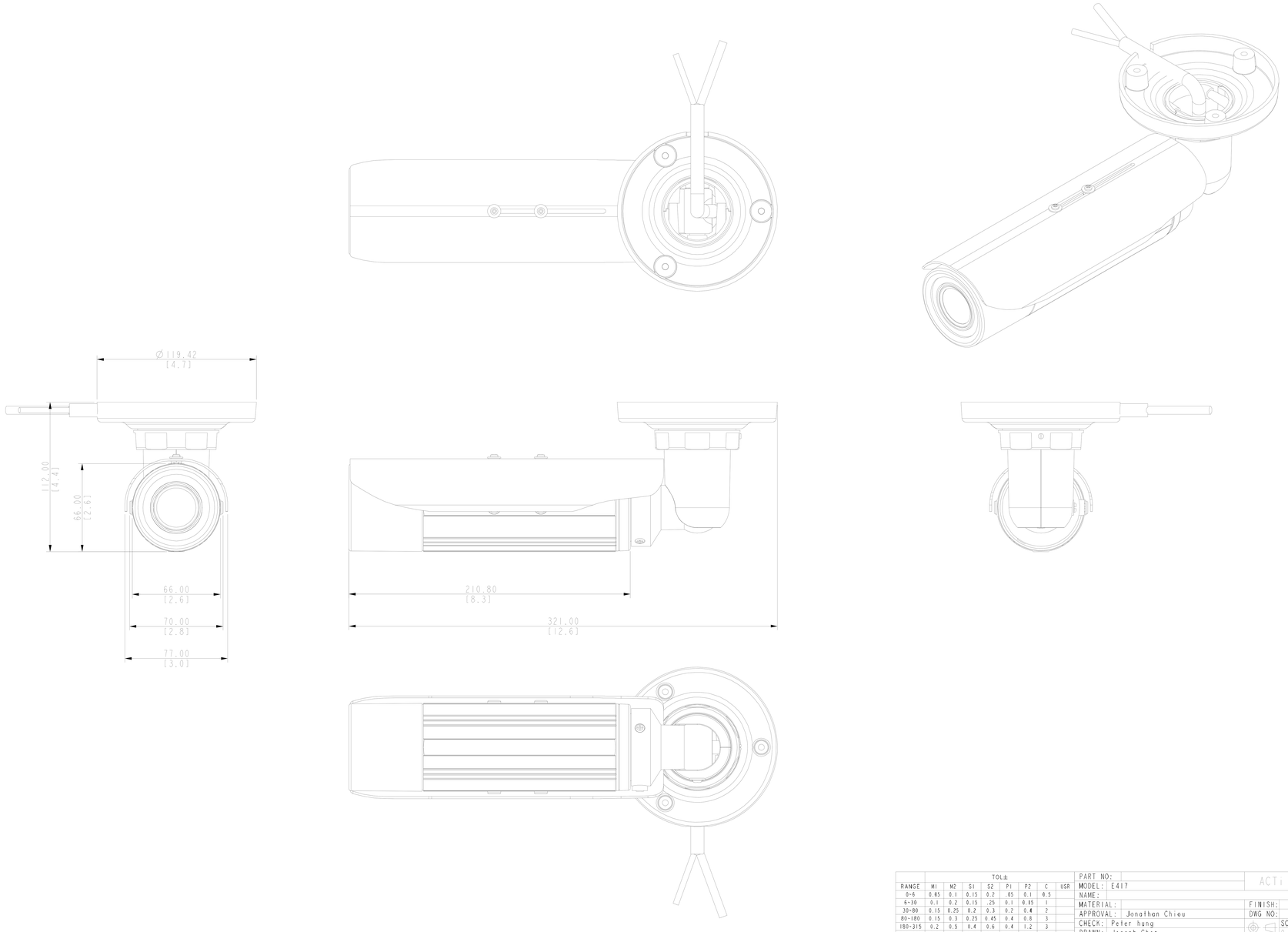

	TOL±							
RANGE	M1	M2	S1	S2	P1	P2	C	USR
0~6	0.65	0.1	0.15	0.2	.05	0.1	0.5	
6~30	0.1	0.2	0.15	.25	0.1	0.15	1	
30~80	0.15	0.25	0.2	0.3	0.2	0.4	2	
80~180	0.15	0.3	0.25	0.45	0.4	0.8	3	
180~315	0.2	0.5	0.4	0.6	0.4	1.2	3	
315~800	0.3	0.8	0.7	1.1	0.6	1.5	4	
ANG. TOL±	0°~30°	0.2°	30°~60°	0.2°	60°~90°	1°		

PART NO:		ACTi Corporation	
MODEL:	E417		
NAME:		DATE:	2014/08/05
MATERIAL:		FINISH:	
APPROVAL:	Jonathan Chiou	DWG NO:	
CHECK:	Peter hung	SCALE / SHEET	REV. / UNIT
DRAWN:	Joseph Chen	0.500 / 1/1	MM